ABB

3HAB 0009-55/Rev.1

Product Manual IRB 6400

Article number: 3HAB 0009-55
Issue: M94A/Rev. 1

ABB Robotics Products AB
S-721 68 Västerås
Sweden

CONTENTS

CONTENTS

Page

Introduction

1 How to use this Manual

This manual provides information on installation, preventive maintenance, trouble-shooting and how to carry out repairs on the manipulator and controller. Its intended audience is trained maintenance personnel with expertise in both mechanical and electrical systems. The manual does not in any way assume to take the place of the maintenance course offered by ABB Robotics.

Anyone reading this manual should also have access to the User's Guide.

The chapter entitled System Description provides general information on the robot structure, such as its computer system, input and output signals, etc.

How to assemble the robot and install all signals, etc., is described in the chapter on Installation and Commissioning.

If an error should occur in the robot system, you can find out why it has happened in the chapter on Troubleshooting. If you receive an error message, you can also consult the chapter on Error Messages. It is very helpful to have a copy of the circuit schedule at hand when trying to locate cabling faults.

Servicing and maintenance routines are described in the chapter on Maintenance.

2 What you must know before you use the Robot

- Normal maintenance and repair work usually only require standard tools. Some repairs, however, require specific tools. These repairs, and the type of tool required, are described in more detail in the chapter Repairs.
- The power supply must always be switched off whenever work is carried out in the controller cabinet. Note that even though the power is switched off, the orange-coloured cables may be live. The reason for this is that these cables are connected to external equipment and are consequently not affected by the mains switch on the controller.
- Circuit boards - printed boards and components - must never be handled without Electro-Static-Discharge (ESD) protection in order not to damage them. Use the carry band located on the inside of the controller door.

All personnel working with the robot system must be very familiar with the safety regulations outlined in the chapter on Safety in the User's Guide. Incorrect operation can damage the robot or injure someone.

3 Identification

Identification plates indicating the type of robot and manufacturing number, etc., are located on the rear of the manipulator's lower arm (see Figure 1) and on the front of the controller above the operator's panel (see Figure 2).

The installation and system diskettes are also marked with the robot type and manufacturing number (see Figure 3).

.

ABB Robotics Made in Sweden

Type-Manufacturing no. M94A

Nom load see instructions

Net weight IRB 6400 /

2.4-120	: 1825 KG
2.4-150, 2.8-120	: 1950 KG
3.0-75	: 1950 KG
S /2.9-120	: 2450 KG
PE /2.25-75	: 1524 KG

Type: IRB 6400 /2.4-120

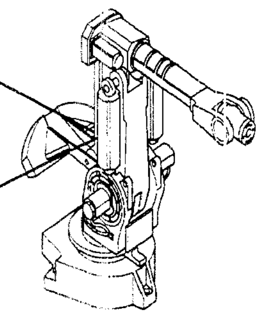

Figure 1 Identification plate on the manipulator.

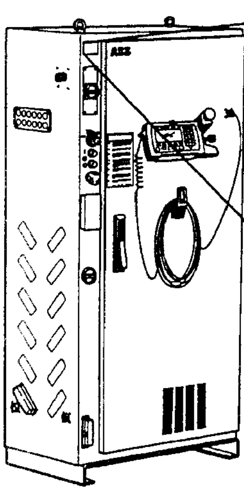

ABB Robotics Made in Sweden

Type	**IRB 6400/M94A**
Voltage	**3 x 475 V**
Frequency	**50-60 Hz**
Power	**6.7 kVA**
Ref.No	**RXXX XXXX**
Man.No	**A 31023**
Net weight	**300 kg**

Type: 6400 /2.4-120

6400-XXXX

Label with type

Label with manufacturing number.

Figure 2 Identification plates on the controller.

ABB

S4/SpotWare 2.0
Program No 3HAB XXXX-X
Boot Disk 1 (4)
Serial No IRB 6400-XXXX

Property of ABB Västerås/Sweden. All rights reserved. Reproduction, modification, use or disclosure to third parties without express authority is strictly forbidden. Copyright 1993.
Authorized to be used in the controllers with the above stated serial.

ABB Robotics Products AB

Figure 3 Example of a label on a system diskette.

NB.

In the Product Manual You can find two different Product Specifications.
3HAB 0001-XX Robots equipped with M94A software
3HAB 0001-XX M94A Robots equipped with RobotWare 2.0.

Use the one that corresponds to Your software version. Which one You have You can see in the "Welcome window" on the teach pendant, when switching the power on.

Product Specification
IRB 6400

3HAB 5859-1
M94A/RobotWare 2.0

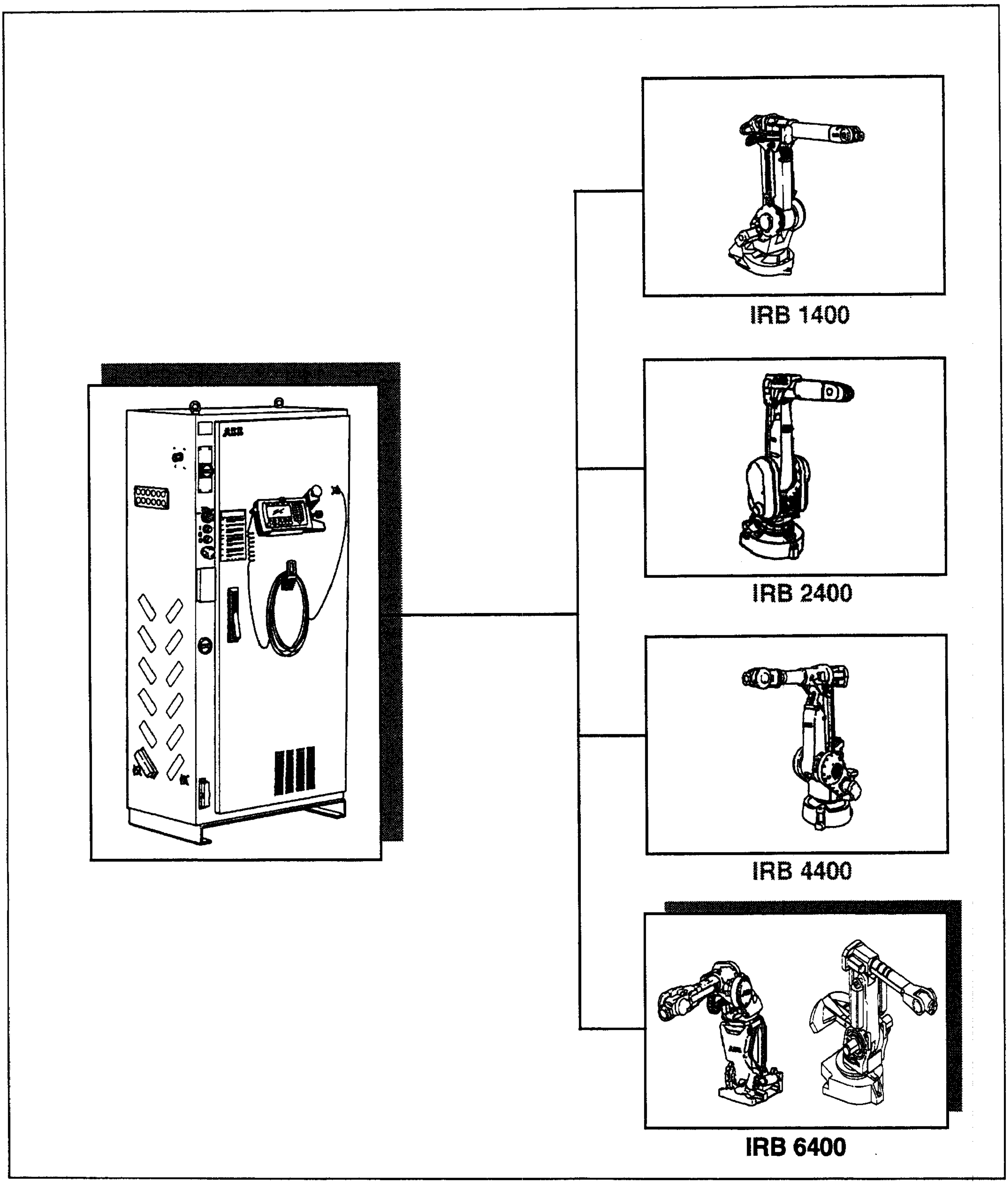

ABB Robotics Products

Article number: 3HAB 5859-1
Issue: M94A/RobotWare 2.0

ABB Robotics Products AB
S-721 68 Västerås
Sweden

CONTENTS

1 Introduction

IRB 6400 is a 6-axis industrial robot, designed specifically for manufacturing industries that use flexible robot-based automation. The robot has built-in process ware, an open structure that is specially adapted for flexible use, and can communicate extensively with external systems.

All features are not described in this document. For a more complete and detailed description, please see the User's Guide and Product Manual, or contact your nearest ABB Flexible Automation Centre.

The IRB 6400 comes in several different versions, with handling capacities of up to 150 kg, a maximum reach of 3 m, floor- or shelf-mounted manipulators as well as manipulators for harsh environments.

IRB 6400C is a compact robot for small spaces and gives an opportunity to install robots close together or close to surrounding equipment.

Extra equipment, such as transformers and valve packages can be placed on the upper arm or on the base of the manipulator.

Accessories, such as track motion, base plates, motors for external axes, cabling for spot welding guns, and tool systems with tool exchangers, have been specially adapted for use in the IRB 6400.

Different robot versions

The IRB 6400, as mentioned above, is available in several different versions, depending on its arm length, handling capacity or the way it is mounted. The following different robot types are available:

Robot Versions	
IRB 6400/ 2.4-120	IRB 6400F/ 2.8-120
IRB 6400/ 2.4-150	IRB 6400FS/ 2.9-120
IRB 6400/ 2.8-120	IRB 6400C/ B-120
IRB 6400/ 3.0-75	IRB 6400C/ B-150
IRB 6400S/ 2.9-120	IRB 6400C/ R-120
IRB 6400PE/ 2.25 -75	IRB 6400C/ R-150
IRB 6400F/ 2.4-120	IRB 6400C/ L-120
IRB 6400F/ 2.8-120	IRB 6400C/ L-150

Definition of version designation

IRB 6400 Application, Mounting/ Reach - Handling capacity

How to use this manual

	Prefix	Description
Application	PE	Robot adapted for poke welding
	F	Manipulator adapted for use in harsh environments (e.g. foundry)
Mounting	-	Floor-mounted manipulator
	S	Shelf-mounted manipulator
Reach	x.x	Indicates the maximum reach at wrist centre
Compact version	C	(B) Bend-Back, (R)Turn-Back Right Side, (L) Turn-Back Left Side
Handling capacity	yyy	Indicates the maximum handling capacity

The characteristics of the robot are described in Chapter 2: *Description*

The most important technical data is listed in Chapter 3: *Technical specification.*

To make sure that you have ordered a robot with the correct functionality, see Chapter 4: *Specification of Variants and Options.*

In Chapter 5 you will find accessories for the robot.

Chapter 6 contains an *Index*, to make things easier to find.

Other manuals

The Basic Operation manual contains an introduction to the basic operation and programming of the robot. It is recommended to use this manual as a tutorial, together with a robot or the PC software *QuickTeach*™.

The User's Guide is a reference manual with step by step instructions on how to perform various tasks.

The programming language is described in the RAPID Reference Manual.

The Product Manual describes how to install the robot, as well as maintenance procedures and troubleshooting.

2 Description

2.1 Structure

The robot is made up of two main parts: a manipulator and a controller.

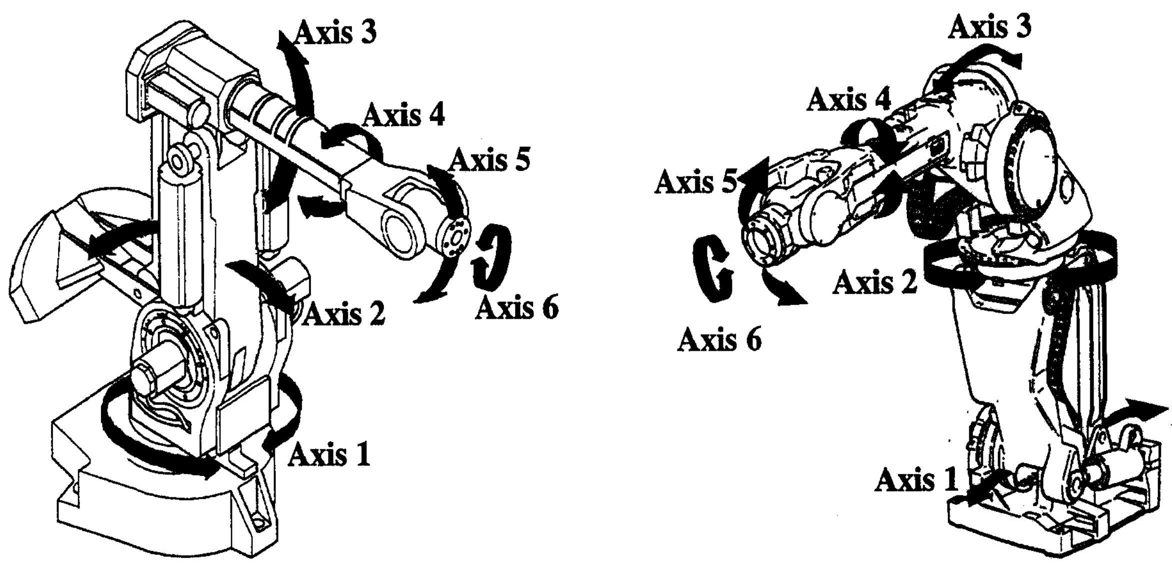

Figure 1 The IRB 6400 manipulator has 6 axes (IRB 6400C is shown to the right).

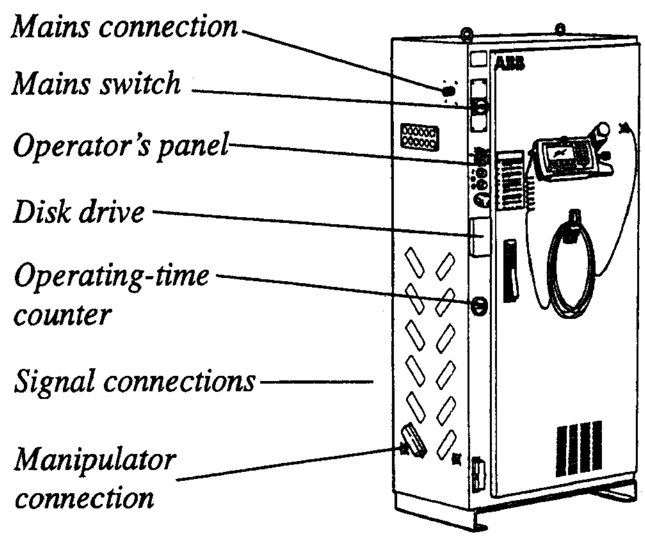

Figure 2 The controller is specifically designed to control robots, which means that optimal performance and functionality is achieved.

The controller contains the electronics required to control the manipulator, external axes and peripheral equipment.

2.2 Safety/Standards

The robot complies fully with the health and safety standards specified in the EEC's machinery directives as well as ANSI/RIA 15.06-1992.

The robot is designed with absolute safety in mind. It has a dedicated safety system based on a two-channel circuit which is monitored continuously. If an error occurs, the electrical power supplied to the motors shuts off and the brakes engage.

The robot can be moved using a joystick without having to look at the teach pendant to find the right key.

Selecting the operating mode
The robot can be operated either manually or automatically. In manual mode, the robot can only be operated via the teach pendant, i.e. not by any external equipment.

Reduced speed
In manual mode, the speed is limited to a maximum of 250 mm/s (600 inches/min.). A speed limitation applies not only to the TCP, but to all parts of the robot. It is also possible to monitor the speed of equipment mounted on the robot.

Overspeed protection
The speed of the robot is monitored by two independent computers.

Emergency stop
There is one emergency stop push button on the controller, and another on the teach pendant. Additional emergency stop buttons can be connected to the robot's safety chain circuit.

Safeguarded space stop
The robot has a number of electrical inputs which can be used to connect external safety equipment, such as safety gates and light curtains. This allows the robot's safety functions to be activated both by peripheral equipment and by the robot itself.

Delayed safeguarded space stop
A delayed stop gives a smooth stop. The robot stops in the same way as a normal program stop with no deviation from the programmed path. After 1-2 seconds the power supplied to the motors shuts off.

Restricting the working space.
The movement of each axis can be restricted using software limits. Axes 1-3 can also be restricted by means of mechanical stops.

Enabling device
The enabling device on the teach pendant must be used to move the robot when in manual mode. The enabling device consists of a switch with three positions, meaning that all robot movements stop when either the enabling device is pushed fully in, or when it is released completely. This makes the robot safer to operate.

Hold-to-run control
"Hold-to-run" means that you must depress the Program start key in order to move the robot. When the key is released the robot will stop. The hold-to-run function makes program testing safer.

2.3 Operation

All operations and programming can be carried out using the portable teach pendant (see Figure 3) and the operator's panel (see Figure 5).

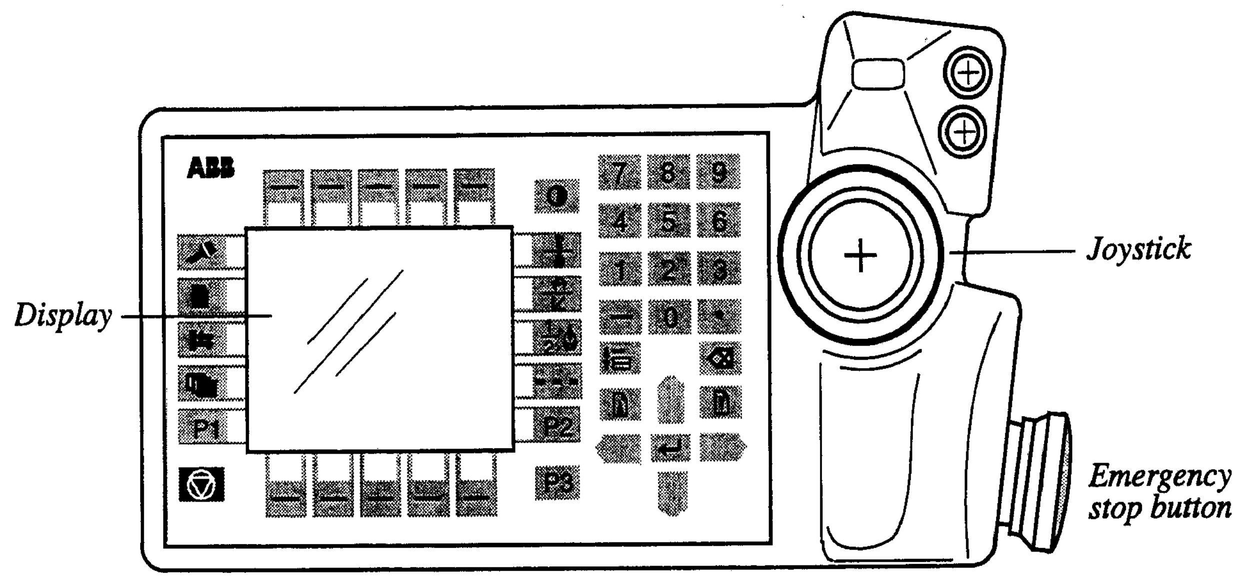

Figure 3 The teach pendant is equipped with a large display, which displays prompts, information, error messages and other information in plain English.

Information is presented on a large display using windows, pull-down menus, dialogs and function keys. No previous programming or computer experience is required to learn how to operate the robot. All operation can be carried out via the teach pendant, which means that a specific keyboard is not required. All information, including the complete programming language, is written in English or, if preferred, some other major language.

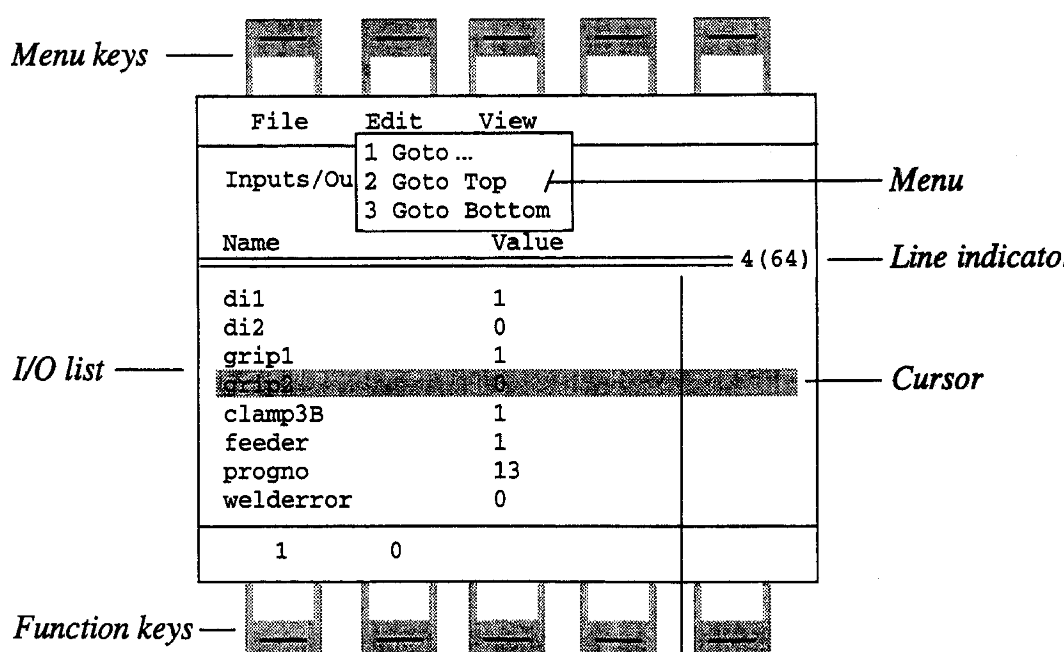

Figure 4 Window for manual operation of input and output signals.

Using the joystick, the robot can be manually jogged (moved). The user determines the speed of this movement; large deflections of the joystick will move the robot quickly, smaller deflections will move it more slowly.

The robot supports different user levels, with dedicated windows for:

- Production
- Programming
- Service and installation

Operator's panel

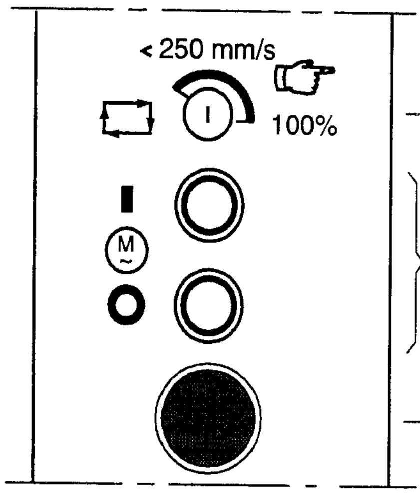

Figure 5 The operating mode is selected using the operator's panel on the controller.

Using a key switch, the robot can be locked in three different operating modes:

• Automatic mode:	Running production
• Manual mode at reduced speed:	Programming and setup Max. speed: 250 mm/s (600 inches/min.)
• Manual mode at full speed:	Testing at full program speed

Both the operator's panel and the teach pendant can be mounted externally, i.e. outside the cabinet. The robot can then be controlled from there.

The robot can be remotely controlled from a computer, PLC or from a customer's panel using serial communication or digital system signals.

2.4 Installation

The robot has a standard configuration and can be operated immediately after installation. Its configuration is displayed in plain language and can easily be changed using the teach pendant. The configuration can be stored on a diskette and/or transferred to other robots that have the same characteristics.

All the versions of IRB 6400 are designed for floor mounting except one version for shelf-mounting. An end effector, weighing maximum 150 kg including payload, can be mounted on the mounting flange (axis 6).

Extra loads (valve packages, transformers) can be mounted on the upper arm as well as on the frame of axis 1. (Not possible on IRB 6400C.)

The working range of axes 1-3 can be limited by mechanical stops. Position switches can be supplied on axis 1 for position indication of manipulator. For IRB 6400C position switches can be supplied on axis 2 and 3.

2.5 Programming

Programming the robot involves choosing instructions and arguments from lists of appropriate alternatives. Users do not need to remember the format of instructions, since they are prompted in plain English. "See and pick" is used instead of "remember and type".

The programming environment can easily be customized using the teach pendant.

- The language used on your shop floor can be used to give your own names to programs, signals, counters, etc.
- New instructions can easily be written.
- The most common instructions can be assembled in easy-to-use pick lists.
- Positions, registers, tool data or other data can be created, and new data will be automatically named.

Programs, parts of programs and any modifications can be tested immediately without having to translate the program.

The program is stored as a normal PC text file, which means that it can be edited using a standard PC.

Movements

A sequence of movements is programmed as a number of partial movements between the positions to which you want the robot to move.

The positions of a motion instruction are selected either by manually jogging the robot to the desired position with the joystick, or by referring to a position defined earlier.

The exact position can be defined (see Figure 6) as

- a stop point, i.e. the robot reaches the programmed position; or
- a fly-by point, i.e. the robot turns close to the programmed position. The size of the deviation is defined independently for the TCP and for the orientation of the tool and external axes.

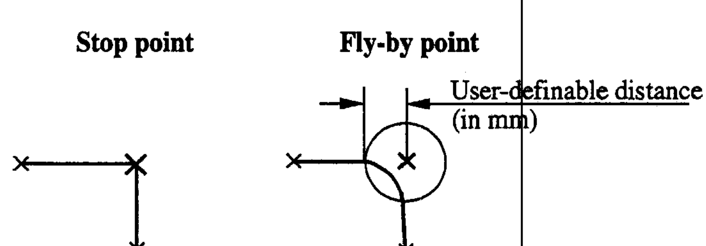

Figure 6 The fly-by point reduces the cycle time since the robot does not reach the programmed point.

The velocity may be specified in the following units:

- mm/s
- seconds (time it takes to reach the next programmed position)
- degrees/s (for reorientation of the tool or for a rotation of an external axis)

Program management

For convenience, the programs can be named and stored in different directories.

Areas of the robot's program memory can also be used for program storage. This gives a very fast memory where you can store programs. The complete program or parts of programs can be transferred to/from a diskette.

Programs can be printed on a printer connected to the robot, or transferred to a PC where they can be edited or printed.

Editing programs

Programs can be edited using standard editing commands, i.e. "cut-and-paste", copy, delete, find and change, etc. Individual arguments in an instruction can also be edited using these commands.

No reprogramming is necessary when processing left-hand and right-hand parts, since the program can be mirrored in any plane.

A robot position can easily be changed either by

- jogging the robot with the joystick to a new position and then pressing the "ModPos" key (this registers the new position), or by
- entering or displacing numeric values.

To prevent unauthorised personnel making program changes, passwords can be used.

Testing programs

Several helpful functions can be used when testing programs. For example, it is possible to

- start from any instruction;
- execute an incomplete program;
- run one cycle;
- execute forward/backward step-by-step;
- simulate wait conditions;
- temporarily reduce the speed;
- change a position.

2.6 Automatic Operation

A dedicated production window with commands and information required by the operator is automatically displayed during automatic operation.

The operation procedure can be customized to suit the robot installation by means of user-defined operating dialogs.

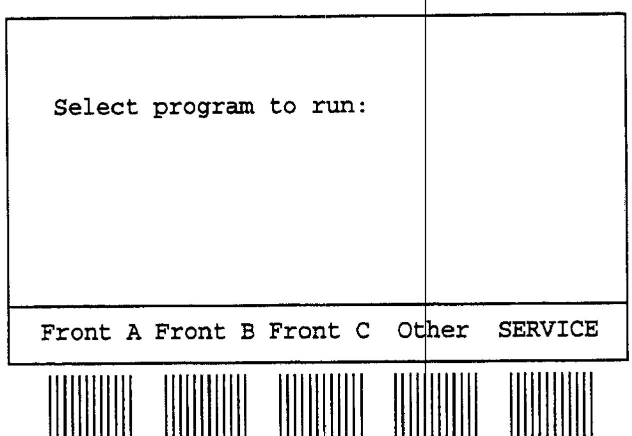

Figure 7 The operator dialogs can easily be customized.

A special input can be set to order the robot to go to a service position. After service, the robot is ordered to return to the programmed path and continue program execution.

You can also create special routines that will be automatically executed when the power is switched on, on restarts and on other occasions. This allows you to customize each installation and to make sure that the robot is started up in a controlled way.

The robot is equipped with absolute measurement, making it possible to operate the robot directly from when the power is switched on. For your convenience, the robot saves the used path, program data and configuration parameters so that the program can easily be restarted from where you left off. Digital outputs are also set automatically to the value before the power failure.

Production statistics can be generated:

- Data (e.g. number of parts produced) can be written to a file and processed in a PC at a later stage.
- Status changes and reasons for downtime are logged automatically.

Thanks to the robot's efficiency in handling error situations, most faults can be detected and dealt with automatically without having to call the operator.

2.7 Maintenance and Troubleshooting

The robot requires only a minimum of maintenance during operation. It has been designed to make it as easy to service as possible:

- The controller is enclosed, which means that the electronic circuitry is protected when operating in a normal workshop environment.
- Maintenance-free AC motors are used.
- Liquid grease or oil is used for the main gear boxes.
- The cabling is routed for longevity, and in the unlikely event of a failure, its modular design makes it easy to change.
- It has a program memory "battery low" alarm.

The robot has several functions to provide efficient diagnostics and error reports:

- It performs a self test on start up.
- Errors are indicated by an error message displayed in plain language. The message includes the reason for the fault and suggests recovery action.
- A board error is indicated by an LED on the faulty unit.
- Faults and major events are logged and timestamped. This makes it possible to detect error chains and provides the background for any downtime. The log can be read on the display of the teach pendant, stored in a file and also printed on a printer.
- There are commands and service programs in RAPID to test units and functions.
- The robot signals are assembled in the form of 128 measuring points.
- The Product Manual includes a troubleshooting guide with step-by-step instructions.

Most errors detected by the user program can also be reported to and handled by the standard error system. Error messages and recovery procedures are displayed in plain language. These messages can easily be changed and information can be added to suit a specific robot installation.

2.8 Robot Motion

Floor-mounted

Dimensions apply to
IRB 6400/ 3.0-75

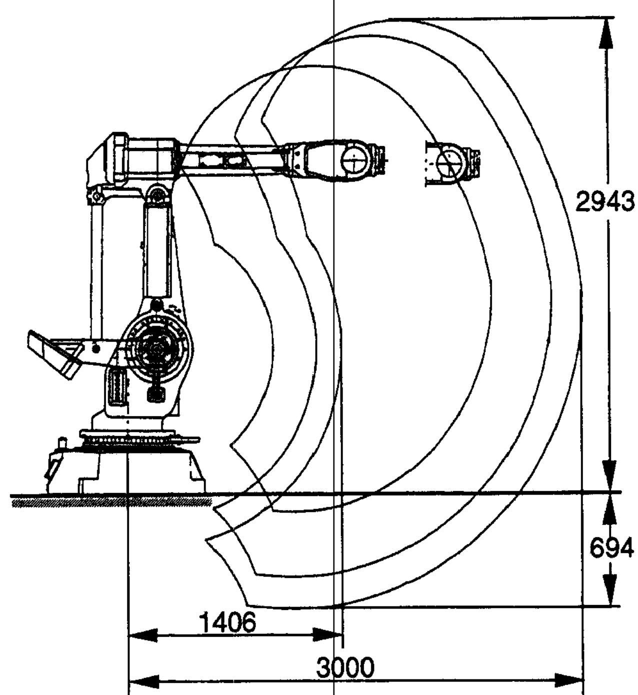

Shelf-mounted

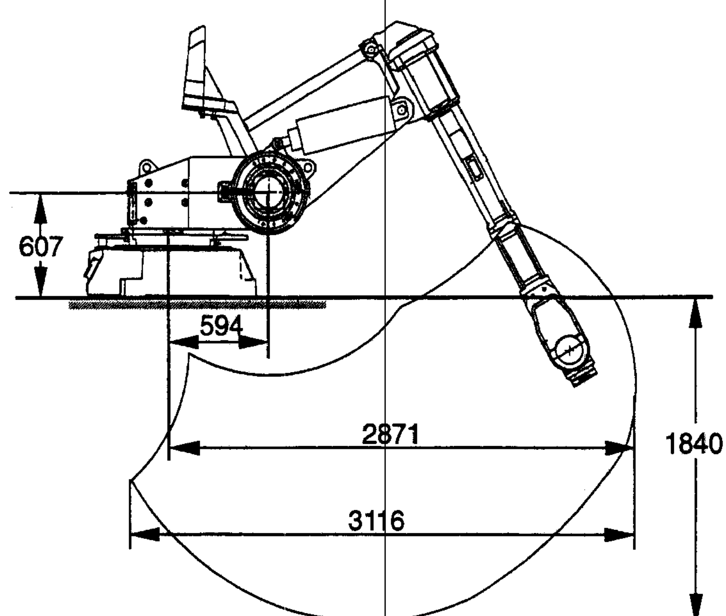

Figure 8 Working space of IRB 6400 and IRB 6400S (dimensions in mm).

IRB 6400C

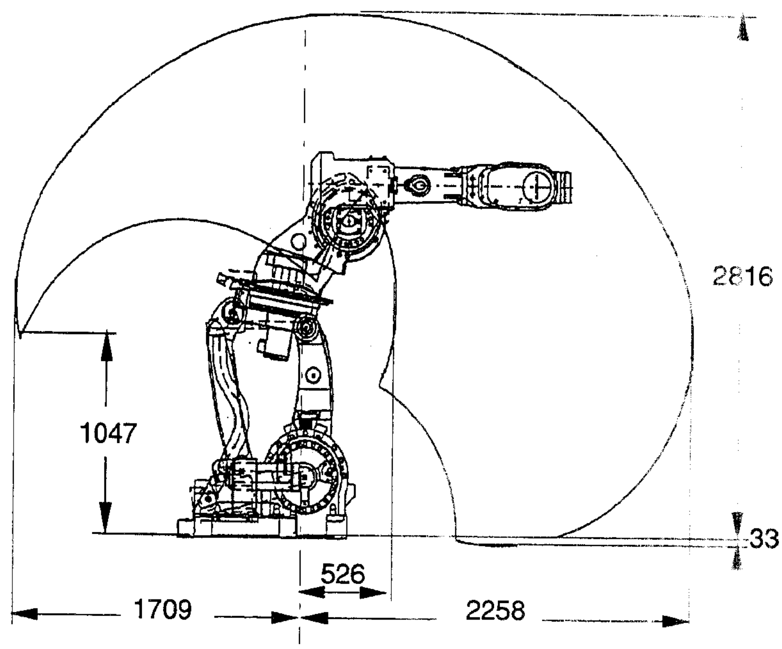

Figure 9 Working space of the IRB 6400C Bend-Back version (dimensions in mm).

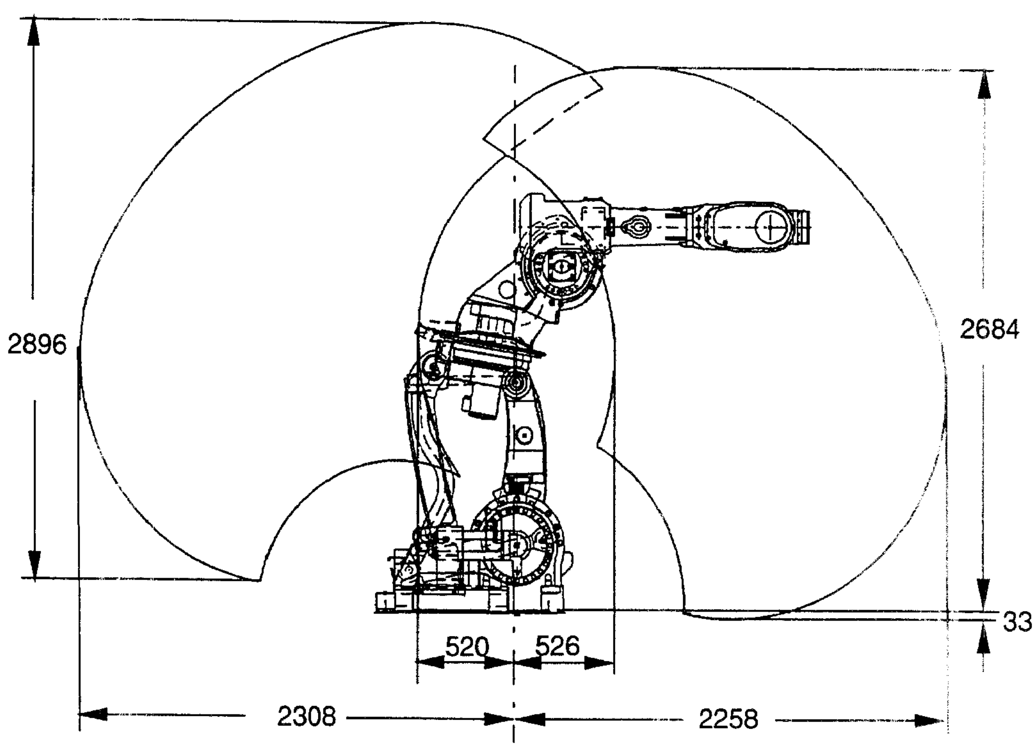

Figure 10 Working space of the IRB 6400C Turn-Back Right side and Left side version (dimensions in mm).

Motion performance

The QuickMove^{TM} concept means that a self-optimizing motion control is used. The robot automatically optimizes the servo parameters to achieve the best possible performance throughout the cycle - based on load properties, location in working area, velocity and direction of movement.

- No parameters have to be adjusted to achieve correct path, orientation and velocity.
- Maximum acceleration is always obtained (acceleration can be reduced, e.g. when handling fragile parts).
- The number of adjustments that have to be made to achieve the shortest possible cycle time are minimized.

The TrueMove™ concept means that the programmed path is followed – regardless of the speed or operating mode – even after an emergency stop, a safeguarded stop, a process stop, a program stop or a power failure.

The robot can, in a controlled way, pass through singular points, i.e. points where two axes coincide.

Coordinate systems

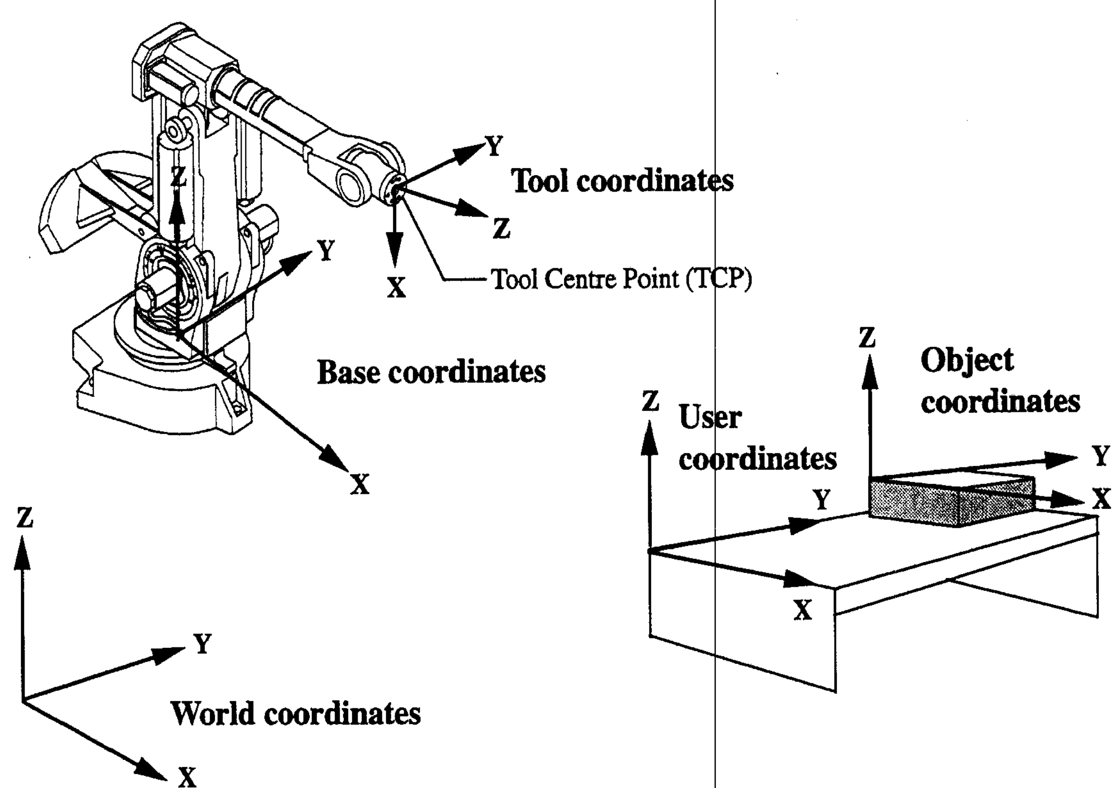

Figure 11 The coordinate systems, used to make jogging and off-line programming easier.

The world coordinate system defines a reference to the floor, which is the starting point for the other coordinate systems. Using this coordinate system, it is possible to relate the robot position to a fixed point in the workshop. The world coordinate system is also very useful when two robots work together or when using a robot carrier.

The base coordinate system is referenced to the base mounting surface of the robot.

The tool coordinate system specifies the tool's centre point and orientation.

The user coordinate system specifies the position of a fixture or workpiece manipulator.

The object coordinate system specifies how a workpiece is positioned in a fixture or workpiece manipulator.

The coordinate systems can be programmed by specifying numeric values or jogging the robot through a number of positions (the tool does not have to be removed).

Each position is specified in object coordinates with respect to the tool's position and orientation. This means that even if a tool is changed because it is damaged, the old program can still be used, unchanged, by making a new definition of the tool.
If a fixture or workpiece is moved, only the user or object coordinate system has to be redefined.

Stationary TCP

When the robot is holding a work object and working on a stationary tool, it is possible to define a TCP for that tool. When that tool is active, the programmed path and speed are relatedto the work object.

Program execution

The robot can move in any of the following ways:

- Joint motion (all axes move individually and reach the programmed position at the same time)
- Linear motion (the TCP moves in a linear path)
- Circle motion (the TCP moves in a circular path)

If the location of a workpiece varies from time to time, the robot can find its position by means of a digital sensor. The robot program can then be modified in order to adjust the motion to the location of the part.

Jogging

The robot can be manually operated in any one of the following ways:

- Axis-by-axis, i.e. one axis at a time
- Linearly, i.e. the TCP moves in a linear path (relative to one of the coordinate systems mentioned above)
- Reoriented around the TCP

It is possible to select the step size for incremental jogging. Incremental jogging can be used to position the robot exactly, since the robot moves a short distance each time the joystick is moved.

During manual operation, the current position of the robot and the external axes can be displayed on the teach pendant.

2.9 External Axes (Not available for IRB 6400C)

The robot can control up to six external axes. These axes are programmed and moved using the teach pendant in the same way as the robot's axes.

The external axes can be grouped into mechanical units to facilitate, for example, the handling of robot carriers, workpiece manipulators, etc.

The robot motion can be simultaneously coordinated with a one-axis linear robot carrier and a rotational external axis.

By specifying a kinematic model (its dimensions and gear ratio) of a unit, movements can be coordinated with the robot motion and also for a two axes manipulator.

A mechanical unit can be activated or deactivated to make it safe when, for example, manually changing a workpiece located on the unit. In order to reduce investment costs, any axes that do not have to be active at the same time can use the same drive unit.

Programs can be reused in other mechanical units of the same type.

2.10 Inputs and Outputs

A number of digital and analog inputs and outputs can be installed:

- Digital signals: up to 96 inputs/96 outputs
- Analog signals: 4 inputs/4 outputs
- Remote I/O for Allen Bradley PLC: 128 inputs/128 outputs

The inputs and outputs can be configured to suit your installation:

- Each signal and board can be given a name, e.g. gripper, feeder
- I/O mapping (i.e. a physical connection for each signal)
- Polarity (active high or low)
- Cross connections
- Up to 16 digital signals can be grouped together and used as if they were a single signal when, for example, entering a bar code

Signals can be assigned to special system functions, such as program start, so as to be able to control the robot from an external panel or PLC.

The robot can work as a PLC by monitoring and controlling I/O signals:

- Up to 3 background programs (for monitoring signals, for example) can be run in parallel with the actual robot program. These programs are started automatically at power on and run continuously until the power is turned off, i.e. even when the robot program has been stopped.
- Outputs can be set ata specific time or distance before a programmed position.
- I/O instructions can be executed concurrent to the robot motion.
- Inputs can be connected to trap routines. (When such an input is set, the trap routine starts executing. Following this, normal program execution resumes. In most cases, this will not have any visible effect on the robot motion, i.e. if a limited number of instructions are executed in the trap routine.)

Manual functions are available to:

- List all the signal values
- Create your own list of your most important signals
- Manually change the status of an output signal
- Print signal information on a printer

Signal connections consist of either connectors or screw terminals, which are located in the controller. I/O signals can also be routed to connectors on the upper arm of the robot.

2.11 Serial Communication

The robot can communicate with other devices using serial channels.

The connections to the devices can be used, for example, to:

- Display production information
- Print production statistics
- Write or read digital and analog I/O to and from PLCs or other computers
- Program reading or writing of binary or character-based information
- Control the robot from a computer, e.g. to start and stop program execution and to transfer programs
- Monitor the robot from a computer, e.g. to read the status and other data

2.12 SpotWare

SpotWare is an add-on software package that comprises dedicated spot welding functions. Thanks to customized functions for communication and monitoring (weld timers, guns and weld transformers) together with general functions for I/O management, error handling, diagnostics, status reports, etc., an efficient system for spot welding is obtained.

The program can be accessed throughout production by means of general tools that can easily adapt the robot to a specific installation. Examples of possible customizations are simple operator dialogs in plain language, monitoring of peripherals with automatic error handling, user-defined error messages in plain language, and logs of important events.

Cycle times can be shortened by means of the robot's self-optimized motion control, which results in fast acceleration and a quick approach to the spot weld. Closing the spot welding gun in advance, together with the fact that movement can commence immediately after a spot weld is completed, also contributes to making cycle times shorter.

SpotWare is a simple yet powerful program since both the positioning of the robot and the process control and monitoring are handled in one and the same instruction.

I/O signals can be easily configured to meet the requirements of a specific installation. Timing sequences and weld error actions can easily be customized. Furthermore, the system can handle double guns, different strokes, stepper counters, etc.

2.13 ArcWare

ArcWare is an add-on software adapted to the various user levels and arc welding equipments. It comprises a large number of dedicated arc welding functions, which makethe robot well suited for arc welding. ArcWare is a very powerful and flexible tool and can easily be adapted to specific processing equipment, and to different types of processes.

It is just as simple to operate and program as the basic system, which means that little training is required. The information presented to the user is adapted to the function being used at the time, which makes operation easier. ArcWare can also be customized for a particular installation.

High productivity and welding quality are supported by basic general functions, such as high acceleration and user-defined zones for reorientation. Mechanical units, such as workpiece manipulators and robot carriers, can be controlled, and coordinated with the robot motion. Up to six external axes can be handled as one mechanical unit. Two mechanical units can share the same drive system. Each mechanical unit can be activated or deactivated as a group.

In addition to the above, ArcWare includes the following functions specific to arc welding:

- Advanced process control
- A wide variety of process monitoring methods
- User-defined weld retry, including "go-to-service" routine
- Simple manipulation of weld data
- Fine adjustment of welding parameters during program execution
- Logging of process errors and events
- Weaving
- Seam tracking using weld guide

3 Technical specification

Applies to standard and Foundry versions unless otherwise stated.

3.1 Structure

Weight:	Manipulator	IRB 6400C /B-120, /B-150, /R-120, /R-150, /L-120, /L-150	1450 kg
		IRB 6400PE /2.25-75	1590 kg
		IRB 6400 /2.4-120	1870 kg
		IRB 6400 /2.4-150, /2.8-120, /3.0-75	2010 kg
		IRB 6400S /2.9-120	2240 kg
	Controller		300 kg
Volume:	Controller	1700 x 915 x 530 mm	

Airborne noise level:

The sound pressure level outside the working space	< 70 dB (A) Leq (acc. to Machinery directive 89/392 EEC)

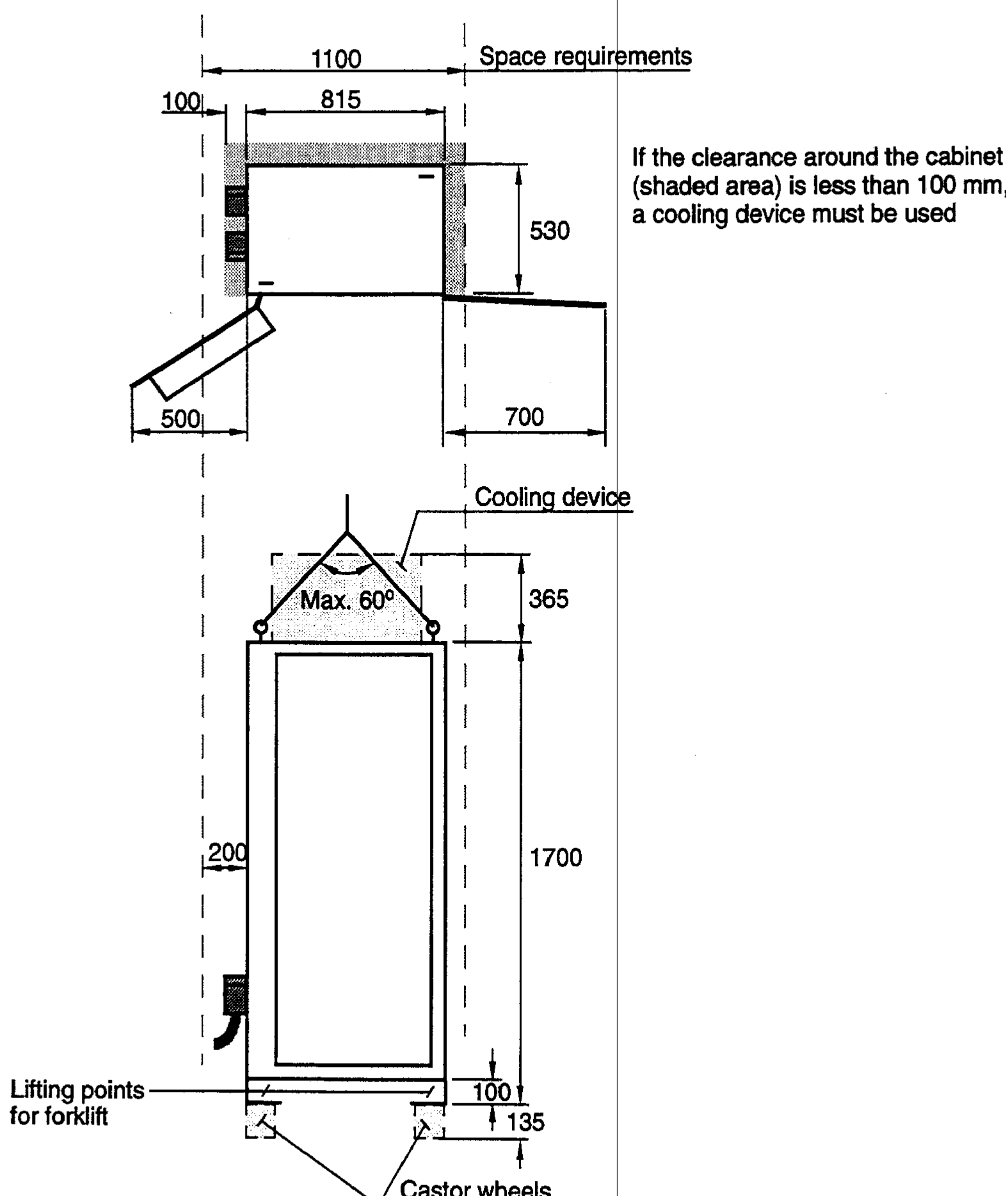

Figure 12 View of the controller from the front and from above (dimensions in mm).

IRB 6400 /2.4-120, /2.4-150, /2.8-120, /3.0-75

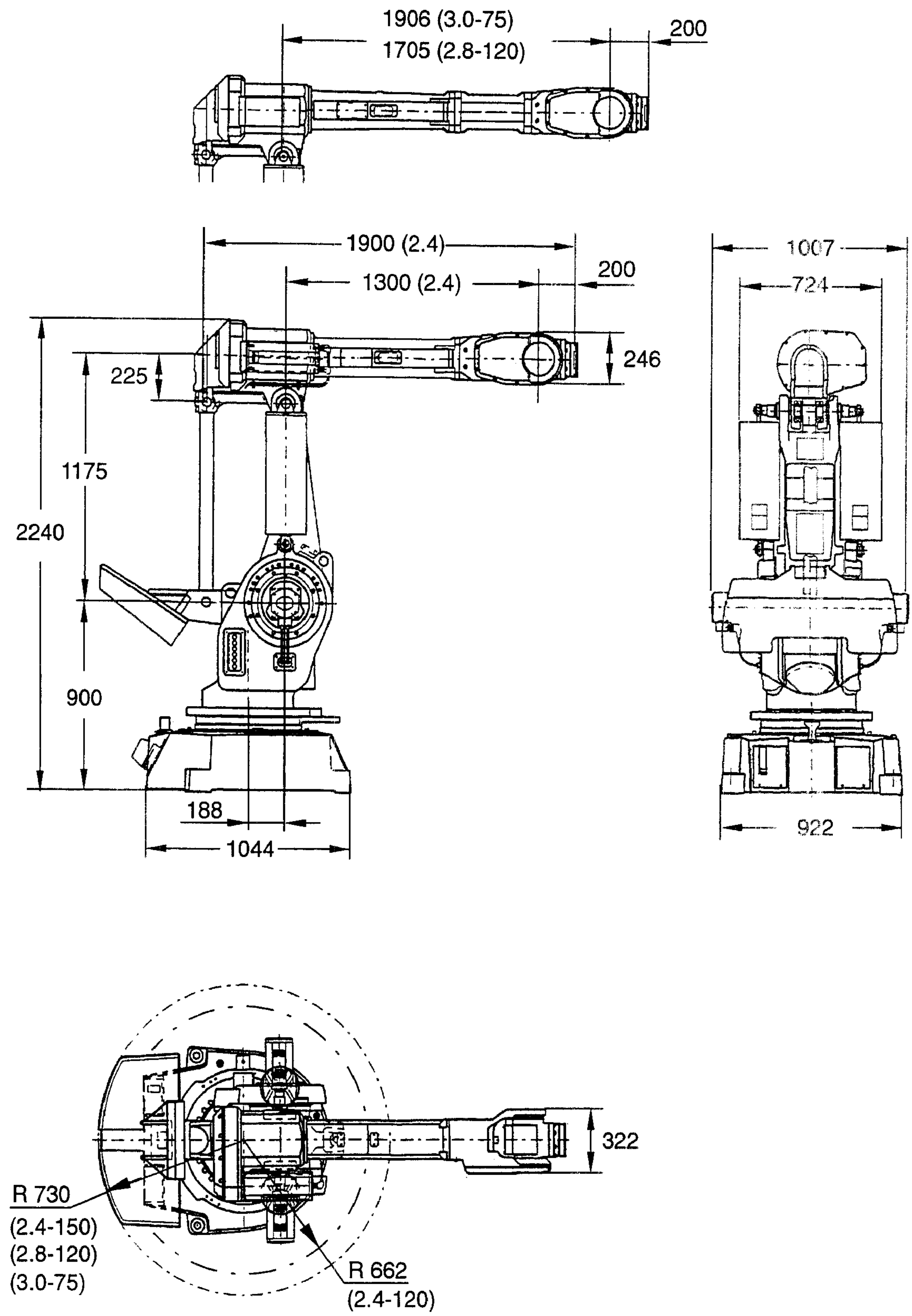

Figure 13 View of the manipulator from the side, rear and above (dimensions in mm).

IRB 6400PE /2.25-75

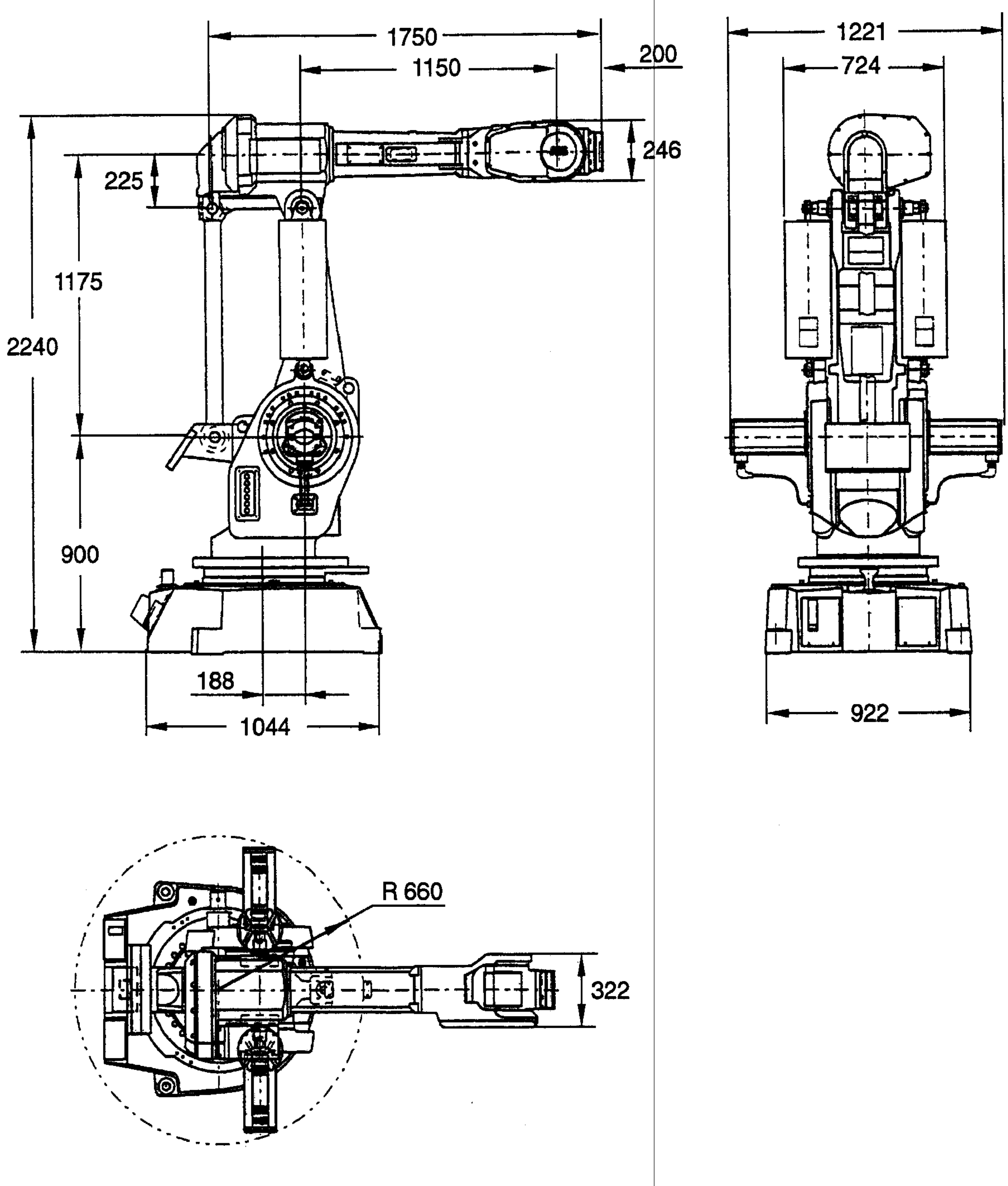

Figure 14 View of the manipulator from the side, rear and above (dimensions in mm).

IRB 6400S /2.9-120

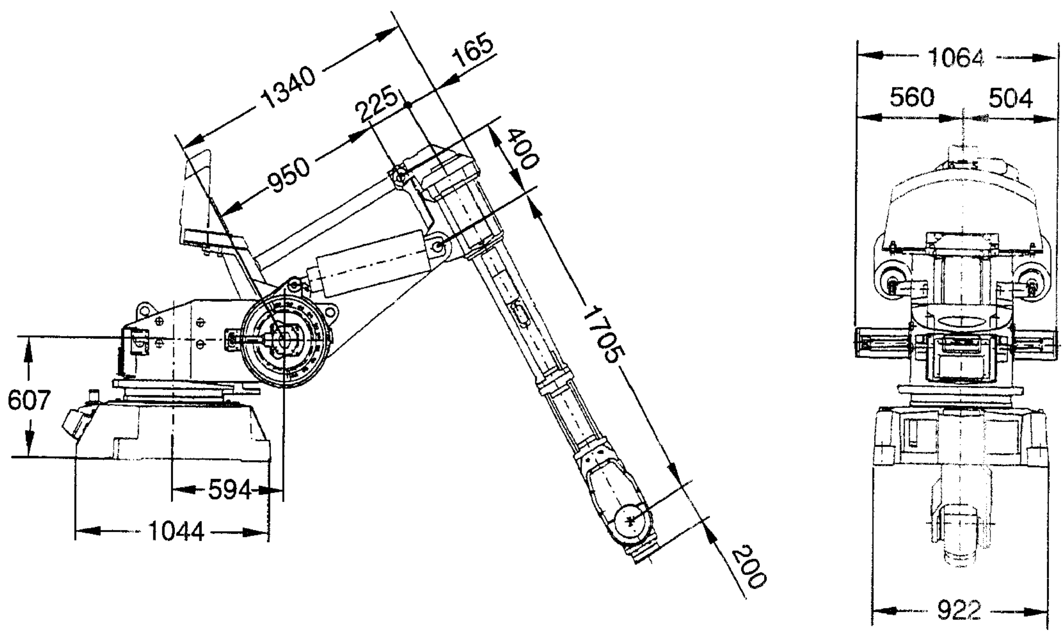

Figure 15 View of the manipulator from the side and rear (dimensions in mm).
The robot is shown in its calibration position.

IRB 6400C /B-120, /B-150, /R-120, /R-150, /L-120, /L-150

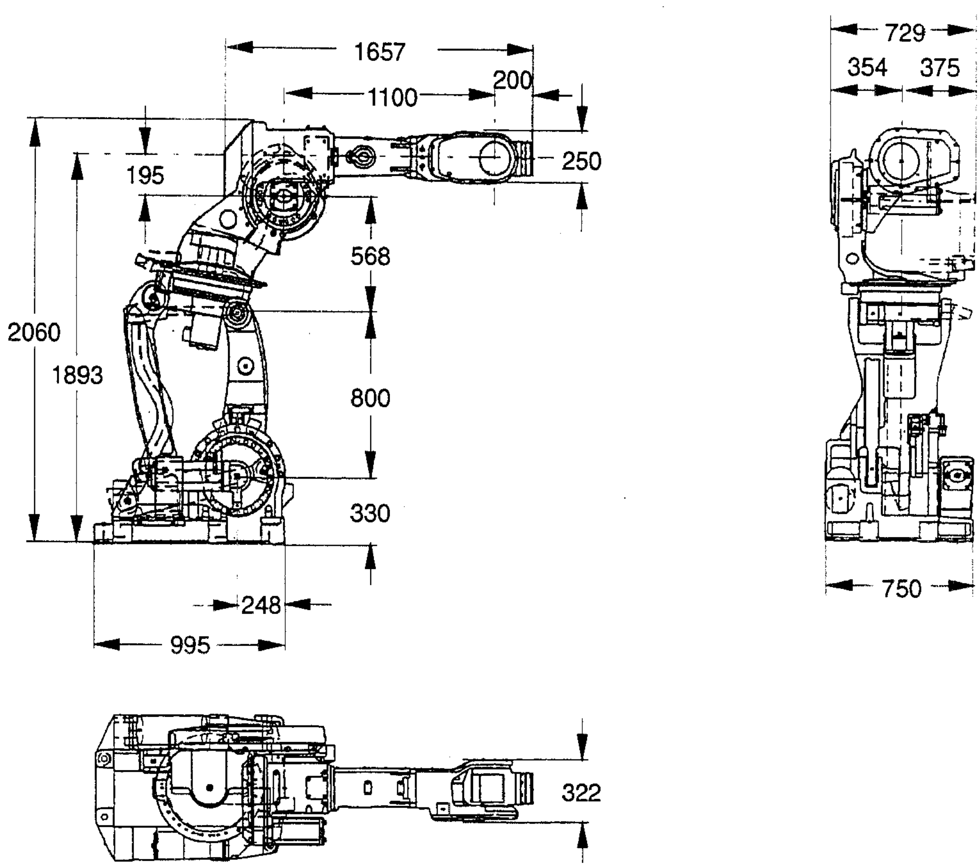

Figure 16 View of the manipulator from the side, rear and above (dimensions in mm).

3.2 Safety/Standards

The robot conforms to the following standards:

EN 292-1	Safety of machinery, terminology
EN 292-2	Safety of machinery, technical specifications
EN 60204	Electrical equipment of industrial machines
IEC 204-1	Electrical equipment of industrial machines
ISO 10218, EN 775	Manipulating industrial robots, safety
ANSI/RIA 15.06/1992	Industrial robots, safety requirements
ISO 9409-1	Manipulating industrial robots, mechanical interface
ISO 9787	Manipulating industrial robots, coordinate systems and motions
IEC 529	Degrees of protection provided by enclosures
prEN 50081-2	EMC, Generic emission
prEN 50082-2	EMC, Generic immunity

Safeguarded space stops via inputs

External safety equipment can be connected to the robot's emergency stop chain (the emergency stop chain is double) in several different ways (see Figure 17).

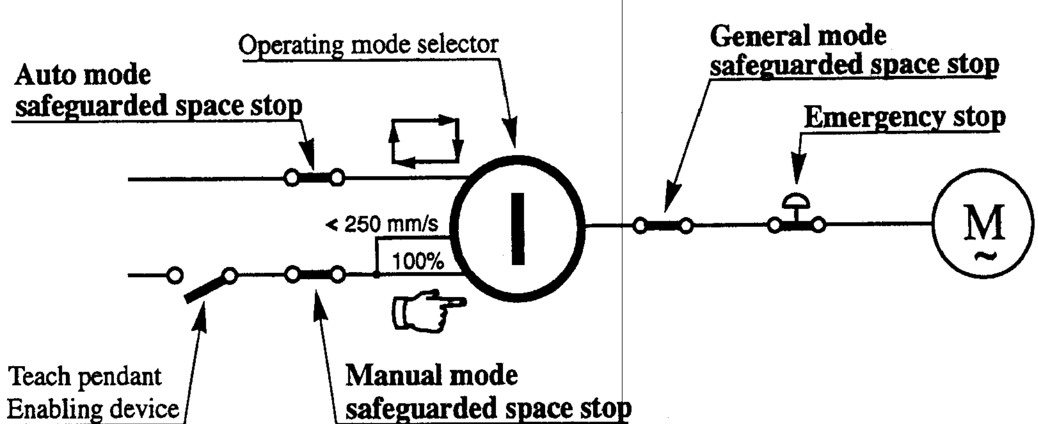

Figure 17 All safeguarded space stops force the robot's motors to the MOTORS OFF state. A delay can be connected to any safeguarded space stop.

3.3 Operation

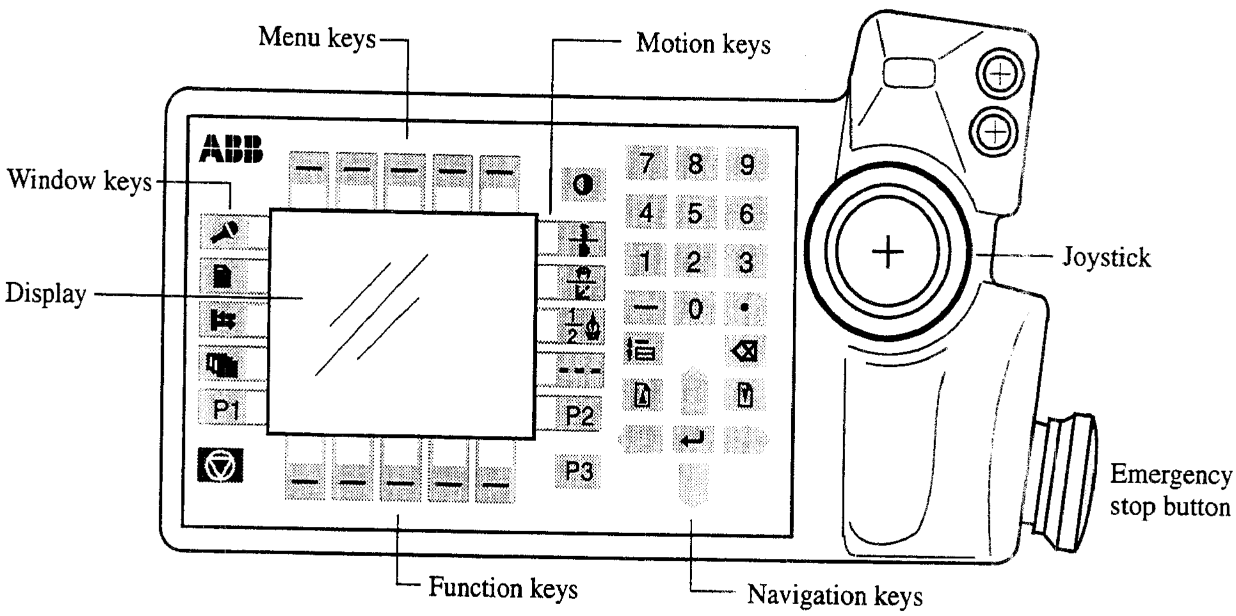

Figure 18 The teach pendant is very easy to use since any functions provided via the function and menu keys are described in plain language. The remaining keys can perform only one function each.

Display
16 text lines with 40 characters per line.

Motion keys
Select the type of movement for robot or external axis when jogging: linear movement, reorientation or axis-by-axis movement.

Navigation keys
Move the cursor and enter data.

Menu keys
Display pull-down menus.

Function keys
Select the commands used most often.

Window keys
Display one of the robot's various windows. These windows control a number of different functions:

- Jogging (manual operation)
- Programming, editing and testing a program
- Manual input/output management
- File management
- System configuration
- Service and troubleshooting
- Automatic operation

Mounting the manipulator

Maximum load in relation to the base coordinate system.

	Endurance load in operation	Max. load at emergency stop
Force xy	± 11300 N	± 18200 N
Force z	19000 ± 5500 N	19000 ± 10000 N
Torque xy	± 32000 Nm	± 39200 Nm
Torque z	± 4600 Nm	± 12500 Nm
Torque z PE/2.25-75	±12000 Nm	
IRB 6400C		
Force xy	± 10000 N	± 18500 N
Force z	16000 ± 4400 N	16000 ± 4700 N
Torque xy	± 34400 Nm	± 51000 Nm
Torque z	± 8800 Nm	± 18400 Nm

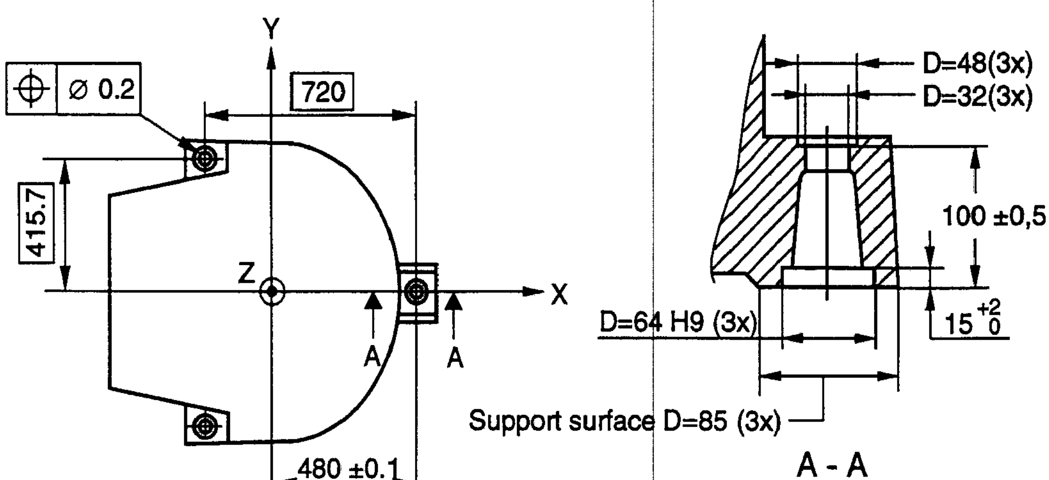

Figure 19 Hole configuration (dimensions in mm).

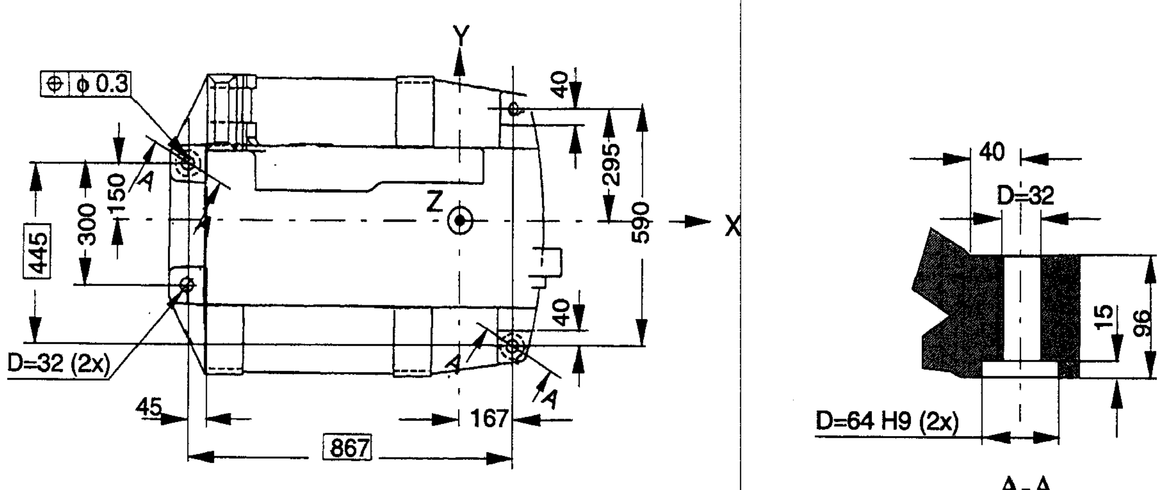

Figure 20 Hole configuration for IRB 6400C (dimensions in mm).

Load diagrams

Load diagram for IRB 6400 /2.4-120, IRB 6400 /2.8-120 and IRB 6400 /3.0-75
IRB 6400S /2.9-120, IRB 6400PE /2.25-75
IRB 6400C /B-120, /R-120, /L-120
(The curves for 100 and 120 kg are not valid for the versions /3.0-75 and PE /2.25-75, max. handling capacity limited to 75 kg).

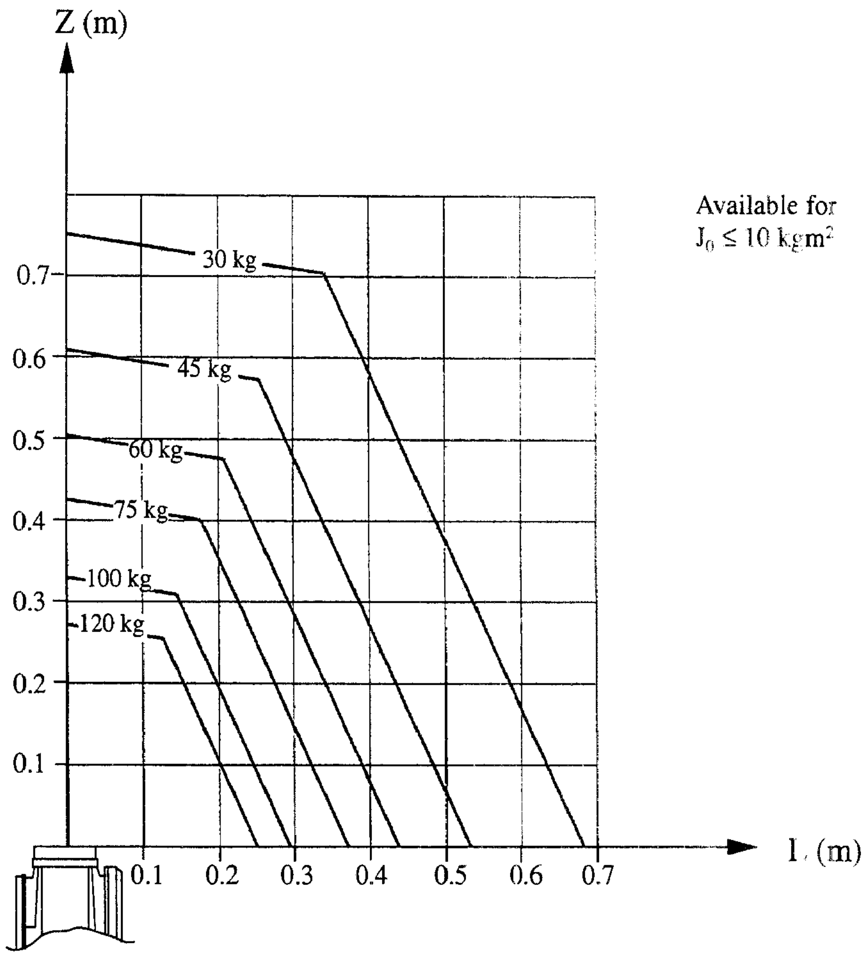

Load diagram for $15 > J_0 > 10$ kgm^2

$m \cdot Z_A^2 + 5.6 \cdot m \cdot Z_A + 288 \cdot Z_A + m + 7.44 \cdot J_0 = 464.4$

$L_B = ((9.06 - 0.24 \cdot J_0) / m)^{0.71}$

$Z_B = Z_A - 0.142 \cdot L_B$

$L_C = L_B + 0.484 \cdot Z_B$

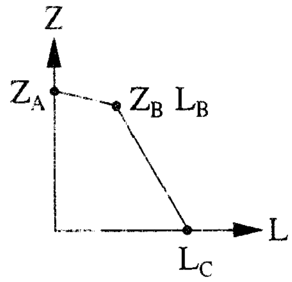

J_0 = own moment of inertia, of the total handling weight (kgm^2)
m = total handling weight (kg)
Z = see the above diagram and the coordinate system in Figure 9
L = distance in X-Y plane from Z-axis to the centre of gravity

Figure 21 Maximum weight permitted for load mounted on the mounting flange at different positions (centre of gravity).

User-defined keys (on teach pendant delivered from November -95 only)
Five user-defined keys that can be configured to set or reset an output (e.g. open/close gripper) or to activate a system input (see chapter 3.10).

3.4 Installation

Operating requirements

Protection standards IEC529

	Manipulator	IP54
	Wrist	IP55
	Controller	IP54
IRB 6400F	Manipulator	IP55
	Wrist	IP67
	Controller	IP54

Explosive environments
The robot must neither be placed nor operated in an explosive environment.

Ambient temperature

Manipulator during operation	+5°C (41°F) to +50°C (122°F)
Controller during operation	+5°C (41°F) to +40°C (104°F)
(with cooling device)	+5°C (41°F) to +52°C (125°F)
Complete robot during transportation and storage	-25°C (13°F) to +55°C (131°F)

Relative humidity

Complete robot during transportation and storage	Max. 95% at constant temperature
Complete robot during operation	Max. 95% at constant temperature

Power supply

Mains voltage	200-600V, three-phase, +10%,-15%
Mains frequency	48.5 to 61.8 Hz
Rated power	6.7 kVA (transformer size)
Rated power (IRB 6400C)	10 kVA (transformer size)
Absolute measurement backup	1000 h (rechargeble battery)

Configuration

The robot is very flexible and can, by using the teach pendant, easily be configured to suit the needs of each user:

Authorization	Password protection for configuration and program window
Most common I/O	User-defined lists of I/O signals
Instruction pick list	User-defined set of instructions
Instruction builder	User-defined instructions
Operator dialogs	Customized operator dialogs

Language	All text on the teach pendant can be displayed in several languages
Date and time	Calendar support
Power on sequence	Action taken when the power is switched on
EM stop sequence	Action taken at an emergency stop
Main start sequence	Action taken when the program is starting from the beginning
Program start sequence	Action taken at program start
Program stop sequence	Action taken at program stop
Change program sequence	Action taken when a new program is loaded
Working space	Working space limitation
External axes	Number, type, common drive unit, mechanical units
Brake delay time	Time before brakes are engaged
I/O signal	Logical names of boards and signals, I/O mapping, cross connections, polarity, scaling, default value at start up, interrupts, group I/O
Serial communication	Configuration

Load diagram for IRB 6400 /2.4-150 and
IRB 6400C /B-150, /R-150, /L-150

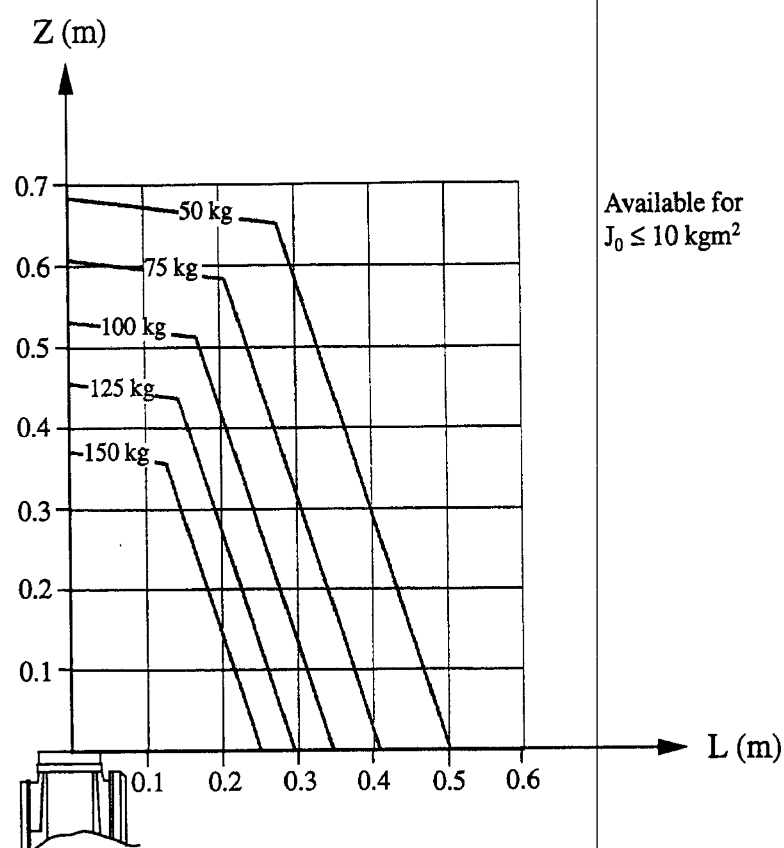

Available for
$J_0 \leq 10$ kgm^2

Load diagram for $15 > J_0 > 10$ kgm^2

$$m \bullet Z_A^2 - 0.89 \bullet m \bullet Z_A + 250 \bullet Z_A + m + 0.62 \bullet J_0 = 220$$

$$L_B = ((11.5 - 0.32 \bullet J_0) / m)^{0.71}$$

$$Z_B = Z_A - 0.118 \bullet L_B$$

$$L_C = L_B + 0.346 \bullet Z_B$$

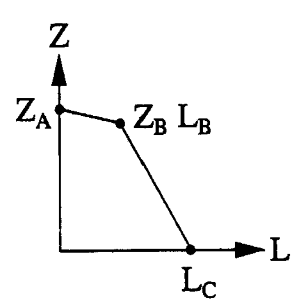

J_0 = own moment of inertia, of the total handling weight (kgm^2)
m = total handling weight (kg)
Z = see the above diagram and the coordinate system in Figure 9
L = distance in X-Y plane from Z-axis to the centre of gravity

Figure 22 Maximum weight permitted for load mounted on the mounting flange at different positions (centre of gravity).

Handling capacity for IRB 6400 /2.8-120 in presstending application

Note Option 051, PT adaption for IRB 6400/2.8-120 must be installed.

The weight and dimension of the part and gripper are limited by the maximum static torque and moment of inertia.

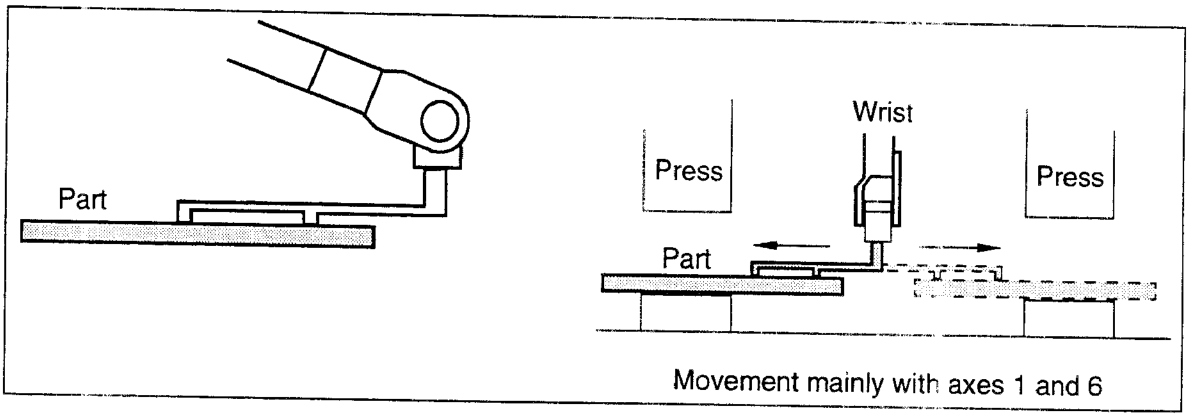

Figure 23 A-movement (inward movement).

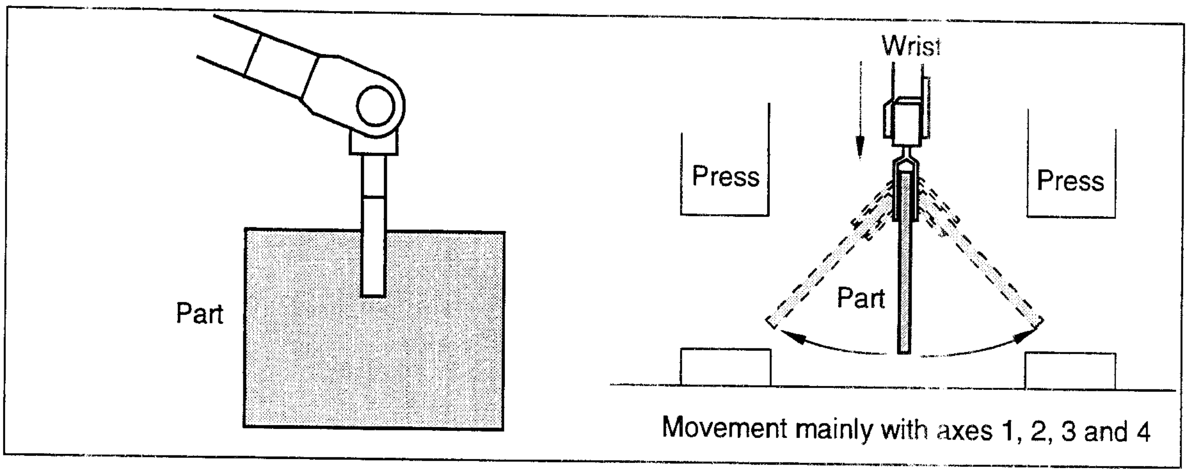

Figure 24 B-movement.

Static torque:	A-movement	Axis 5 $Ma_5 < 650$ Nm
	B-movement	Axis 4 $Mb_4 < 650$ Nm
Moment of inertia:	A-movement	Axis 5, $Ja_5 < 105$ kgm^2
		Axis 6, $Ja_6 < 120$ kgm^2
	B-movement	Axis 4, $Jb_4 < 105$ kgm^2
		Axis 5, $Jb_5 < 120$ kgm^2

An approximation of M and J can be calculated according to the following formula:

$Ma_5 = 9.81 \bullet (m_g \bullet r + m_p \bullet s)$ (Nm)

$Mb_4 = 9.81 \bullet (m_g \bullet (r + 0.2) + m_p \bullet (s + 0.2))$ (Nm)

$Ja_5 = m_g / 12 \bullet c^2 + m_g \bullet r^2 + m_p / 12 \bullet a^2 + m_p \bullet s^2$ (kgm^2)

$Ja_6 = m_g / 12 \bullet c^2 + m_g \bullet r^2 + m_p / 12 \bullet (a^2 + b^2) + m_p \bullet s^2$ (kgm^2)

$Jb_4 = m_g / 12 \bullet c^2 + m_g \bullet (r + 0.2)^2 + m_p / 12 \bullet a^2 + m_p \bullet (s + 0.2)^2$ (kgm^2)

$Jb_5 = m_g / 12 \bullet c^2 + m_g \bullet (r + 0.2)^2 + m_p / 12 \bullet (a^2 + b^2) + m_p \bullet (s + 0.2)^2$ (kgm^2)

m_g = weight of gripper (kg) m_p = weight of part (kg)
Distance a, b, c, r and s (m) are shown in Figure 25.

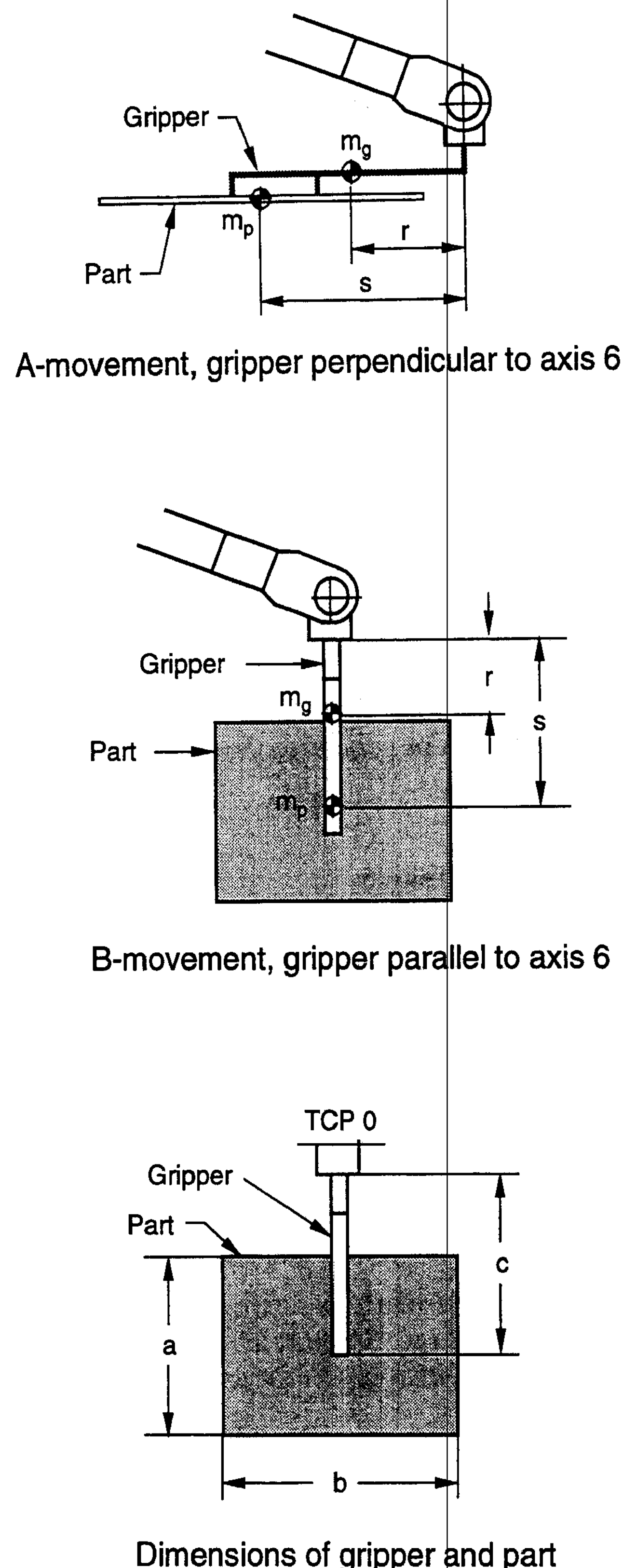

Figure 25 Distance a, b, r and s (m).

Process forces for IRB 6400PE /2.25-75

Max. force through the wrist centre:

- 0-65° relative to the vertical line, F = 5000 N
- 65-90° relative to the vertical line, F = 4500 N
- 90-115° relative to the vertical line, F = 3500 N

Max. offset force from the wrist centre:

- 3500 N when r = 100 mm.

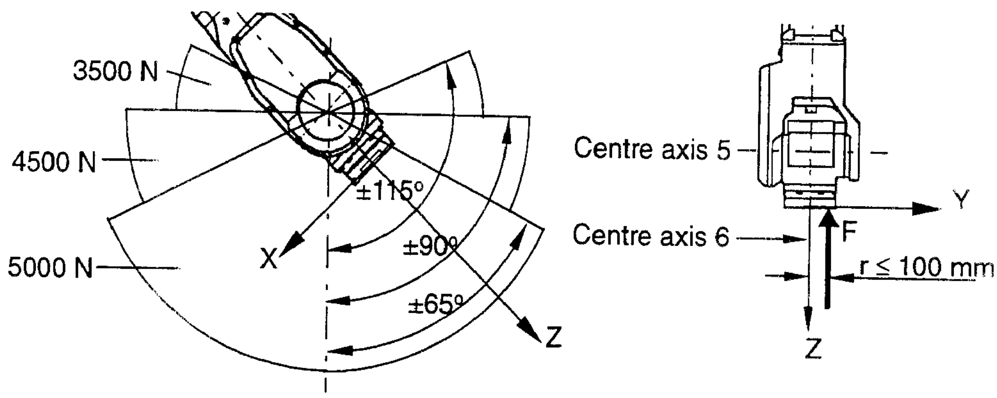

Figure 26 Max. force through the wrist centre.

The direction of force F must be parallel to the z-axis in the tool coordinate system (see Figure 11).

Time at max. force:

- < 1 second exclusive rewelds
- < 3 seconds for rewelds

Due to the dynamic forces and the backward elastic deflection in the robot, the rise time for rebuilding the forces in the air cylinder must comply with the values below:

- Min. time to achieve 90% of max force:	F > 3500 N	> 0.15 sec.
	F ≤ 3500 N	> 0.03 sec.
- Min. time to go from 100% load to 0% load:	F > 3500 N	> 0.1 sec.
	F ≤ 3500 N	> 0.03 sec.

The angular fault from z-axis must be less than 5°.
The distance between the weld cylinder and weld plate: 15 mm.

The number of poke points permitted per minute:
The force contact surface = 1 sec. (Cabinet temperature 45° C).
The number of points can be increased if the cabinet temperature can be decreased.

Axis	% Torque[1]	Number of points/minute[2]
1	100	3-5
	75	6-8
	50	15-20
2 and 3	100	12-25
	75	26-40

[1] 100% = maximum torque load on current axis
[2] The lower value applies when the current robot axis carries out large movements. The higher value applies to small movements of the current axis.

Mounting equipment

Extra loads can be mounted on the upper arm and the frame. Definitions of distances and masses are shown in Figure 27 and Figure 28 (upper arm) and in Figure 29 and Figure 30 (frame).
The robot is supplied with holes for mounting extra equipment (see Figure 31 and Figure 32).

Upper arm

IRB 6400 /2.4-120, /2.4-150, /2.8-120, IRB 6400PE /2.25-75, IRB 6400S /2.9-120

Permitted extra load on upper arm plus the maximum handling weight (See Figure 27):
M1 ≤ 35 kg with distance a ≤ 500 mm, centre of gravity in axis 3 extension
or
M2 ≤ 35 kg with distance b ≤ 400 mm
or
M3 ≤ 10 kg with distance c ≥300 mm
If the handling weight is lower than the maximum weight, M1 alt. M2 can be increased as follows:
M1 (alt. M2) + handling weight ≤ 35 kg + max. handling weight

For example, if the handling weight for 2.4-120 is only 80 kg, M2 can equal 75 kg.

IRB 6400 /3.0-75

Permitted extra load on upper arm (See Figure 27):
M1 ≤ 35 kg with distance a ≤ 500 mm, centre of gravity in axis 3 extension
or
M2 ≤ 20 kg with distance b ≤ 400 mm
or
M3 ≤ 5 kg with distance c ≥300 mm

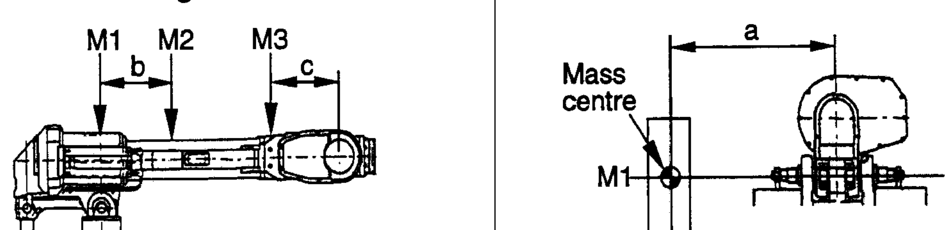

Figure 27 Permitted extra load on upper arm

IRB 6400 C /B-120, /B-150, /R-120, /R-150, /L-120, /L-150

Permitted extra load on upper arm plus the maximum handling weight (See Figure 28):
M2 ≤ 50 kg with distance b ≤ 400 mm
or
M3 ≤ 30 kg with distance c ≥300 mm
If the handling weight is lower than the maximum weight, M2 can be increased as follows:
M2 + handling weight ≤ 50 kg + max. handling weight

For example, if the handling weight for type -120 is only 80 kg, M2 can equal 90 kg.

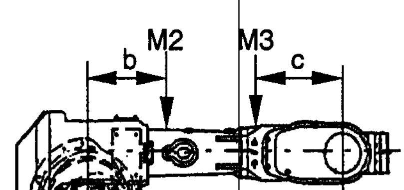

Figure 28 Permitted extra load on upper arm IRB 6400C

Frame (Hip Load)

Permitted extra load on frame is $J_H = 120$ kgm^2.
Recommended position (see Figure 29 and Figure 30).
$J_H = J_{H0} + M4 \bullet R^2$

where	J_{H0}	is the moment of inertia of the equipment
	R	is the radius (m) from the centre of axis 1
	M4	is the total mass (kg) of the equipment including bracket and harness (≤ 320 kg)

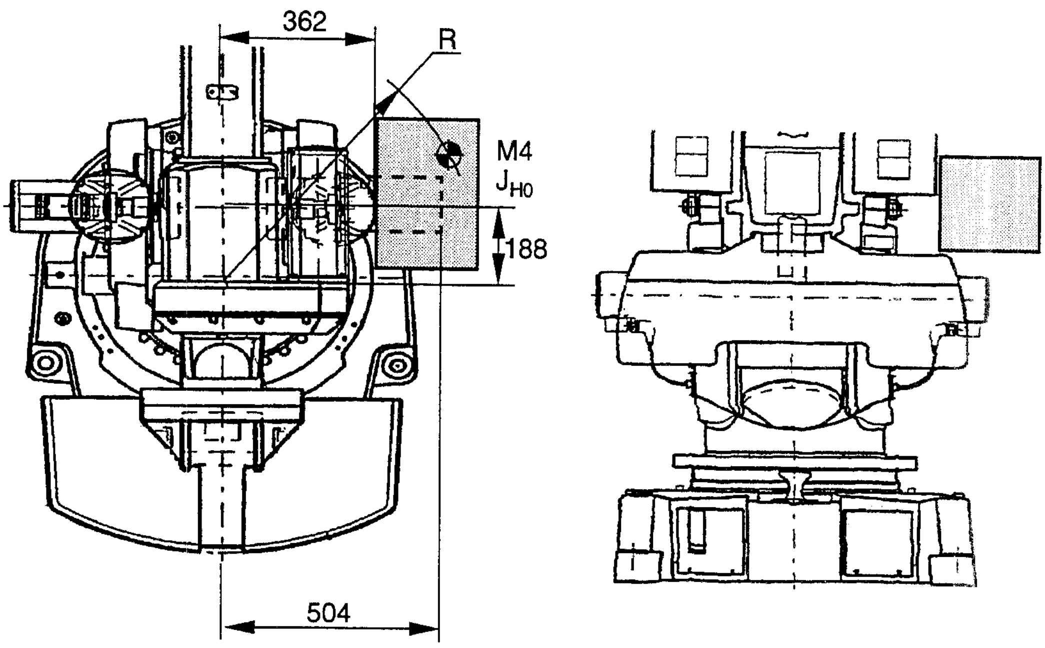

Figure 29 Extra load on frame of IRB 6400 /2.4-120, /2.4-150, /2.8-120, /3.0-75 and IRB 6400PE /2.25-75. (dimensions in mm).

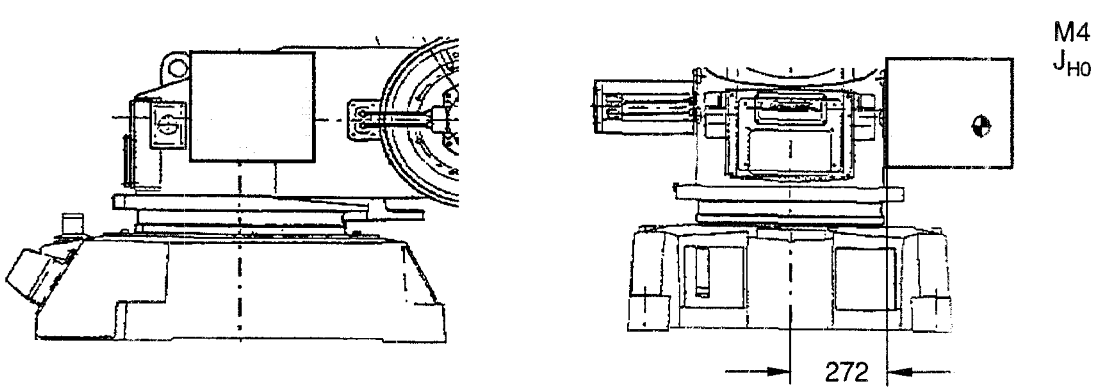

Figure 30 Extra load on frame of IRB 6400S /2.9-120. (dimensions in mm).

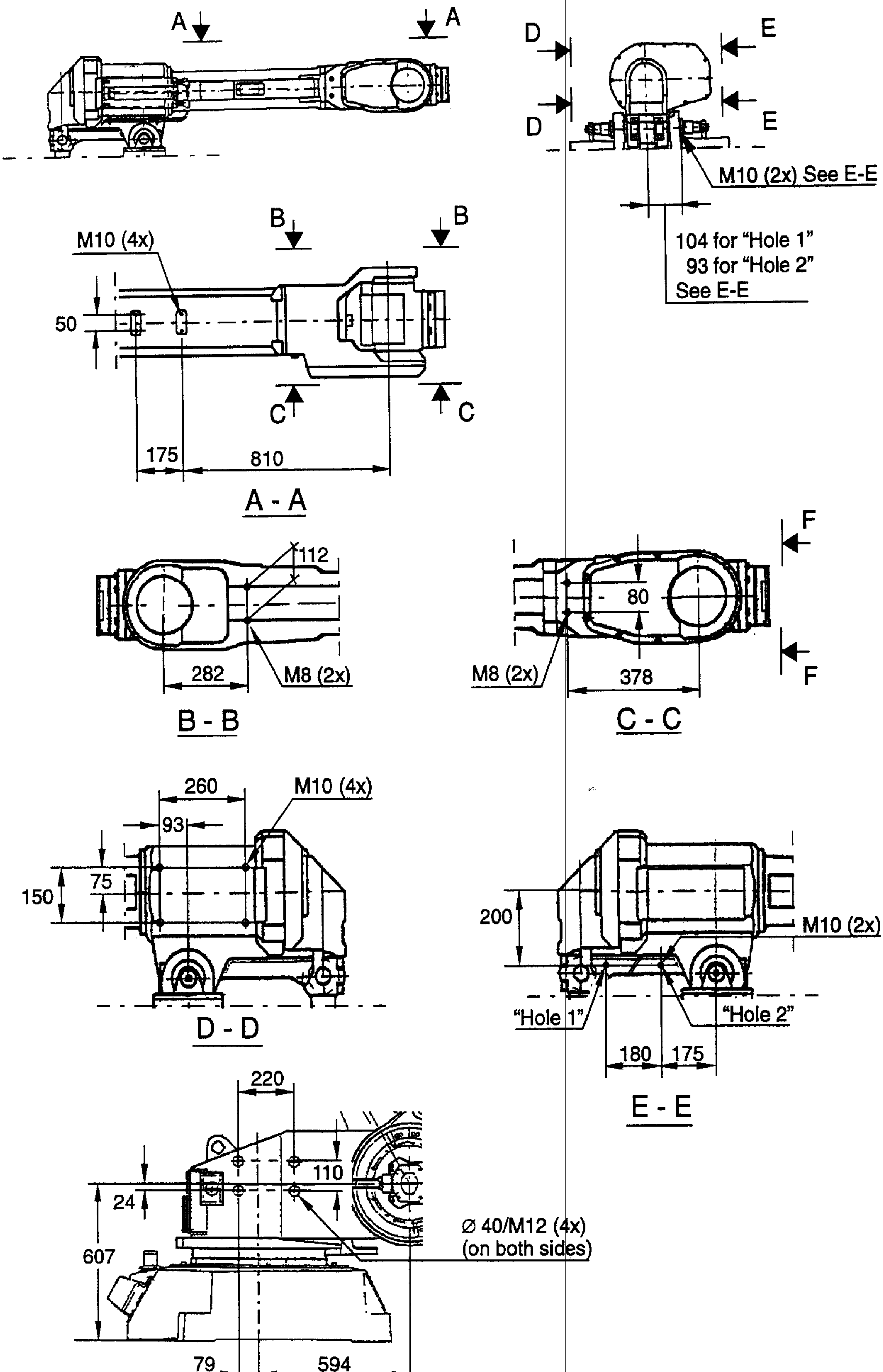

Figure 31 Holes for mounting of extra equipment (dimensions in mm).

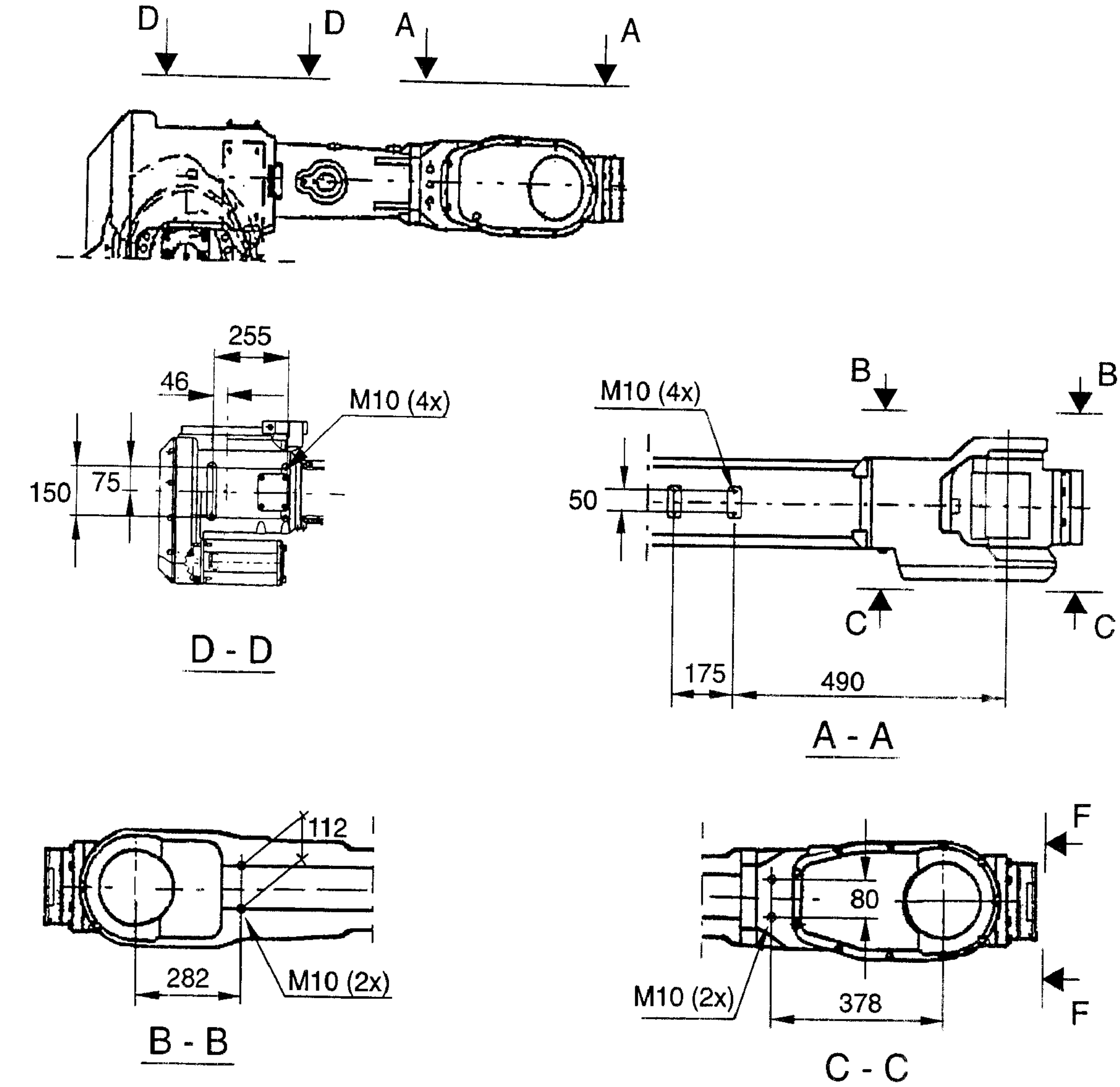

Figure 32 Holes for mounting of extra equipment IRB 6400C (dimensions in mm).

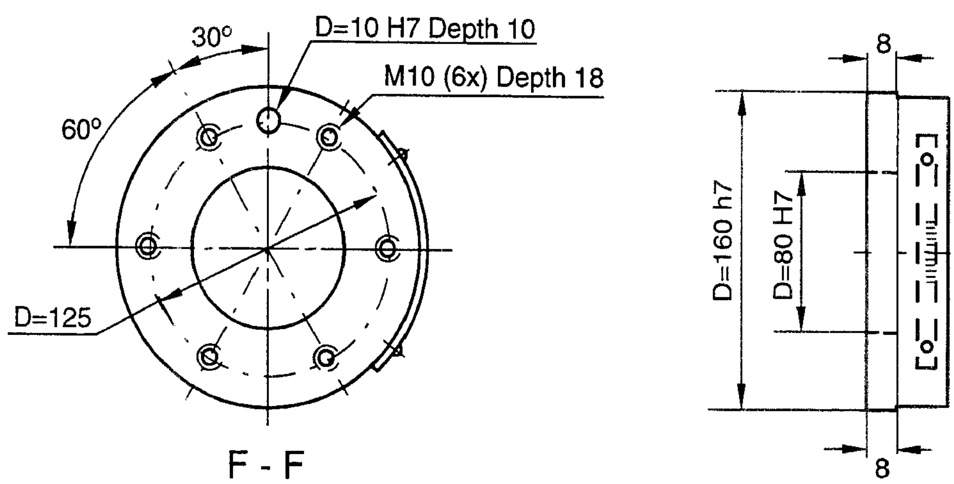

Figure 33 The mechanical interface (mounting flange) ISO 9409. (Dimensions in mm).

3.5 Programming

The programming language – RAPID – is a high-level application-oriented programming language and includes functionality, such as

- functions and procedures
- routine parameters
- multitasking, i.e. parallel programs
- arithmetic and logical expressions
- arrays of up to three dimensions
- modular programs
- global and local data and routines.

The following sets of instructions/functions are available. A subset of instructions to suit the needs of a particular installation, or the experience of the programmer, can be installed in pick lists. Program routines can easily be made, acting like new instructions.

Miscellaneous

:=	Assigns a value
WaitTime	Waits a given amount of time
WaitUntil	Waits until a condition is met
comment	Inserts comments into the program
OpMode	Reads the current operating mode
RunMode	Reads the current program execution mode
Dim	Gets the size of an array
Present	Tests if an optional parameter is used

To control the program flow

ProcCall	Calls a new procedure
RETURN	Finishes execution of a routine
FOR	Repeats a given number of times
GOTO	Goes to (jumps to) a new instruction
Compact IF	If a condition is met, then execute one instruction
IF	If a condition is met, then execute a sequence of instructions
label	Line name (used together with GOTO)
TEST	Depending on the value of an expression ...
WHILE	Repeats as long as ...
Stop	Stops execution
EXIT	Stops execution when a restart is not allowed
Break	Stops execution temporarily

Motion settings

AccSet	Reduces the acceleration
ConfJ	Controls the robot configuration during joint movement
ConfL	Monitors the robot configuration during linear movement
LimConfL	Defines the permitted deviation in the robot configuration
VelSet	Changes the programmed velocity
GripLoad	Defines the payload
SingArea	Defines the interpolation method through singular points

PDispOn	Activates program displacement
PDispSet	Activates program displacement by specifying a value
DefFrame	Defines a program displacement automatically
EOffsOn	Activates an offset for an external axis
EOffsSet	Activates an offset for an external axis using a value
ORobT	Removes a program displacement from a position
SoftAct	Activates soft servo for a robot axis (Not for IRB 6400C)

Motion

MoveC	Moves the TCP circularly
MoveJ	Moves the robot axis by joint movement
MoveL	Moves the TCP linearly
SearchC	Searches during circular movement
SearchL	Searches during linear movement
ActUnit	Activates an external mechanical unit
DeactUnit	Deactivates an external mechanical unit
Offs	Displaces a position
RelTool	Displaces a position expressed in the tool coordinate system
MirPos	Mirrors a position
CRobT	Reads current robot position (the complete *robtarget*)
StopMove	Stops robot motion
StartMove	Restarts robot motion

Input and output signals

InvertDO	Inverts the value of a digital output signal
PulseDO	Generates a pulse on a digital output signal
Reset	Sets a digital output signal to 0
Set	Sets a digital output signal to 1
SetAO	Sets the value of an analog output signal
SetDO	Sets the value of a digital output signal after a defined time
SetGO	Sets the value of a group of digital output signals
WaitDI	Waits until a digital input is set
AInput	Reads the value of an analog input signal
DInput	Reads the value of a digital input signal
DOutput	Reads the value of a digital output signal
GInput	Reads the value of a group of digital input signals
GOutput	Reads the value of a group of digital output signals
TestDI	Tests if a digital input signal is set

Interrupts

ISignalDI	Orders interrupts from a digital input
ITimer	Orders a timed interrupt
IDelete	Cancels an interrupt
ISleep	Deactivates an interrupt
IWatch	Activates an interrupt
IDisable	Disables interrupts
IEnable	Enables interrupts
CONNECT	Connects an interrupt to a trap routine

Error Recovery

EXIT	Terminates program execution
RAISE	Calls an error handler
RETRY	Restarts following an error
RETURN	Returns to the routine that called the current routine

Communication	
TPErase	Erases text printed on the teach pendant
TPWrite	Writes on the teach pendant
TPReadFK	Reads function keys
TPReadNum	Reads a number from the teach pendant
ErrWrite	Stores an error message in the error log
System & Time	
ClkReset	Resets a clock used for timing
ClkStart	Starts a clock used for timing
ClkStop	Stops a clock used for timing
ClkRead	Reads a clock used for timing
CDate	Reads the current date as a string
CTime	Reads the current time as a string
GetTime	Gets the current time as a numeric value
Mathematics	
Add	Adds a numeric value
Clear	Clears the value
Decr	Decrements by 1
Incr	Increments by 1
Abs	Calculates the absolute value
Sqrt	Calculates the square root
Exp	Calculates the exponential value with the base "e"
Pow	Calculates the exponential value with an arbitrary base
ACos	Calculates the arc cosine value
ASin	Calculates the arc sine value
ATan	Calculates the arc tangent value in the range
Cos	Calculates the cosine value
Sin	Calculates the sine value
Tan	Calculates the tangent value
EulerZYX	Calculates Euler angles from an orientation
OrientZYX	Calculates the orientation from Euler angles
PoseInv	Inverts a pose
PoseMult	Multiplies a pose
PoseVect	Multiplies a pose and a vector
ArcWare (option 556 or 557)	
ArcL	Arc welding with linear movement
ArcC	Arc welding with circular movement
SpotWare (option 558 or 559)	
SpotL	Spot welding with linear movement
Advanced functions (option 585)	
StorePath	Stores the path when an interrupt or error occurs
RestoPath	Restores the path after an interrupt/error
TriggC	Position fix output/interrupt during circular movement
TriggL	Position fix output/interrupt during linear movement
TriggJ	Position fix output/interrupt during joint movement
Open	Opens a file or serial channel
Close	Closes a file or serial channel
Write	Writes to a character-based file or serial channel
WriteBin	Writes to a binary serial channel
ReadNum	Reads a number from a file or serial channel
ReadStr	Reads a string from a file or serial channel
ReadBin	Reads from a binary serial channel

RAP Serial Link (option 593)

SCWrite	Sends a message to the computer (using RAP)

Memory

User memory for Rapid instructions:

Basic	1.0 Mbyte	approx. 1500-3000	Depending
Extended 2 Mb	3.0 Mbyte	approx. 4500-9000	on
Extended 4 Mb	4.0 Mbyte	approx. 6000-12000	type of
Extended 12 Mb	4.0 Mbyte	approx. 6000-12000	instruction

Mass storage[1)]:

RAM memory	400 kbyte		5 sec./Mbyte
Diskette	1.44 Mbyte	approx. 15000	2 min./Mbyte

[1)] Requires approx. 3 times less space than in the program memory

Type of diskette: 3.5" 1.44 Mb (HD) MS DOS format.
Programs and all user-defined data are stored in ASCII format.

Memory backup

The RAM memory is backed up by two Lithium batteries. Each battery has a capacity of 2-5 months power off time (depending of memory board size).
A warning is given when the first battery is empty.

3.6 Automatic Operation

The following production window commands are available:

- Load/select the program
- Start the program
- Execute instruction-by-instruction (forward/backward)
- Reduce the velocity temporarily
- Display program-controlled comments (which tell the operator what is happening)

3.7 Maintenance and Troubleshooting

The robot requires only a minimum of maintenance. Certain routines check and actions should be carried out at regular intervals, the shortest interval once a year.
For detailed information on maintenance procedures, see Maintenance section in the Product Manual.

3.8 Robot Motion

IRB 6400 /2.4-120 /2.4-150 /2.8-120 /3.0-75 and PE/2.25-75

Type of motion		**Range of movement**	
Axis 1	Rotation motion	+180° to -180°	
Axis 2	Arm motion	+70° to -70°	
Axis 3	Arm motion	+105° to -28°	
Axis 4	Wrist motion	+300° to -300°	+200° to -200° (PE /2.25-75)
Axis 5	Bend motion	+120° to -120°	
Axis 6	Turn motion	+300° to -300°	

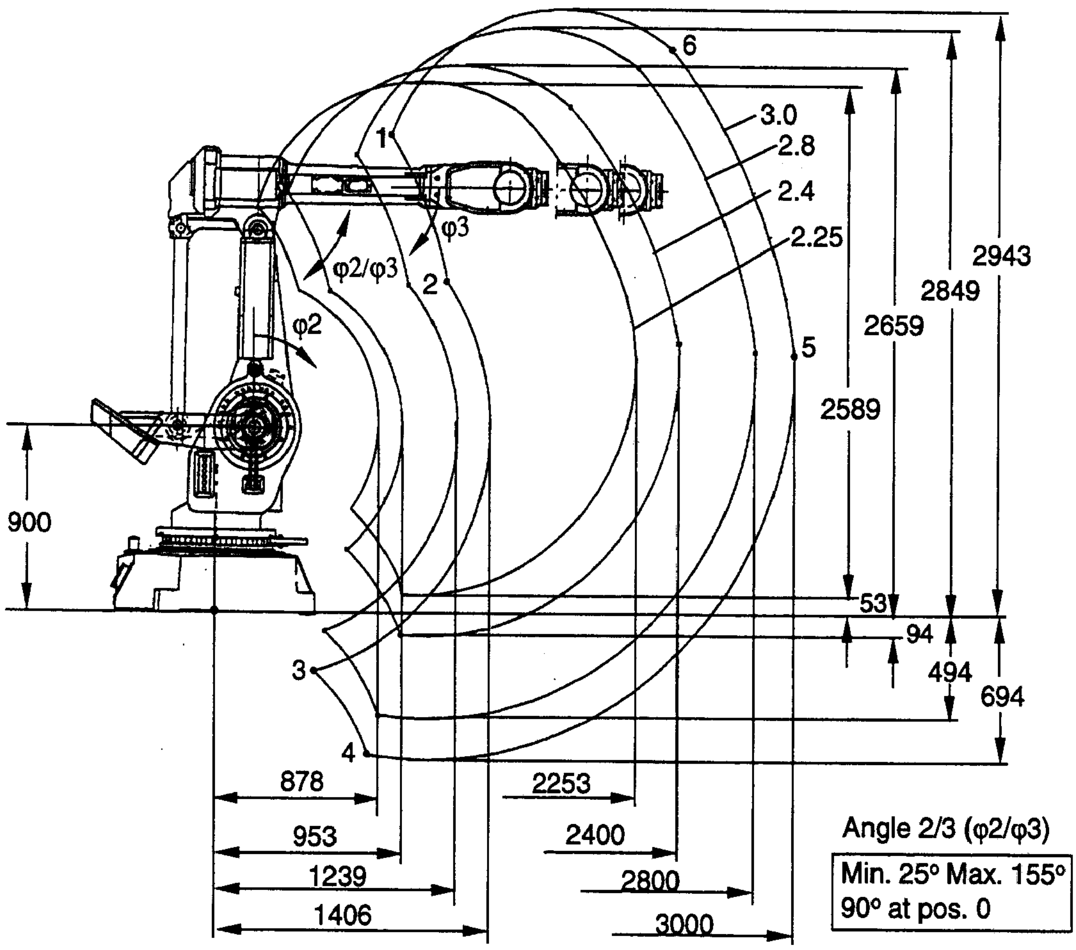

All dimensions refer to the wrist centre (mm)

Positions at wrist centre (mm)

pos.	2.4-120 2.4-150		2.8-120		3.0-75		PE/2.25-75	
	x	z	x	z	x	z	x	z
0	1488	2075	1892	2075	2094	2075	1338	2075
1	388	2034	695	2224	873	2318	205	1963
2	571	1563	974	1598	1175	1615	421	1549
3	680	314	575	-77	523	-271	718	459
4	962	-89	857	-479	805	-674	1000	56
5	2395	1336	2798	1300	2999	1283	2246	1349
6	1802	2467	2159	2657	2337	2752	1669	2397

Angle φ2, φ3 (degrees)

pos.	axis 2 (φ2)	axis 3 (φ3)
0	0	0
1	-70	-28
2	-70	-5
3	40	105
4	70	105
5	70	5
6	37	-28

Figure 34 The extreme positions of the robot arm.

IRB 6400S /2.9-120

Type of motion		Range of movement
Axis 1	Rotation motion	+180° to -180°
Axis 2	Arm motion	+140° to +10°
Axis 3	Arm motion	+155° to +47°
Axis 4	Wrist motion	+300° to -300°
Axis 5	Bend motion	+120° to -120°
Axis 6	Turn motion	+300° to -300°

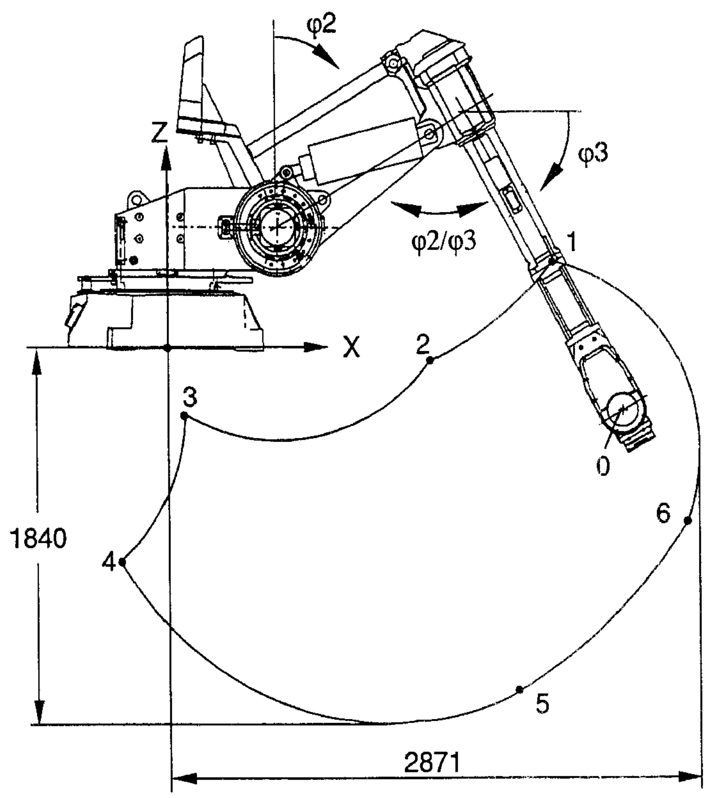

All dimensions refer to the wrist centre (mm)

Angle 2/3 (φ2/φ3)

Min. 25° Max. 155°
90° at pos. 0

Positions at wrist centre (mm)

pos.	x	z
0	2464	-282
1	2086	449
2	1418	-46
3	94	-317
4	-245	-1045
5	1863	-1709
6	2768	-917

Angle φ2, φ3 (degrees)

pos.	axis 2 (φ2)	axis 3(φ3)
0	60	60
1	10	47
2	10	75
3	90	155
4	140	155
5	140	75
6	117	47

Figure 35 The extreme positions of the robot arm.

IRB 6400C/ B-120, /B-150

Type of motion		**Range of movement**
Axis 1	Arm motion	+70° to -65°
Axis 2	Rotation motion	+90° to -90°
Axis 3	Arm motion	+90° to -180°
Axis 4	Wrist motion	+300° to -300°
Axis 5	Bend motion	+120° to -120°
Axis 6	Turn motion	+300° to -300°

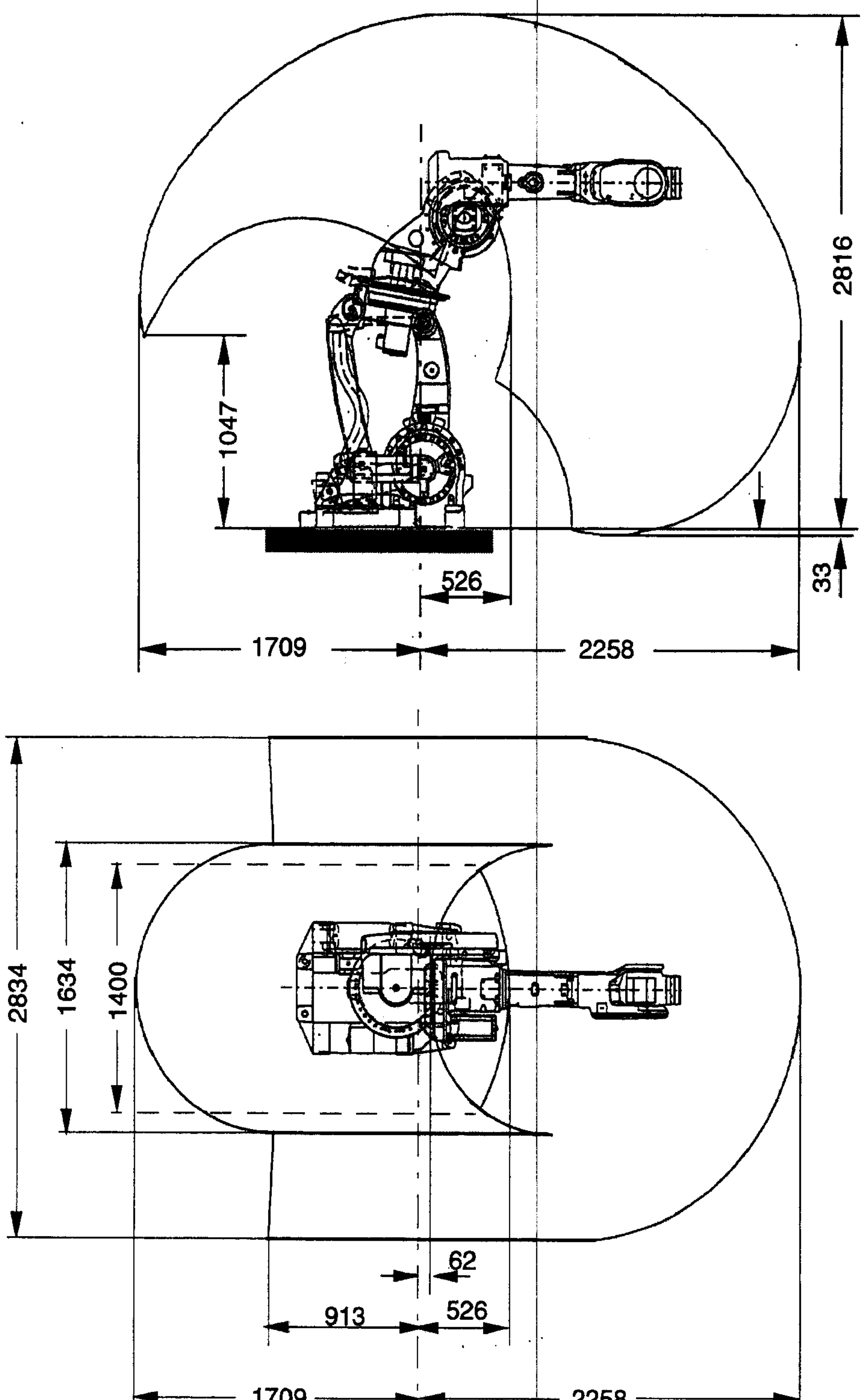

Figure 36 The extreme position of the robot arm IRB 6400C Bend-Back (dimensions in mm).

IRB 6400C /R-120, /R-150, /L-120 and /L-150

Type of motion		Range of movement Right Side	Left Side
Axis 1	Arm motion	+70° to -65°	+70° to -65°
Axis 2	Rotation motion	+90° to -200°	+200° to -90°
Axis 3	Arm motion	+90° to -60°	+90° to -60°
Axis 4	Wrist motion	+300° to -300°	+300° to -300°
Axis 5	Bend motion	+120° to -120°	+120° to -120°
Axis 6	Turn motion	+300° to -300°	+300° to -300°

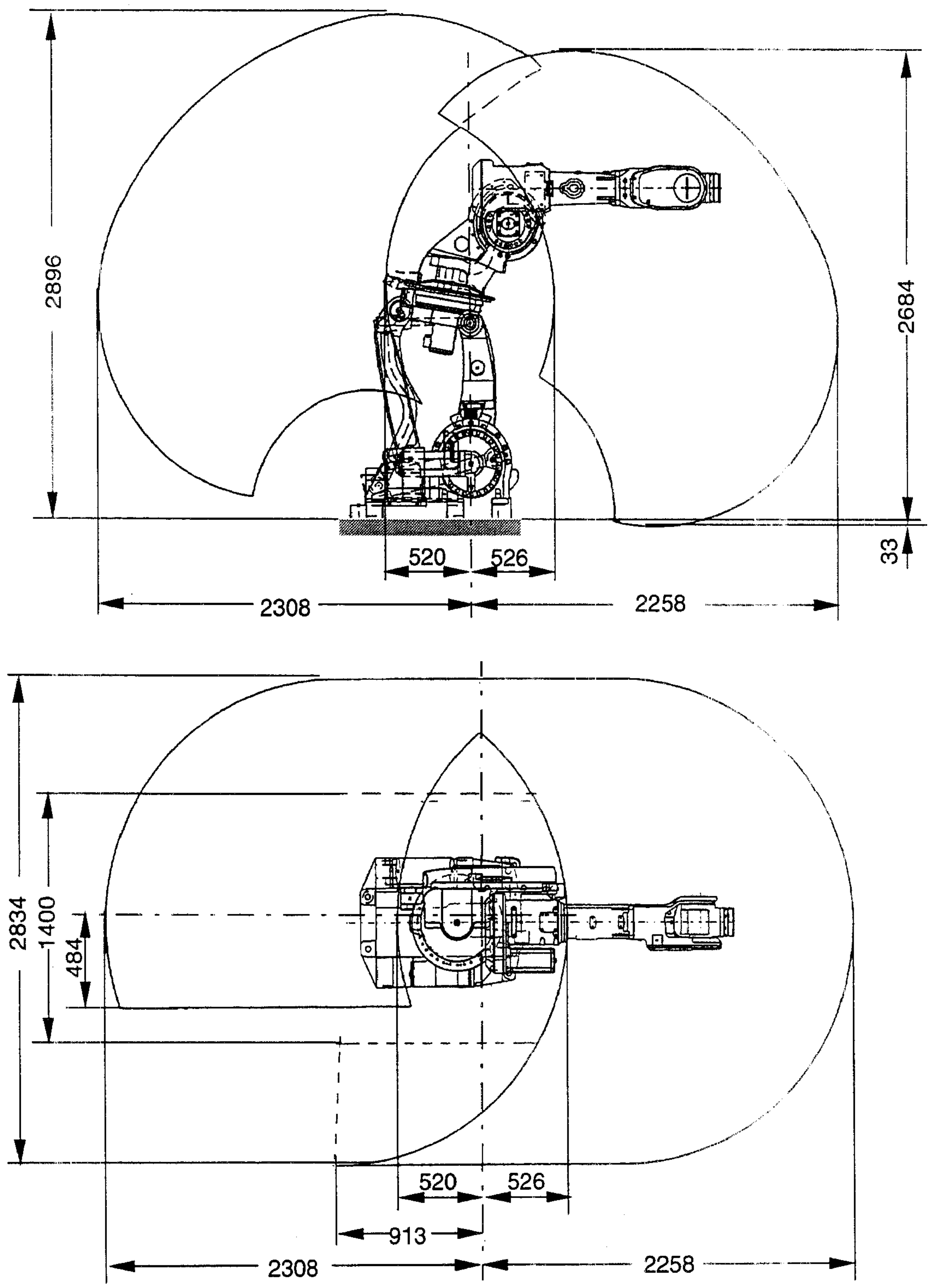

Figure 37 The extreme position of the robot arm IRB 6400C Turn-Back (Left Side). (Dimensions in mm)

Performance according to ISO 9283

Velocity IRB 6400 versions:

Axis no.	2.4-120 C/ B-120 C/ R-120 C/ L-120	2.4-150 C/ B-150 C/ R-150 C/ L-150	2.8-120	3.0-75	S/2.9-120	PE/2.25-75
1	100°/s	90°/s	100°/s	100°/s	100°/s	70°/s
2	100°/s	90°/s	100°/s	100°/s	100°/s	70°/s
3	100°/s	90°/s	100°/s	100°/s	100°/s	70°/s
4	210°/s	120°/s	210°/s	210°/s	210°/s	210°/s
5	150°/s	120°/s	150°/s	150°/s	150°/s	150°/s
6	210°/s	190°/s	210°/s	210°/s	210°/s	210°/s

Pose characteristics

100% of rated load, 100% of velocity

Unidirectional pose repeatability
RP = 0,4 mm

Resolution

Less than 0.01° on each axis.

3.9 External Axes (Not available for IRB 6400C)

An external axis can be either:

- an AC motor (IRB motor type or similar) controlled via a drive unit mounted in the cabinet, with the maximum of one drive unit, (see Figure 38) or
- a DC/AC motor controlled via an external drive unit (see Figure 39).

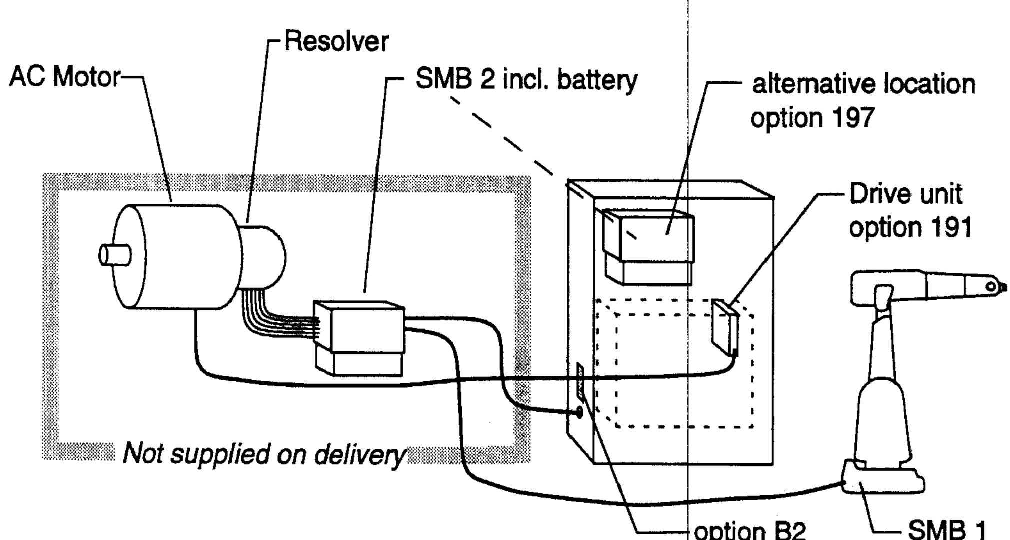

Figure 38 External axes with an internal drive unit (option 191).

Resolver	Connected to motor shaft Transmitter type resolver Voltage ratio 2:1 (rotor: stator)
Resolver supply	5.0 V/4 kHz

Absolute position is accomplished by battery-backed resolver revolution counters in the serial measurement board (SMB).

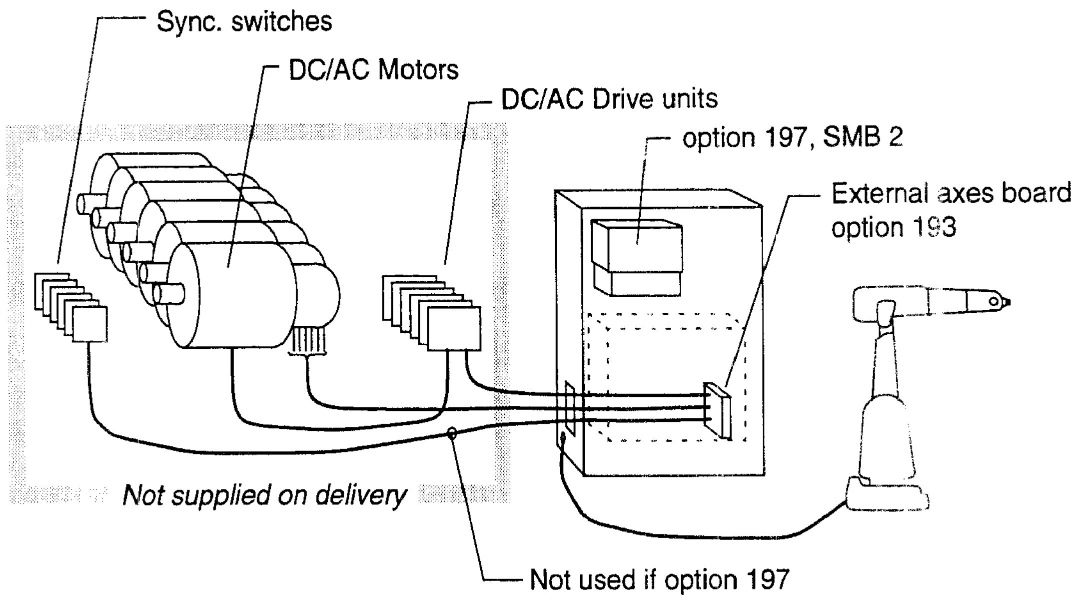

Figure 39 External axes with external drive units.

Speed reference to drive unit	± 10 V analog
Motor speed	Maximum 3000 r.p.m.
POWER OK	24 V DC from controller
Sync. switch	24 V DC
Resolver specification	Transmitter type resolver
	Voltage ratio 2:1 (rotor: stator)
Resolver supply	5.6 V/2 kHz (option 193)
Resolver supply	5.0 V/4 kHz (option 197)

Absolute position is accomplished by battery backed up resolver revolution counters in the serial measurement board (SMB 2).

Relative position is accomplished by defining the synchronization position, by use of synch switches, each time the robot is powered on.

3.10 Inputs and Outputs

Types of connection

The following types of connection are available:

- Connectors on the side of the cabinet
- Screw terminals
- Screw terminals with relay units
- Air and signal connections to upper arm

For more detailed information, see Chapter 4: *Specification of Variants and Options.*

I/O boards

Several I/O boards can be used. The following table shows the number of signals that can be used on each board.

Type of board	Digital		Analog			Max. no of boards[1] of each type	Power supply
	In	Out	In	Voltage output	Current output		
System board	3					Standard	Internal
Digital I/O	16	16				6	Internal/External[2]
Analog I/O			4	3	1	1[33]	Internal/External
AD Combi I/O	16	16		2		1[3]	Internal/External[2]
Remote I/O Allen Bradley	128	128				1[4]	

1. A total of up to six I/O boards (but max 256 signals), in addition to the system board, can be installed.
2. The digital signals are supplied in groups, each group having 8 inputs or outputs.
3. A maximum of one board with analog signals.
4. Takes up two board slots.

Signal data

Digital inputs	(options 20x/238 + 31x/33x)	
	Optically-isolated	
	Rated voltage supply, 19-35 V,	24 V DC
	Logical voltage levels: "1"	15-35 V
	"0"	0-5 V
	Input current at rated input voltage:	5.5 mA
	Maximum potential difference:	500 V
	Time intervals: hardware	≤ 8 ms
	software: single inputs	1-15 ms
	several single inputs	1-20 ms
	System board time intervals: hardware	≤ 1,5 ms
	software: single inputs	< 5 ms
	several single inputs	< 15 ms
Digital outputs	(options 20x/238 + 31x/33x)	
	Optically-isolated, short-circuit protected	
	Voltage supply, 19-35 V, nominal	24 V DC
	Minimum voltage drop on output:	2 V
	Load per output:	200 mA
	Load per group of 8 outputs:	1 A
	Maximum potential difference:	500 V
	Time intervals: hardware	< 150 µs
	software, normal case:	
	single outputs	< 2 ms
	several single inputs	2-10 ms
	software, several serial channels running:	
	single outputs	< 5 ms
	several single inputs	5-20 ms
Digital outputs via relay unit	(options 20x/238 + 37x)	
	Load per output:	4 A
	Load per group of 8 outputs	6.3 A
	Voltage range (source):	250 V AC

Digital inputs via 120 V AC modules	(options 20x/238 + 35x)	
	Voltage range:	90–140 V
	Input current:	< 8 mA
Digital outputs via 120 V AC modules	(options 20x/238 + 35x)	
	Load per output:	1.25 A
	Voltage range (source):	24–140 V AC
	Frequency range (source):	25–70 Hz
	Maximum potential difference:	2 kV
Analog inputs	(options 227 + 31x/33x)	
	2 with switching frequency:	10 Hz for the input filter
	2 with switching frequency:	100 Hz for the input filter
	Input impedance:	1 Mohm
	Input voltage:	±10 V
	Resolution:	10 mV (10/1024 V)
	Accuracy:	15 mV + 0.2% of input signal
	Maximum potential difference:	500 V
Analog outputs	(options 227/238 + 31x/33x)	
	Voltage outputs	
	Output voltage, Analog board:	± 10 V (H 27)
	Output voltage, AD Combi board:	0 - +10 V (H 38)
	Load:	> 2 kohm
	Resolution:	10 mV (10/1024 V)
	Accuracy:	25 mV + 0.5% of output signal
	Maximum potential difference:	500 V
	Current output	
	Output current:	± 20 mA
	Load:	< 450 ohm
	Resolution:	20 µA (20/1024 mA)
	Accuracy:	60 µA + 0.5% of output current
	Maximum potential difference:	500 V

Signal connections on robot arm

Signals	23	50 V, 250 mA
Power	10	250 V, 2 A
Protective earth	1	
Air	1	Max. 10 bar, inner hose diameter 11 mm

System signals

Signals can be assigned to special system functions. Several signals can be given the same functionality.

Digital outputs	Motors on/off
	Executes program
	Error
	Automatic mode
	Emergency stop
	Restart possible

Digital inputs	Motors on/off Starts program from where it is Starts program from the beginning Stops program Stops program when the program cycle is ready Executes "trap routine" without affecting status of stopped regular program[1] Loads and starts program from main[1] Resets error Resets emergency stop Synchronizes external axes
Analog output	TCP speed signal

1. Program can be decided when configuring the robot.

3.11 Serial Communication

The robot has four serial channels - three RS232 and one RS485 - which can be used to communicate with printers, terminals, computers and other equipment.

The speeds the serial channels can use are:

- 300-19200 bit/s for RS232
- 300-38400 bit/s for RS485

(Max 1 channel with speed 19200 bit/s or more)

Character-based or binary information can be transferred using RAPID instructions.

In addition to this, a Robot Application Protocol (RAP) based on MMS functionality, can be used. The following functions are supported:

- Start and stop program execution
- Transfer programs to/from the robot
- Transfer files to/from the robot
- Read the robot status
- Read and write data
- Read and write output signals
- Read input signals
- Read error messages
- Change the robot mode

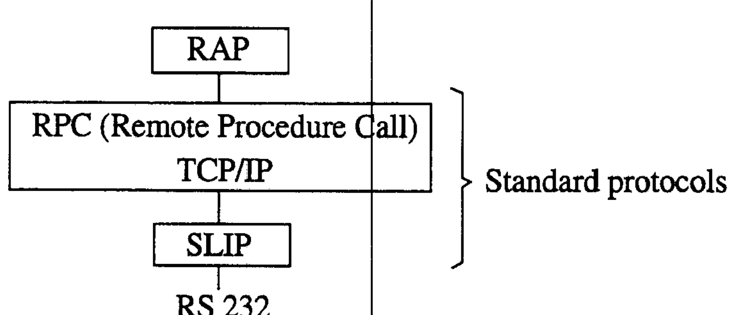

3.12 SpotWare

A few examples of some useful functions available in a system in which SpotWare is installed are given below. Thanks to its flexible design, SpotWare is easy to use and the system can be easily customized for new requirements.

Adaptation to different equipment

The robot can handle different types of weld timers and weld guns. The signals used and the timing sequence between the weld controller, the weld gun and the robot motion can be easily adapted to new or modified requirements.

Closing the gun

It is possible to start closing the spot welding gun before reaching the programmed point. By defining a time of closure, the gun can be closed correctly regardless of the speed of the robot at that time. The cycle time is optimized when the gun is just about to close at the instant when the robot reaches the programmed point.

Customized Move enable

The movement after a completed spot weld can be configured to start either on a user defined input signal or a delay time after weld ready.

Immediate move after Move enable

The robot moves immediately when enable is given. This is achieved by preparing the next action while waiting for the actual weld to be completed.

Simulation of weld timer

The program can be test run without connecting a weld timer or spot welding gun. This makes testing easier.

Gun control

The system supports double guns, small and large strokes and gun pressure control. Several guns can be controlled in the same program.

Testing the program

The program can be run one instruction at a time, both forwards and backwards. When it is run backwards, only motion instructions, together with an inverted gun movement, are executed. This makes the program easier to test.

Rewelds

A function that can be configured to order one or more automatic rewelds or, when the system is restarted after an error, a manual reweld.

Process error routines

In the event of a process error, installation-specific routines, such as go-to-service position, can be ordered manually. When the appropriate routine has been performed, the weld cycle continues from where it was interrupted.

In addition to the above functions specific to SpotWare, the following general functions can be used when spot welding:

Stationary Gun

When a fixed gun is used whilst the robot is holding a workpiece, that workpiece is moved and reoriented in relation to the fixed gun to get the correct path on the workpiece.

Object coordinate system

Programming is carried out in the coordinate system of the programmed object (e.g. of a car). This makes programming easier.

Restart

It is possible to restart the program and keep the same path and process control after an emergency stop, a process stop or after a power failure.

Tool displacement

The program does not have to be readjusted after a tool is changed or displaced if, for example, there is a collision. Just the new dimensions of the tool have to be defined. Automatic tool measurement is supported.

Manual servicing routines

Servicing routines can be easily adapted to, for example, tip dress, go-to-service position/go-to-home position and calibration of gun closing time.

Application error handling

In addition to built-in handling of process errors, there are comprehensive tools for installation-specific error handling, generating customized error messages and logging plant-specific events.

Interface signals

The following process signals are, if installed, handled automatically by SpotWare.

Digital outputs	Description
start 1	start signal to the weld timer (tip 1)
start 2	start signal to the weld timer (tip 2)
close tip 1	close gun (tip 1)
close tip 2	close gun (tip 2)
work select	select work or retract stroke of the gun
program parity	weld program parity bit
reset fault	reset the weld timer
process error	operator request is set when an error occurs
current enable	weld inhibit to the weld timer
p2 request	set pressure 2
p3 request	set pressure 3
p4 request	set pressure 4

Digital output groups	Description
program no.	weld program number

Digital inputs	Description
weld ready 1	weld, started with start 1, is finished
weld ready 2	weld, started with start 2, is finished
tip 1 open	the gun (tip 1) is open
tip 2 open	the gun (tip 2) is open
tip 1 retract	the gun (tip 1) opened to retract stroke
tip 2 retract	the gun (tip 2) opened to retract stroke
p1 OK	pressure 1 is reached
p2 OK	pressure 2 is reached
p3 OK	pressure 3 is reached
p4 OK	pressure 4 is reached

3.13 ArcWare

Configuration

In order to facilitate installation and to achieve optimum performance, ArcWare is configured on delivery for the used equipment.

Interface signals

The following process signals are, if installed, handled automatically by ArcWare, making it possible to operate weld controllers with digital, analog and combined interfaces. The robot can also support dedicated signals for workpiece manipulators and sensors. Other signals can also be used, but this requires some basic RAPID programming.

Digital outputs	Description
Power on/off	Turns weld on or off
Gas on/off	Turns gas on or off
Wire feed on/off	Turns wire feed on or off
Wire feed direction	Feeds wire forward/backward
Weld error	Weld error
Error information	Digital outputs for error identification
Weld program number	4-bit parallel port for selection of program number, or 3-bit pulse port for selection of program number

Digital inputs	Description
Arc OK	Arc established; starts weld motion
Voltage OK	Weld voltage supervision
Current OK	Weld current supervision
Water OK	Water supply supervision
Gas OK	Gas supply supervision
Wire feed OK	Wire supply supervision
Manual wire feed	Manual command for wire feed
Weld inhibit	Blocks the welding process
Weave inhibit	Blocks the weaving process
Stop process	Stops/inhibits execution of arc welding instructions

Wirestick error	Wirestick supervision
Supervision inhibit	Program execution without supervision

Analog outputs	**Description**
Voltage	Weld voltage
Wire feed	Velocity of wire feed
Voltage adjustment	Voltage synergic line amplification
Current adjustment	Current synergic line amplification

Arc welding functions

A large number of dedicated functions are available, making it possible to customize the welding sequence and the I/O communication with the welding equipment to meet most needs.

The main process functions are:

- Gas purge
- Gas preflow
- Gas postflow
- Material heating
- Arc restart
- Automatic weld retry
- Scrape start
- Weld weaving
- Crater filling
- Wire burnback
- Wire rollback
- Material cooling
- Current control and monitoring
- Gas control and monitoring
- Water control and monitoring
- Wire feed control and monitoring
- Weld error report and logging
- Weaving (zigzag, triangular or V-shaped)
- Seam tracking using weld guide

The most important manual functions are:

- On-line process tuning of:
  - Weld speed
  - Wire feed
  - Voltage
  - Weaving amplitude
  - Weave bias
  - Weave height
- Process blocking:
  - Welding
  - Weaving

4 Specification of Variants and Options

The different variants and options for the IRB 6400 are described below.
The same numbers are used here as in the Specification form.

020 ROBOT VERSION

		Option included
IRB 6400		
022	IRB 6400 /2.4-120	
023	IRB 6400 /2.4-150	
024	IRB 6400 /2.8-120	
026	IRB 6400 /3.0-75	
027	IRB 6400S /2.9-120	04y
028	IRB 6400PE /2.25-75	04y, 05x
032	IRB 6400F /2.4-120	04y
033	IRB 6400F /2.4-150	04y
034	IRB 6400F /2.8-120	04y
036	IRB 6400F /3.0-75	04y
037	IRB 6400FS /2.9-120	04y
IRB 6400C		
022	IRB 6400C / B-120	
023	IRB 6400C / B-150	
024	IRB 6400C / R-120	
025	IRB 6400C / R-150	
026	IRB 6400C/ L-120	
027	IRB 6400C / L-150	

IRB 6400 Application, Mounting / Reach-Handling capacity

Application:	PE	Robot adapted for poke welding as in Chapter 3.4.
	F	Robot adapted for foundry environments. Degree of protection as in Chapter 3.4. The manipulator is specially painted and finished.
Mounting:	-	Floor-mounted manipulator.
	S	Shelf-mounted manipulator.
Reach:		Specifies the max. reach at the wrist centre.
Compact version:	C	(B) Bend-Back, (R) Turn-Back Right Side, (L) Turn-Back Left Side
Handl. capacity:		Specifies the max. handling capacity.

040 APPLICATION INTERFACE

Air supply and signals for extra equipment to upper arm.

04y Integrated hose for compressed air. There is an inlet at the base and an outlet on the moveable part of the upper arm. Connections: R1/2".

For connection of extra equipment on the manipulator there are cables integrated into the manipulator's cabling, and two connectors, one Burndy 23-pin UTG 018-23S and one Burndy 12-pin UTG 014-12S, on the moveable part of the upper arm.

This option is standard on the S /2.9-120, PE /2.25-75 and all Foundry versions.

One of the following alternative options, 045 or 65x, must be selected

045 The signals are connected directly to the robot base to one Burndy 12-pin UTG 014-12P (R1.CP), and one Burndy 23-pin UTG 018-23P (R1.CS) connector (see Figure 40). The cables from the manipulator base are not supplied.

65x The signals are connected to the controller.
Cables for connection to contacts R1.CP and R1.CS are supplied.

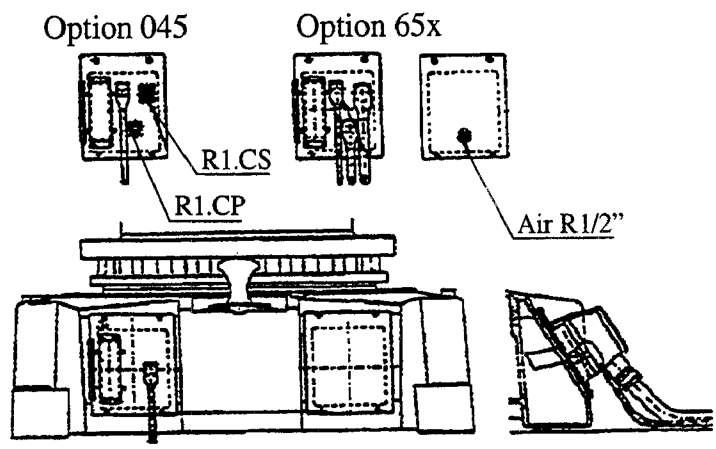

Figure 40 Connection of signals to the base.

050 COOLING DEVICE FOR AXIS 1 MOTOR

051 PT adaption for IRB 6400/ 2.8-120.
When using version 2.8-120 as in the technical specification "Handling capacity for IRB 6400/ 2.8-120 in presstending applications", a cooling device must be installed for axis 1. This option consists of a fan fitted to the frame on the side of the motor for axis 2, (see Figure 41) connected to the controller by means of the control cable for the motors. The fan (230 V AC) starts operating in the MOTORS ON mode. It exhausts air through a replaceable filter. Replacement filters (3) are supplied with the extra cooling device.

05x Cooling motor axis 1
If a cooling device is used on axis 1 the robot can be used for heavy duty on this axis. On version S /2.9-120, the fan is fitted to the side of the motor for axis 3. The cooling device is supplied as standard on version PE /2.25-75.
The cabling included with the Spot Welding system for TG can not be used together with a fan.
This option is not intended for use in Foundry versions.

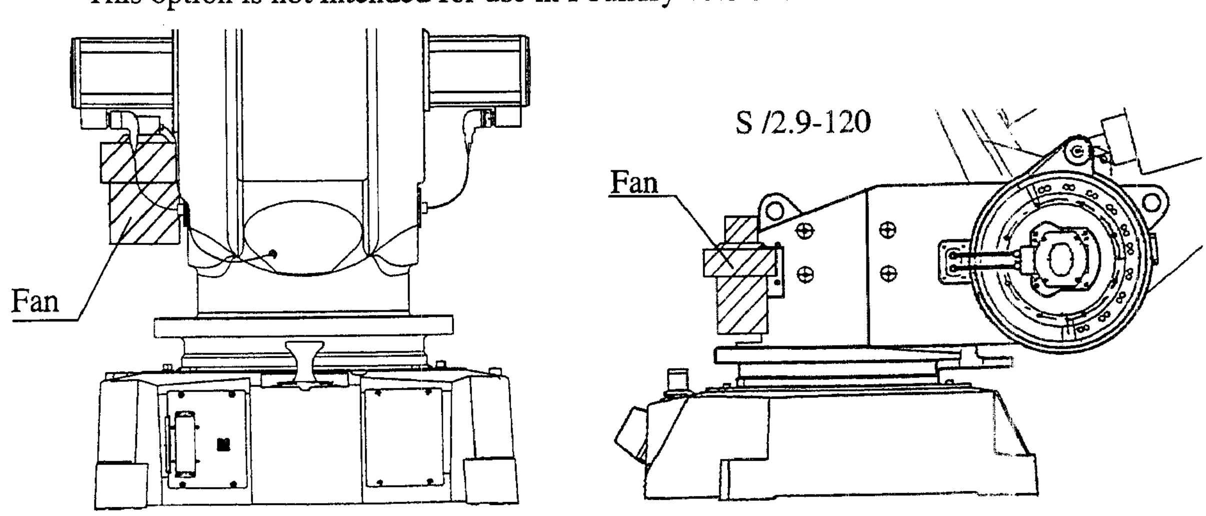

Figure 41 Location of the fan on the manipulator.

060 LIFTING DEVICE

IRB 6400

06x Lifting device on the manipulator for fork-lift is mounted at delivery.
Lifting eyes for use with an overhead crane are included as standard.

IRB 6400C

06x Lifting eyes for crane lift to be assembled by the user.
Lifting device for fork-lift is standard.

070 POSITION SWITCH

Position switches indicating the position of one or two of the main axes. Rails with separate adjustable cams are attached to the manipulator. The cams, which have to be adapted to the switch function by the user, can be mounted in any position in the working range for each switch.

The position switch device is delivered as a kit to be assembled when installing the robot. Assembly instruction is included.

The signals are connected to the controller (see Figure 48), by a separate cable from the manipulator base, R1.SW, (see Figure 42 and Figure 40).

Note. This option may require external safety arrangements, e.g. light curtains, photocells or contact mats.

IRB 6400 Axis 1

1, 2 or 3 switches indicating the position of axis 1.
Switch type: Telemecanique XCK-J161, 2 pole N/C + N/O. Acc. to EN 50041.

07x 1 switch
08x 2 switches
09x 3 switches

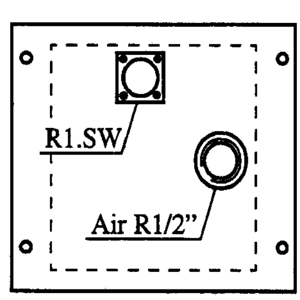

Figure 42 Connection of position switch signals to the base.

IRB 6400C Axis 2 and axis 3

1, 2 or 3 switches indicating the position of **axis 2**

071 1 switch, axis 2
072 2 switches, axis 2
073 3 switches, axis 2

081 2 switches indicating the position of **axis 3**

080 GAS PRESSURE IN THE BALANCING SYSTEM AT DELIVERY

IRB 6400C

The balancing system for the first axis is NOT supplied with gas pressure. Before commissioning of the robot, the balancing system has to be charged with nitrogen to a pressure of maximum 140 bar. The volume of the system is 2.6 litres.

089 The balancing system for the first axis is supplied with gas pressure (Nitrogen gas).

120 CONNECTION OF THE MANIPULATOR CABLES

The cables from the manipulator can be connected to the controller in two different ways:

121 Cable connections on left-hand side of the cabinet (see Figure 2 in Description).

122 Cable connections on roof (see Figure 43).

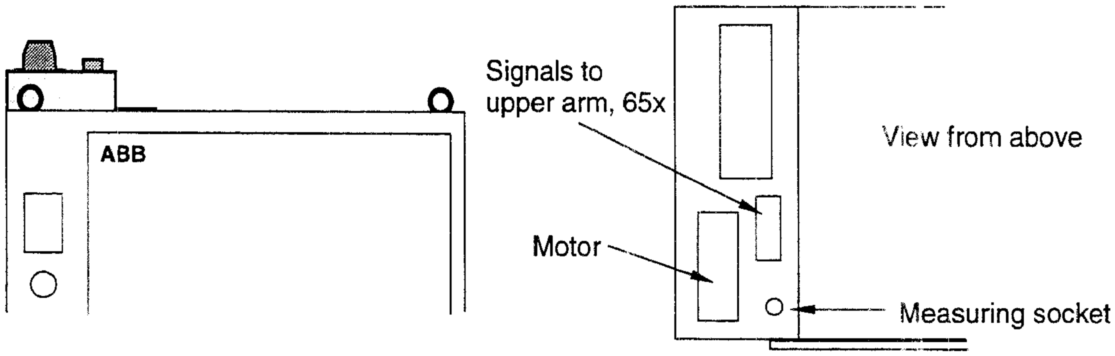

Figure 43 Cable connections on the roof of the cabinet.

130 CONNECTION OF MAINS

The power is connected either inside the cabinet or to a connector on the cabinet's left-hand side. The cable is not supplied. If option 132-134 is chosen, the female connector (cable part) is included.

131 Cable gland for inside connection.
Diameter of cable: 11-12 mm.

Connection via a power intake in accordance with IEC 309-1, -2, and CEE 17 standards (see Figure 44). Only for 400V mains voltage.

132 16 A, 380-415 V, 3p + PE
133 32 A, 380-415 V, 3p + PE
135 16 A, 380-415 V, 3p + N + PE
136 32 A, 380-415 V, 3p + N + PE

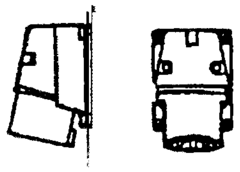

Figure 44 CEE male connector.

134 Connection via an industrial Harting 6HSB connector in accordance with DIN 41640 (see Figure 45).
35 A, 600 V, 6p + PE

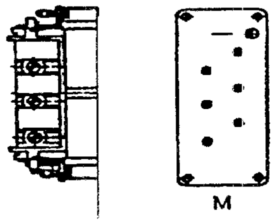

Figure 45 DIN male connector.

140 MAINS SWITCH

141/142 Rotary switch in accordance with the standard in section 3.2 and IEC 337-1, VDE 0113.

143/144 Rotary switch acc. to 141/142 with a 16 A circuit breaker for short circuit protection of main cables in the cabinet. Circuit breaker approved in accordance with IEC 898, VDE 0660.

145/146
147/148 Front-operated flange disconnect switch in acc. with the standard in section 3.2 with integrated 20 A circuit breaker for short circuit protection of main cables in the cabinet. The door is mechanically interlocked when the switch is in the ON position. See table for I/O terminals (Figure 47). Occupies two modules.

150 MAINS VOLTAGE

The robot can be connected to a rated voltage of between 200 V and 600 V, 3-phase + protective earthing. A voltage fluctuation of +10% to -15% is permissible in each connection.

151-	Transformer 1	Transformer 2	Transformer 3
178	200 V		
	220 V		
	400 V	400 V	
		440 V	
		475 V	475 V
		500 V	500 V
			525 V
			600 V

180 OPERATOR'S PANEL

The operator's panel and teach pendant holder can be installed either

181 on the front of the cabinet, or

182 in a separate operator's unit.
All necessary cabling, including flange, connectors, sealing strips, screws, etc., is supplied.
Cable length: 15 m. External enclosure is not supplied.

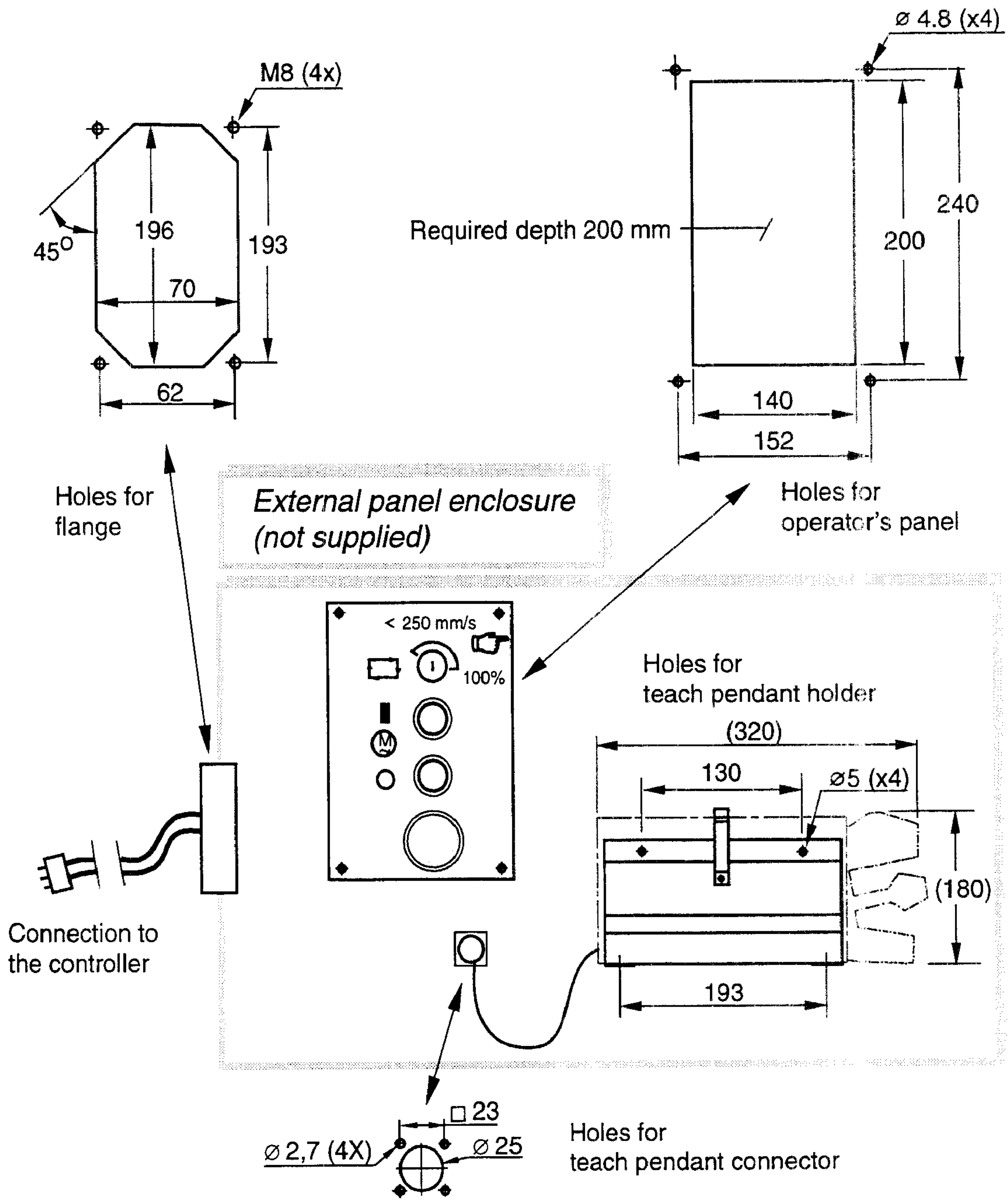

Figure 46 Required preparation of external panel enclosure (all dimensions in mm).

190 EXTERNAL AXES (Not available for IRB 6400C)

191- B2 The controller is equipped with an integrated drive unit for an external axis. The resolver can be connected to a serial measurement board (not supplied) outside the controller or to one that is built in (option 197).

The motor is connected to a standard industrial 64-pin female connector, in acc. with DIN 43562, on the left-hand side of the cabinet. For the corresponding male connector, see option 67x.

A1 The drive unit is of type C for 7 amps current.

A2 The drive unit is of type T for 15 amps current.

193 External axes board.
Signal interface for external axes with external drive units. Six external axes (5 if combined with option 191) can be connected. The signals (speed reference, supply to and feedback from resolvers and sync. switches) are accessible in a standard industrial 64-pin female connector, in acc. with DIN 43562, on the left-hand side of the cabinet. For the corresponding male connector, see option 67x. If any axis is to be positioned absolutely when the power is switched on, a serial measurement board (option 197) is required.

197- C2 Serial measurement board.
Signal interface to external axes with absolute position at power on. The board is located in the cabinet. See Figure 47 for I/O terminal limitations. The board occupies one module.

The resolvers are connected to a standard industrial 64-pin female connector, in acc. with DIN 43562, on the left-hand side of the cabinet. For the corresponding male connector, see option 67x.

200 I/O BOARDS

The robot can be equipped with up to 6 I/O boards. For more details, see Technical Specification 3.10.

20x Digital I/O board: 16 inputs/16 outputs.

227 Analog I/O board: 4 inputs/4 outputs; max. 1 board.

238 AD Combi I/O board: 16 digital inputs/16 digital outputs and 2 analog outputs (0-10V); max. 1 board.

241 Remote I/O board for Allen Bradley; max. 1 board.
Up to 128 digital inputs and outputs, in groups of 32, can be transferred serially to a PLC equipped with an Allen Bradley 1771 RIO node adapter. Connection is made via screw terminals on the rear side of the swing-out frame. The RIO board occupies two board slots in the rack.

300 CONNECTION OF I/O BOARDS

Space available for I/O boards and I/O connections.

		In the I/O rack	On the outside left wall	On the inside rear wall		
Space available	CABINET	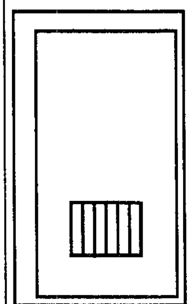 The cabinet rack has 6 slots available for I/O boards	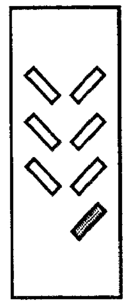 The cabinet left wall has space for a total of 7 connectors for connection of I/O boards ▱ = from digital board ▰ = from analog board	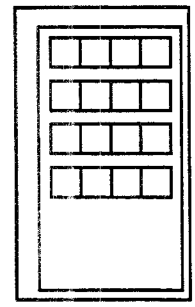 The cabinet rear wall has 16 modules available for the options below □ = 1 module		
Space needed	200 I/O BOARDS		300 CONNECTION OF I/O BOARDS			
			External connectors Option: 31x	Screw terminal Option: 34x	120 V AC modules Option: 35x	Relay units Option: 37x
	20x Digital 24 V DC qty = Z	▯ • Z	▱ • Z	□ • Z	□□ • Z	□□ • Z
	227 Analog 4 in/4 out	▯	▰	□		
	238 AD Combi I/O	▯	▱ ▰	□□	□□□	□□□
	241 RIO board Allen Bradley	▯▯				
	140 MAINS SWITCH 145/146 and 147/148 Flange disconnect with circuit breaker			□□		
	180 OPERATOR's PANEL 182 External		▱			
	190 EXTERNAL AXES 197 Serial measurement board C2 External connector		▱	□		
	430 POWER SUPPLY TO SERVICE OUTLETS AND LIGHTING 433 Additional transformer			□□		

Figure 47 Table for limitation of I/O connections to the system

Different signal connections can be selected:

31x External connectors.
Standard industrial female connectors, 64-pin plugs in accordance with DIN 43652, located on the left-hand side of the cabinet. For corresponding male connectors, see option 67x.

33x Screw terminals.
Signal connections can be connected to different types of terminals.
The terminals are mounted on standard EN 50022 mounting rails (see Figure 48).
The total number of terminals are given in the table above.

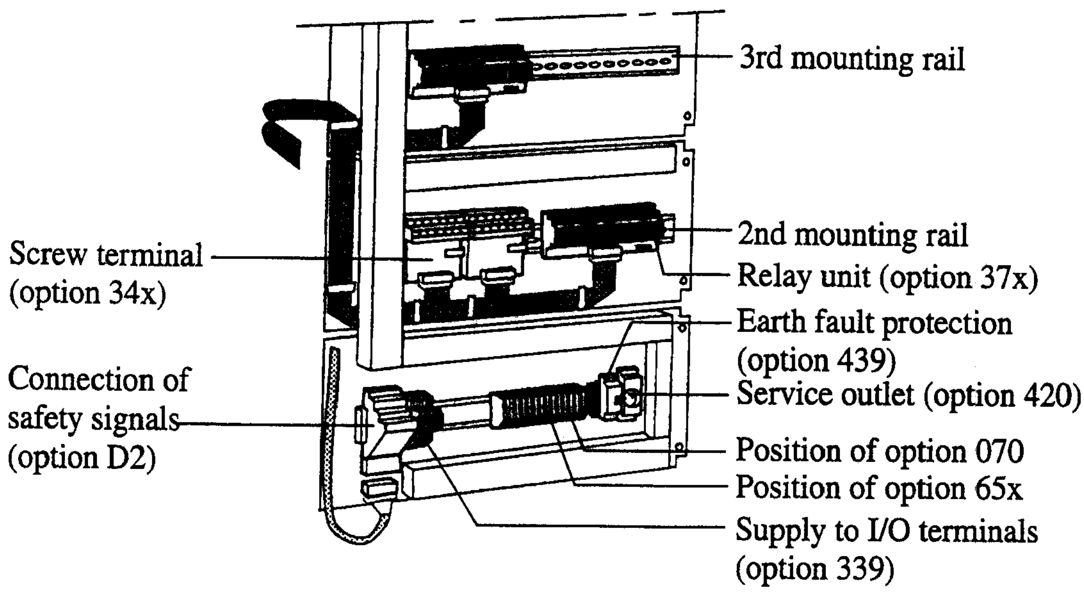

Figure 48 The terminal units are mounted on the rear wall inside the cabinet.

Terminal units for I/O boards.

34x Screw terminal units, digital I/O and analog I/O.
Occupies one module.
(see Figure 49).

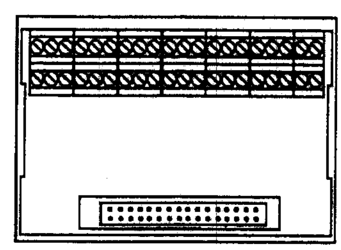

Figure 49 Screw terminal.

37x Relay unit, digital I/O.
Terminal with 16 relays to be used when more current or voltage is required from the digital outputs.
The inputs are not separated by relays.
This option can be combined with 34x. Occupies two modules (see Figure 50).

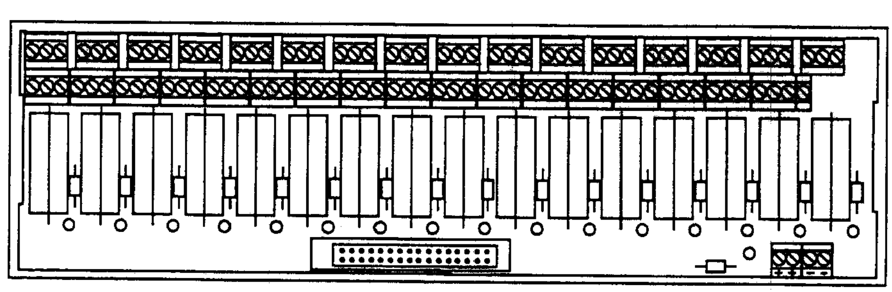

Figure 50 Relay unit.

35x 120 V AC modules, digital I/O
Solid state modules for both inputs and outputs. Occupies two modules (see Figure 51).

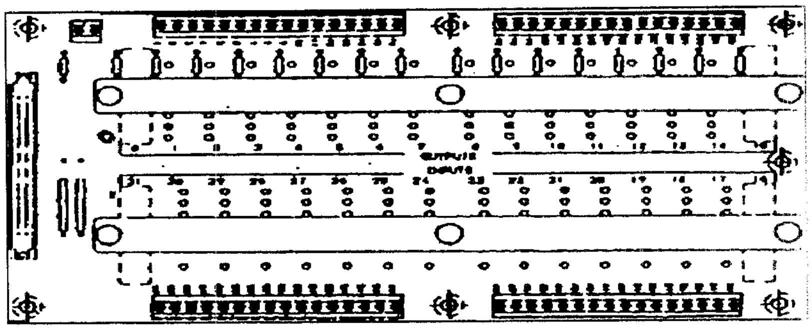

Figure 51 120 V AC Module.

Connections between terminal units and connectors

38x External connectors using screw terminals.
All signals are connected to 64-pin male connectors in accordance with DIN 43652 with pin arrangement according to the Product Manual. For corresponding female connectors see option 68x.

390 As above (38x), but the user determines wire routing by filling in a wiring specification.

339 Supply to I/O terminals via fused terminals.
Eight 2 A fuses to protect the 24 V wiring supplied (see Figure 48). The fuse terminals are connected from the robot's 24 V DC supply or, if 38x is chosen, from external supply to screw terminal units (option 34x), relay unit (option 37x) or external connectors (option 31x).

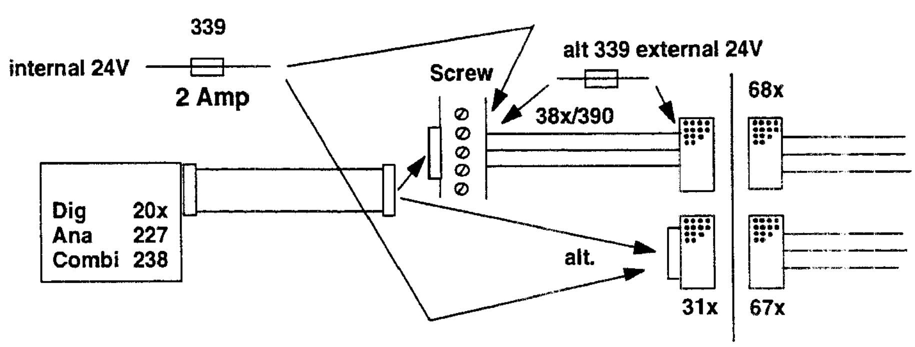

Figure 52 Alternatives for I/O connections.

395 CONNECTION OF SAFETY SIGNALS

D1 External connectors.
Standard industrial 64-pin female connectors, in acc. with DIN 43652, located on the left-hand side of the cabinet. For corresponding male connectors, see option 67x.

D2 Screw terminal.
Terminal on the 1st mounting rail (see Figure 48).

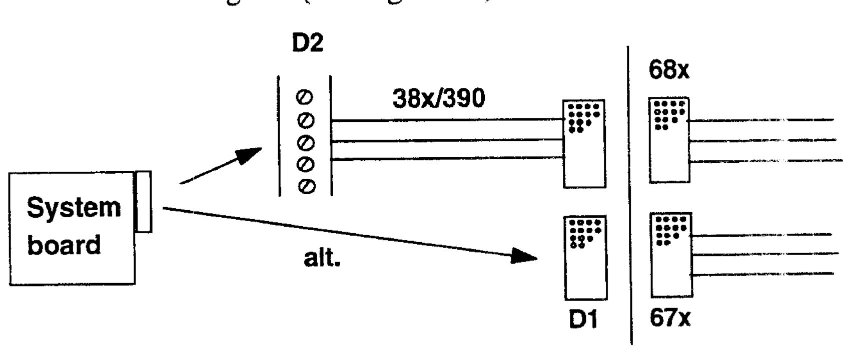

Figure 53 Alternative connections of safety signals.

400 ADDITIONAL EQUIPMENT

The robot can be supplied with one or more of the following options:

404 Extended memory 2 Mb.
405 Extended memory 4 Mb.
409 Extended memory 12Mb.

The table below shows memory available for the user:

	Program memory	Ramdisk
Standard memory	1 Mbyte	0.4 Mbyte
404 Extended 2 Mb	3 Mbyte[1]	0.4 Mbyte
405 Extended 4 Mb	4 Mbyte[1]	1.4 Mbyte
409 Extended 12 Mb	4 Mbyte[1]	9 Mbyte

[1] Reduced by 1 Mbyte if option 593 is chosen

406 Cabinet lighting
The cabinet can be supplied with internal lighting, which switches on when the door is opened. The lighting is installed in the upper part of the cabinet.

407 Cabinet on Castor wheels.

410 SERIAL COMMUNICATION CONNECTION

411 One 25-pin female connector (D-sub) on cabinet front for print-outs. Connected to one RS232 channel.

412 Four channels on screw terminal. The screw terminals are mounted on the inside right-hand wall. Connected to three RS232 channels and one RS485.

413 One connector on cabinet front for print-outs. Connected to one RS232 channel. Three channels on screw terminal. Two are connected to RS232 channels and one is connected to RS485.

420 SERVICE OUTLETS

Any of the following standard outlets with protective earthing can be chosen for maintenance purposes. The outlet is installed on the lowest mounting rail.
The maximum load permitted is 500 VA (max. 100 VA when the cabinet door is closed).

421 230 V mains outlet in accordance with DIN VDE 0620; single socket suitable for Sweden, Germany and other countries.

422 230 V in accordance with French standard; single socket.

423 120 V in accordance with British standard; single socket.

425 120 V in accordance with American standard; double socket, Harvey Hubble.

430 POWER SUPPLY TO SERVICE OUTLETS AND LIGHTING

The service outlets and lighting can be powered in three different ways (see Figure 54).

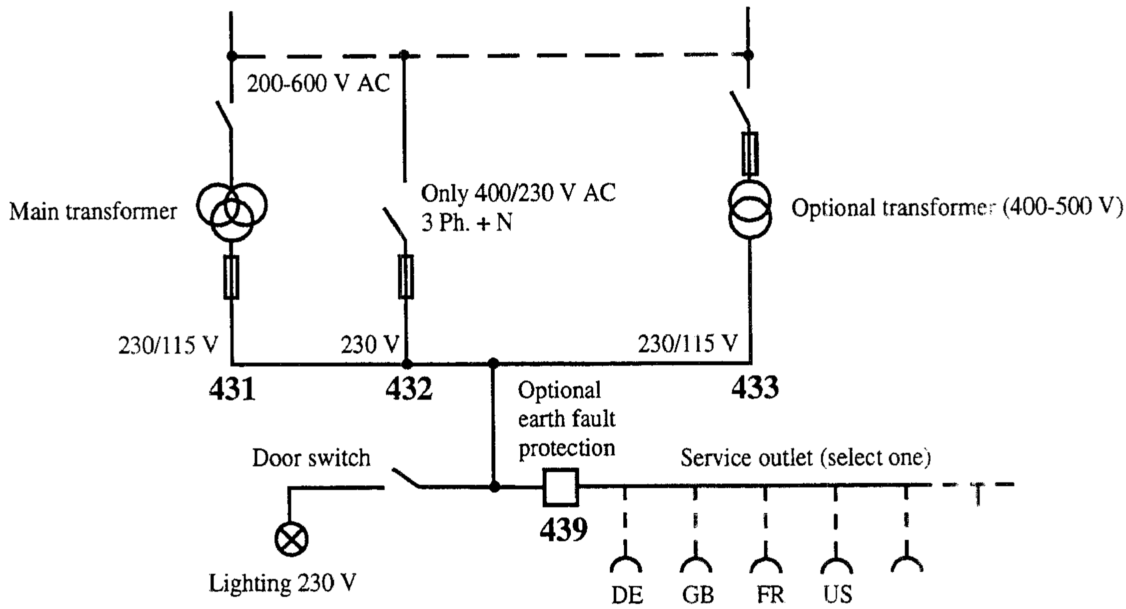

Figure 54 Service outlet and lighting options.

431 Connection from the main transformer.

The voltage is switched on at the mains switch on the front of the cabinet.

432 Connection before mains switch without transformer.
Note this only applies when the mains voltage is 400 V, three-phase with neutral connection and a 230 V service socket.
Cannot be combined with CEE intakes 132, 133, as there is no neutral connection.
Note. Connection before mains switch is not in compliance with some national standards, NFPL 79 for example.

433 Connection before mains switch with transformer 400-500 V and with a secondary voltage of 115 V or 230 V, 2A. See Figure 47 for I/O terminal limitations. Occupies two modules.
Note. Connection before mains switch is not in compliance with some national standards, NFPL 79 for example.

439 Earth fault protection for service outlet.
To increase personal safety, the service outlet can be supplied with an earth fault protection which trips at 30 mA earth current.The earth fault protection is placed next to the service outlet (see Figure 48).
Voltage range: 110 - 240 V AC.

440 COOLING DEVICE

444 Components mounted inside the controller are designed to withstand an ambient temperature of 40° C. To allow ambient temperatures of up to 52° C, installation of externally-powered equipment, or installation of components not designed for the temperature inside the controller (60° - 70° C), extra cooling is required.

Reducing the temperature will increase the lifetime of electronic components. Generally, a 100% increase in the lifetime can be achieved by a 10° C reduction in temperature.

A roof-mounted CFC-free cooling device keeps the internal temperature at 45° C independent of the ambient temperature. The cooling unit starts operating when the internal air exceeds 45° C. A switch on the cabinet door turns the cooling device on and starts a fan for internal air circulation.

620 KIT FOR LIMITING WORKING SPACE

To increase the safety of the robot, the working range of axes 1, 2 and 3 can be restricted by extra mechanical stops.

IRB 6400

621 Axis 1
2 stops which allow the working range to be restricted in increments of 20°.

622 Axis 2
6 stops which allow the working range to be restricted in increments of 20°.

623 Axis 3
6 stops which allow the working range to be restricted in increments of 20°.

624 Axes 1, 2 and 3
Kit including option 621, 622 and 623.

IRB 6400C

621 Axis 1
3 stops which allow the working range to be restricted in increments of 20°.

622 Axis 2
12 stops which allow the working range to be restricted in increments of 10°.

623 Axis 3 (Only available for version / B-120 and / B-150)
7 stops which allow the working range from -180° and higher to be restricted in increments of 20°.

640 CABLE LENGTH; MANIPULATOR – CONTROLLER

The cables between the manipulator and the controller are available in the following lengths:

641 7 m
642 15 m
643 22 m
644 30 m

660 EXTENSION CABLE FOR THE TEACH PENDANT

661 10 m
This can be connected between the controller and the connector on the teach pendant's cable.
A maximum of two extension cables may be used; i.e. the total length of cable between the controller and the teach pendant should not exceed 30 m.

670 SIGNAL CONNECTORS

This option consists of connectors for customer cables to the controller, the number of which depends on the options selected.

67x Industrial male connectors in accordance with DIN 43652

Cover
Plug, 64-pole
100 terminal pins; conducting area 0.14–0.5 mm^2
100 terminal pins; conducting area 0.5–1.5 mm^2
Keying pin

68x Industrial female connectors in accordance with DIN 43652

Cover
Plug, 64-pole
100 terminal sockets, conducting area 0.14-0.5 mm^2
100 terminal sockets, conducting area 0.5-1.5 mm^2

710 DOCUMENTATION

A complete set of documentation existing of:
- Basic Operation, an introduction to the basic operation and programming of the robot, suitable as a tutorial
- User's Guide, with step by step instructions on how to operate and program the robot
- RAPID Reference Manual, a description of the programming language
- Product Manual, a description of the installation of the robot, maintenance procedures and troubleshooting. The Product Specification IRB 6400 is included.

711- 715 English
Swedish
German
French
Spanish

720 EXTRA DOCUMENTATION

Gxy Product Manual IRB 6400, including Product Specification

Hxy Basic Operation

Jxy User's Guide, including Basic Operation

Kxy RAPID Reference Manual

580 ROBOTWARE 2.0

585 Advanced functions.
Includes functions making the following possible in RAPID:
- information transfer via serial channels (e.g. printing production statistics on a printer or to a diskette).
- setting an output a specific distance or time before a position.
- robot motion in an error handler, i.e. during automatic error handling.
- robot motion in a trap routine, i.e. when handling interrupts.

586 Multitasking.
Up to 3 programs (tasks) can be executed in parallel with the normal robot program. These additional tasks start automatically at power on and will continue until the robot is powered off. They are programmed using standard RAPID instructions, except for motion instructions. Communication between the tasks is made via I/O or global data.

The table below shows memory available (approx.) for the different tasks:

		For each task when using		
	Robot program	1 task	2 tasks	3 tasks
Standard memory	0.7 Mbyte	0.2 Mb	-	-
404 Extended 2 Mb	2.1 Mbyte	0.8 Mb	0.3 Mb	0.2 Mb
405 Extended 4Mb	2.8 Mbyte	1.0 Mb	0.5 Mb	0.3 Mb
409 Extended 12 Mb	2.8 Mbyte	1.0 Mb	0.5 Mb	0.3 Mb

If option 593 is choosen the total program memory is reduced by 1 Mbyte.

550 PROCESSWARE 2.0

556 ArcWare
Described in Chapters 2.13 and 3.13.

557 ArcWare Plus
The movement of 2-3 external axes, such as robot carriers or workpiece manipulators, can be fully integrated and coordinated with the movements of the robot.
The configuration must first be checked with ABB Robotics.
Control electronics and drive units need to be added. See options 190 and 290.

558 SpotWare
Described in Chapters 2.12 and 3.12.
585 Advanced functions is included.

559 SpotWare Plus
The internal structure for SpotWare is based on a Multitasking RAPID program.
This gives a number of advantages:
- Increased possibilities of adaptation to various process controls and welding guns.
- Continuous monitoring of the welding equipment.
- Welding independent of positioning.

585 Advanced functions and *586 Multitasking* are included.

590 COMMWARE 2.0

593 RAP Serial link.
Robot Application Protocol (RAP)
Wiring selected from option 410.
Requires option 404, 405 or 409.

530 TEACH PENDANT LANGUAGE

The robot is delivered with the selected language installed. English is also delivered and can be installed.

531 English
532 Swedish
533 German
534 French
535 Spanish
536 Italian
537 Dutch
538 Finnish
539 Japanese (Katakana)

5 Accessories

There is a range of tools and equipment available, specially designed for the robot.

Vision system

- Optimaster robot guidance and inspection.

For more information, see specification 3HAB 0001-68

Arc Weld Equipment

- Weld Power Source
- Wire Feed Systems
- MIG weld Guns
- Workpiece Manipulators

Robot Peripherals

- Track Motion
- Tool System
- Motor Units
- Spot welding system for transformer gun
- Foundation Kit

6 Index

FAC..ref. no..SEROP order no..

Specification Form for Industrial Robot IRB 6400/M94A

IRB 6400

020 ROBOT VERSION
- ❑ 022 IRB 6400 / 2.4-120
- ❑ 023 IRB 6400 / 2.4-150
- ❑ 024 IRB 6400 / 2.8-120
- ❑ 026 IRB 6400 / 3.0-75
- ❑ 027 IRB 6400S / 2.9-120
- ❑ 028 IRB 6400PE / 2.25-75
- ❑ 032 IRB 6400F / 2.4-120
- ❑ 033 IRB 6400F / 2.4-150
- ❑ 034 IRB 6400F / 2.8-120
- ❑ 036 IRB 6400F / 3.0-75
- ❑ 037 IRB 6400FS / 2.9-120

040 APPLICATION INTERFACE
- ❑ 04x No
- ❑ 04y Air and signals to upper arm

connection of signals in;
- ❑ 045 base of manipulator
- ❑ 65x control system

050 COOLING DEVICE FOR AXIS 1 MOTOR

Not with option 32-37
- ❑ No
- ❑ 051 PT adaption for IRB 6400/2.8-120
- ❑ 05x Cooling for axis 1 motor

060 LIFTING DEVICE
- ❑ No
- ❑ 06x For fork lift

070 POSITION SWITCH AXIS 1

Not with option 32-37
- ❑ No
- ❑ 07x One switch
- ❑ 08x Two switches
- ❑ 09x Three switches

IRB 6400C

020 ROBOT VERSION
- ❑ 022 IRB 6400C / B-120
- ❑ 023 IRB 6400C / B-150
- ❑ 024 IRB 6400C / R-120
- ❑ 025 IRB 6400C / R-150
- ❑ 026 IRB 6400C / L-120
- ❑ 027 IRB 6400C / L-150

040 APPLICATION INTERFACE
- ❑ 04x No
- ❑ 04y Air and signals to upper arm

connection of signals in;
- ❑ 045 base of manipulato
- ❑ 65x control system

060 LIFTING DEVICE
- ❑ No
- ❑ 06x For overhead crane lift

070 POSITION SWITCH AXIS 2 AND 3

Sev. comb. poss.
- ❑ 079 No
- ❑ 071 One switch axis 2
- ❑ 072 Two switches axis 2
- ❑ 073 Three switches axis 2
- ❑ 081 Axis 3

080 GAS PRESSURE IN THE BALACING SYSTEM AT DELIVERY
- ❑ 088 No
- ❑ 089 Yes

640 CABLE LENGTH; MANIPULATOR - CONTROLLER
- (❑ 640 No cable)
- ❑ 641 7 m
- ❑ 642 15 m
- ❑ 643 22 m
- ❑ 644 30 m

120 CONNECTION OF THE MANIPULATOR CABLES
- ❑ 121 Left side
- ❑ 122 Roof — Not with option 197

130 CONNECTION OF MAINS
- ❑ 131 Cable gland
- ❑ 132 CEE connector 16A, 3p+PE — Not with option 432
- ❑ 133 CEE connector 32A, 3p+PE — Not with option 432
- ❑ 135 CEE connector 16A, 3p+N+PE
- ❑ 136 CEE connector 32A, 3p+N+PE
- ❑ 134 Harting 6HSB connector 6p+PE

(132–136: Requires option 153 or 163)

140 MAINS SWITCH
- ❑ 141/142 Rotary switch
- ❑ 143/144 Rotary switch with circuit breaker
- ❑ 145/146 Flange disconnect with circuit breaker, max. 475 V — Not with option 166 and 176-178
- ❑ 147/148 Flange disconnect with circuit breaker, max. 600 V

150 MAINS VOLTAGE

Transformer 200-400 V
- ❑ 151 200 V
- ❑ 152 220 V
- ❑ 153 400 V

Transformer 400-500 V
- ❑ 163 400 V
- ❑ 164 440 V
- ❑ 165 475 V
- ❑ 166 500 V

Transformer 475-600 V
- ❑ 175 475 V
- ❑ 176 500 V
- ❑ 177 525 V
- ❑ 178 600 V

180 OPERATOR'S PANEL
- ❑ 181 On control cabinet
- ❑ 182 External, cable length 15m

190 EXTERNAL AXES

Several combinations possible
Not togher with IRB 6400C
- ❑ No
- ❑ 191-B2 1 integrated drive unit

Type of integrated drive unit
- ❑ A1 Drive unit type C
- ❑ A2 Drive unit type T

- ❑ 193 External axes board
- ❑ 197-C2 Serial measurement board — Not with option 122

FAC..ref. no..SEROP order no..

Specification Form for Industrial Robot IRB 6400/M94A

200 I/O BOARDS — Several combinations possible

- ❑ No
- ❑ 20x Digital 24 VDC 16 in/16 out, qty ....
- ❑ 227 Analog 4 in/4 out — Not with 238
- ❑ 238 A D Combi I/O — Not with 227
- ❑ 241 RIO board Allen Bradley

300 CONNECTION OF I/O BOARDS — Is required if option 200 is chosen

- ❑ 31x External connectors
- ❑ 33x Screw terminals

Terminal units for I/O boards

- ❑ 34x Screw terminal units — Can be combined with 37x
- ❑ 37x Relay units, — qty..........
- ❑ 35x 120 V AC modules

Connection between terminal units and connectors

- ❑ No
- ❑ 38x Standard
- ❑ 390 Connectors acc. to attached wiring specification

Supply to I/O terminals via fused terminals

- ❑ 338 No
- ❑ 339 Yes — Not with option 35x

395 CONNECTION OF SAFETY SIGNALS

- ❑ D1 External connectors
- ❑ D2 Screw terminal

400 ADDITIONAL EQUIPMENT — Several combinations possible

- ❑ No
- ❑ 404 Extended memory 2 Mb
- ❑ 405 Extended memory 4 Mb
- ❑ 409 Extended memory 12 Mb
- ❑ 406 Cabinet lighting — See also option 430
- ❑ 407 Cabinet on Castor wheels

410 SERIAL COMMUNICATION CONNECTION

- ❑ No
- ❑ 411 1 connector on cabinet front for print out
- ❑ 412 4 channels on screw terminal
- ❑ 413 1 connector on cabinet front and 3 channels on screw term.

(412, 413:) Recomended for option 591

420 SERVICE OUTLETS — See also option 430

- ❑ No
- ❑ 421 230 V DE, SE standard
- ❑ 422 230 V FR standard
- ❑ 423 120 V GB standard
- ❑ 425 120 V US standard, Harvey Hubble

430 POWER SUPPLY TO SERVICE OUTLETS AND LIGHTING — To be filled in only if option 406 or 420 are chosen

- ❑ 431 From main transformer
- ❑ 432 From mains 230/400 V — Not with option 132 or 133 and requires option 153 or 163
- ❑ 433 Additional transformer — Requires option 163 - 176

Earth fault protection for service outlet

- ☐ No
- ☐ 439 Yes

440 COOLING DEVICE

- ❑ 440 No
- ❑ 444 Yes

620 KIT FOR LIMITED WORKING SPACE — Several combinations possible

- ❑ No
- ❑ 621 Yes for axis 1
- ❑ 622 Yes for axis 2
- ❑ 623 Yes for axis 3
- ❑ 624 Yes for axis 1, 2 and 3 — Not together with IRB 6400C

660 EXTENSION CABLE FOR THE TEACH PENDANT

- ❑ No
- ❑ 661 10 m extension cable

670 SIGNAL CONNECTORS

- ❑ No
- ❑ 67x Male connectors — If chosen 191-B2, 193, 197-C2, 31x or 395-D1
- ❑ 68x Female connectors — If chosen 38x

710 DOCUMENTATION

- ❑ 710 No
- ❑ 711 English
- ❑ 712 Swedish
- ❑ 713 German
- ❑ 714 French
- ❑ 715 Spanish

720 EXTRA DOCUMENTATION

- ❑ No
- ❑ Gxy Product Manual IRB 6400 qty.....
- ❑ Hxy Basic Operation qty.....
- ❑ Jxy User's Guide qty.....
- ❑ Kxy RAPID Reference Manual qty.....

Note! RobotWare should be specified in Specification Form for RobotWare

Product Specification
IRB 6400

3HAB 0001-54/Rev.2
M94A

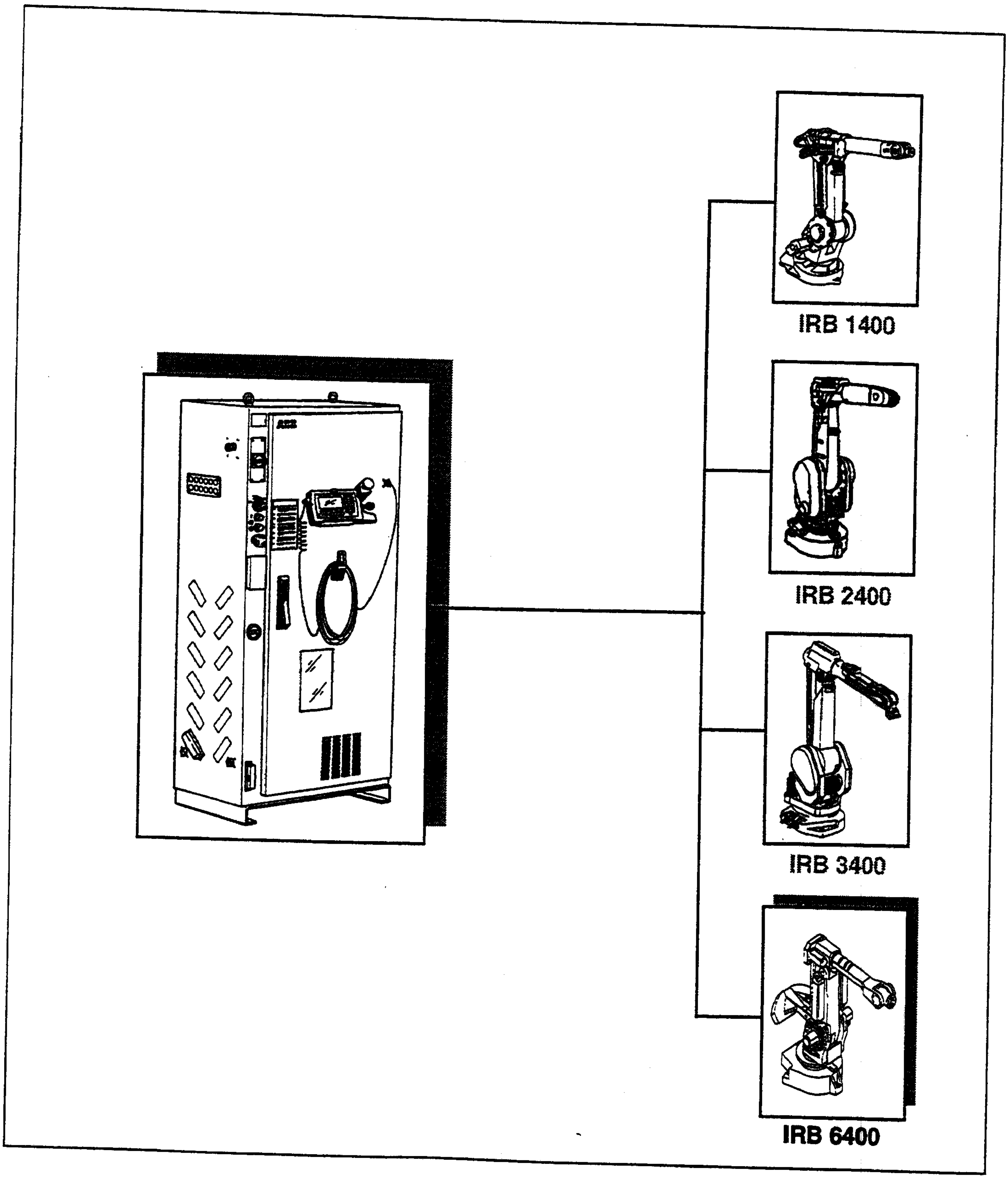

ABB Robotics Products

Article number: 3HAB 0001-54/Rev.2
Issue: M94A

ABB Robotics Products AB
S-721 68 Västerås
Sweden

CONTENTS

1 Introduction

IRB 6400 is a 6-axis industrial robot, designed specifically for manufacturing industries that use flexible robot-based automation. The robot has built-in process ware, an open structure that is specially adapted for flexible use, and can communicate extensively with external systems.

All features are not described in this document. For a more complete and detailed description, please see the User's Guide and Product Manual, or contact your nearest ABB Robotics office.

The IRB 6400 comes in several different versions, with handling capacities of up to 150 kg, a maximum reach of 3 m, floor- or shelf-mounted manipulators as well as manipulators for harsh environments.

Extra equipment, such as transformers and valve packages can be placed on the upper arm or on the base of the manipulator.

Accessories, such as track motion, base plates, motors for external axes, cabling for spot welding guns, and tool systems with tool exchangers, have been specially adapted for use in the IRB 6400.

Different robot versions

The IRB 6400, as mentioned above, is available in several different versions, depending on its arm length, handling capacity or the way it is mounted. The following different robot types are available:

Robot Versions	
IRB 6400/ 2.4-120	IRB 6400F/ 2.4-120
IRB 6400/ 2.4-150	IRB 6400F/ 2.4-150
IRB 6400/ 2.8-120	IRB 6400F/ 2.8-120
IRB 6400/ 3.0-75	IRB 6400FS/ 2.9-120
IRB 6400S/ 2.9-120	
IRB 6400PE/ 2.25 -75	

Definition of version designation

IRB 6400 Application, Mounting/ Reach - Handling capacity

	Prefix	Description
Application	PE	Robot adapted for poke welding
	F	Manipulator adapted for use in harsh environments (e.g. foundry)
Mounting	-	Floor-mounted manipulator
	S	Shelf-mounted manipulator
Reach	x.x	Indicates the maximum reach at wrist centre
Handling capacity	yyy	Indicates the maximum handling capacity

How to use this manual

The characteristics of the robot are described in Chapter 2: *Description*.

The most important technical data is listed in Chapter 3: *Technical specification*.

To make sure that you have ordered a robot with the correct functionality, see Chapter 4: *Specification of Variants and Options*.

In Chapter 5 you can find accessories to the robot.

Chapter 6 contains an *Index*, to make things easier to find.

Other manuals

The Basic Operation manual contains an introduction to the basic operation and programming of the robot. It is recommended to use this manual as a tutorial, together with a robot or the PC software *QuickTeach*™.

The User's Guide is a reference manual with step by step instructions on how to perform various tasks. It also includes a description of the programming language.

The Product Manual describes how to install the robot, as well as maintenance procedures and troubleshooting.

2 Description

2.1 Structure

The robot is made up of two main parts: a manipulator and a controller.

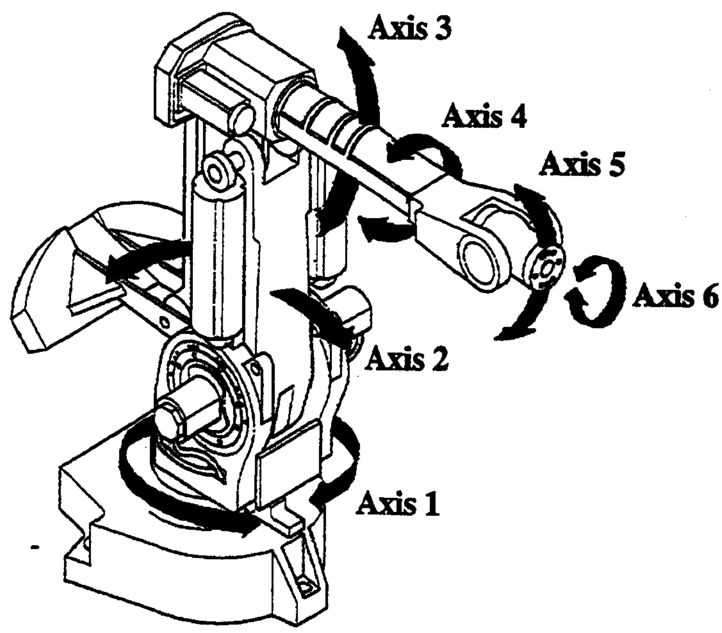

Figure 1 The IRB 6400 manipulator has 6 axes.

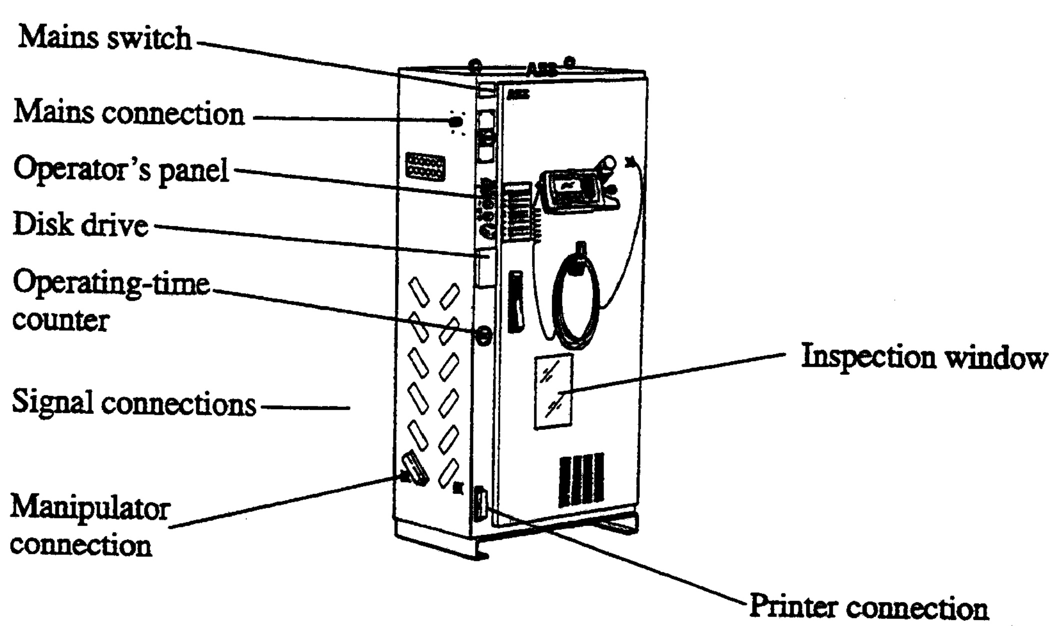

Figure 2 The controller is specifically designed to control robots, which means that optimal performance and functionality is achieved.

The controller contains the electronics required to control the manipulator, external axes and peripheral equipment.

2.2 Safety/Standards

The robot complies fully with the health and safety standards specified in the EEC's machinery directives as well as ANSI/RIA 15.06-1992.

The robot is designed with absolute safety in mind. It has a dedicated safety system based on a two-channel circuit which is monitored continuously. If an error occurs, the electrical power supplied to the motors shuts off and the brakes engage.

The robot can be moved using a joystick without having to look at the teach pendant to find the right key.

Selecting the operating mode
The robot can be operated either manually or automatically. In manual mode, the robot can only be operated via the teach pendant, i.e. not by any external equipment.

Reduced speed
In manual mode, the speed is limited to a maximum of 250 mm/s (600 inches/min.). A speed limitation applies not only to the TCP, but to all parts of the robot. It is also possible to monitor the speed of equipment mounted on the robot.

Overspeed protection
The speed of the robot is monitored by two independent computers.

Emergency stop
There is one emergency stop push button on the controller, and another on the teach pendant. Additional emergency stop buttons can be connected to the robot's safety chain circuit.

Safeguarded space stop
The robot has a number of electrical inputs which can be used to connect external safety equipment, such as safety gates and light curtains. This allows the robot's safety functions to be activated both by peripheral equipment and by the robot itself.

Delayed safeguarded space stop
A delayed stop gives a smooth stop. The robot stops in the same way as a normal program stop with no deviation from the programmed path. After 1-2 seconds the power supplied to the motors shuts off.

Restricting the working space The movement of each axis can be restricted using software limits. Axes 1-3 can also be restricted by means of mechanical stops.

Enabling device
The enabling device on the teach pendant must be used to move the robot when in manual mode. The enabling device consists of a switch with three positions, meaning that all robot movements stop when either the enabling device is pushed fully in, or when it is released completely. This makes the robot safer to operate.

Hold-to-run control
"Hold-to-run" means that you must depress the Program start key in order to move the robot. When the key is released the robot will stop. The hold-to-run function makes test of the program safer.

2.3 Operation

All operations and programming can be carried out using the portable teach pendant (see Figure 3) and the operator's panel (see Figure 5).

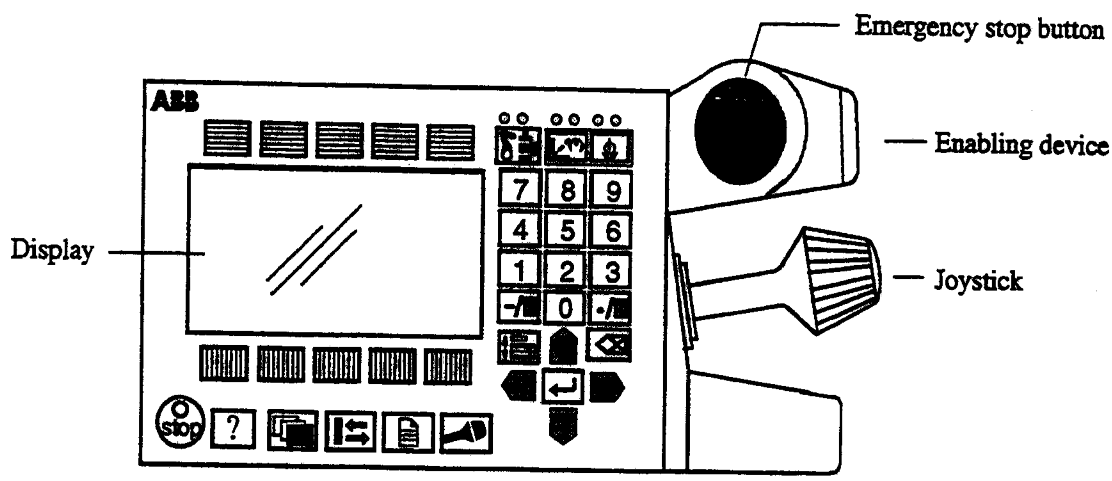

Figure 3 The teach pendant is equipped with a large display, which displays prompts, information, error messages and other information in plain English.

Information is presented on a large display using windows, pull-down menus, dialogs and function keys. No previous programming or computer experience is required to learn how to operate the robot. All operation can be carried out via the teach pendant, which means that a specific keyboard is not required. All information, including the complete programming language, is written in English or, if preferred, some other major language.

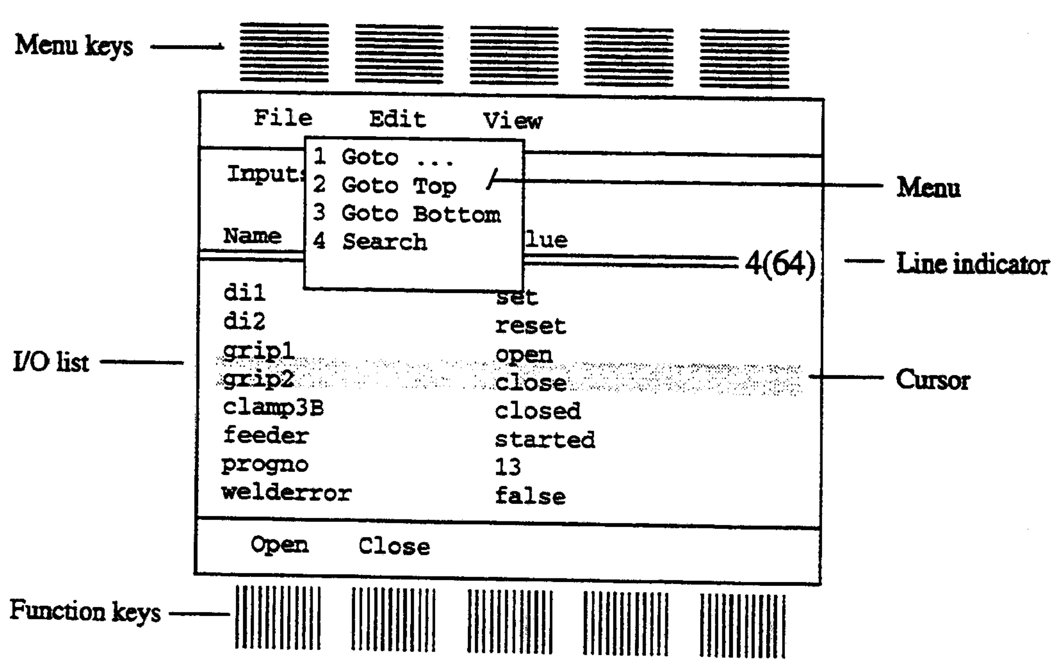

Figure 4 Window for manual operation of input and output signals.

Using the joystick, the robot can be manually jogged (moved). The user determines the speed of this movement; large deflections of the joystick will move the robot quickly, smaller deflections will move it more slowly.

The robot supports different user levels, with dedicated windows for:

- Production
- Programming
- Service and installation

Operator's panel

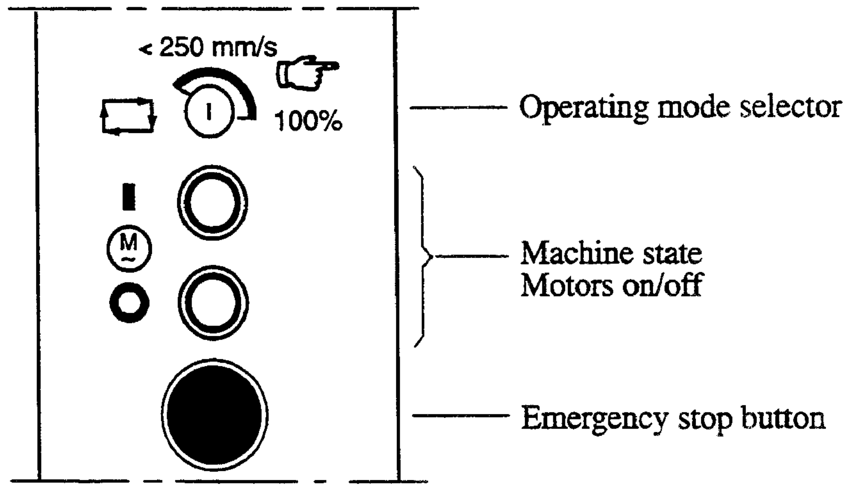

Figure 5 The operating mode is selected using the operator's panel on the controller.

Using a key switch, the robot can be locked in three different operating modes:

- Automatic mode: Running production
- Manual mode at reduced speed: Programming and setup. Max. speed: 250 mm/s (600 inches/sec.)
- Manual mode at full speed: Testing at full program speed

Both the operator's panel and the teach pendant can be mounted externally, i.e. outside the cabinet. The robot can then be controlled from there.

The robot can be remotely controlled from a computer, PLC or from a customer's panel using serial communication or digital system signals.

2.4 Installation

All the IRB 6400 robots are designed for floor mounting except one version for shelf-mounting. An end effector, weighing maximum 150 kg inclusive of payload, can be mounted on the mounting flange (axis 6).

Extra loads (valve packages, transformers) can be mounted on the upper arm as well as on the frame of axis 1.

The working range of axes 1-3 can be limited by mechanical stops. Position switches can be supplied on axis 1 for position indication.

The robot has a standard configuration and can be operated immediately. Its configuration is displayed in plain language and can easily be changed using the teach pendant.

The robot configuration can be stored on a diskette and/or transferred to other robots that have the same characteristics.

2.5 Programming

Programming the robot involves choosing instructions and arguments from lists of appropriate alternatives. Users do not have to remember the format of instructions, since they are prompted in plain English. "See and pick" is used instead of "remember and type".

The programming environment can easily be customized using the teach pendant.

- The language used on your shop floor can be used to give your own names to programs, signals, counters, etc.
- New instructions can easily be written.
- The most common instructions can be assembled in easy-to-use pick lists.
- Positions, registers, tool data or other data can be created, and new data will automatically be named.

Programs, parts of programs and any modifications can be tested immediately without having to translate the program.

The program is stored as a normal PC text file, which means that it can be edited using a standard PC.

Movements

A sequence of movements is programmed as a number of partial movements between the positions to which you want the robot to move.

The positions of a motion instruction are selected either by manually jogging the robot to the desired position with the joystick, or by referring to a position defined earlier.

The exact position can be defined (see Figure 6) as

- a stop point, i.e. the robot reaches the programmed position; or
- a fly-by point, i.e. the robot turns close to the programmed position. The size of the deviation is defined independently for the TCP and for the orientation of the tool and external axes.

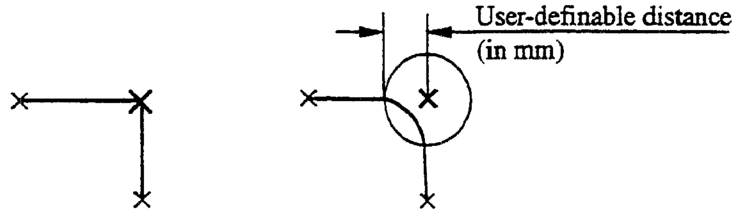

Figure 6 The fly-by point reduces the cycle time since the robot does not reach the programmed point.

The velocity may be specified in the following units:

- mm/s
- seconds (time it takes to reach the next programmed position)
- degrees/s (for reorientation of the tool or for a rotation of an external axis)

Program management

For convenience, the programs can be named and stored in different directories.

Areas of the robot's program memory can also be used for program storage. This gives a very fast memory where you can store several programs. The complete program or parts of programs can be transferred to/from a diskette.

Programs can be printed on a printer connected to the robot, or transferred to a PC where they can be edited or printed.

Editing programs

Programs can be edited using standard editing commands; i.e. "cut-and-paste", copy, delete, find and change, etc. Individual arguments in an instruction can also be edited using these commands.

No reprogramming is necessary when processing left-hand and right-hand parts, since the program can be mirrored in any plane.

A robot position can easily be changed either by

- jogging the robot with the joystick to a new position and then pressing the "ModPos" key (this registers the new position), or by
- entering or displacing numeric values.

Testing programs

Several helpful functions can be used when testing programs. For example, it is possible to

- start from any instruction;
- execute an incomplete program;
- run one cycle;
- execute forward/backward step-by-step;
- simulate wait conditions;
- temporarily reduce the speed;
- change a position;

2.6 Automatic Operation

A dedicated production window with commands and information required by the operator is automatically displayed during automatic operation.

The operation procedure can be customized to suit the robot installation

- by means of user-defined operating dialogs;
- by defining data to be displayed.

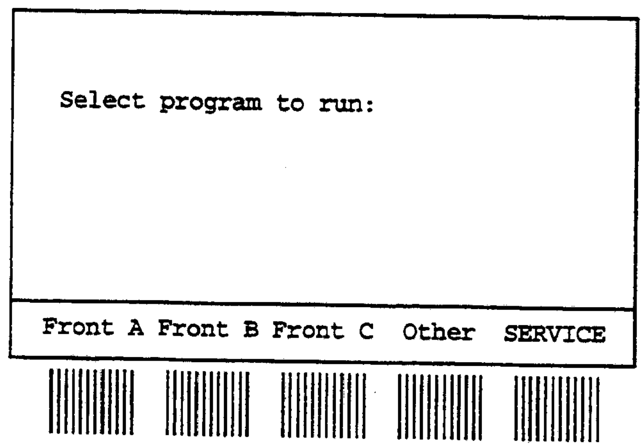

Figure 7 The operator dialogs can easily be customized.

A special input can be set to order the robot to go to a service position. After service, the robot is ordered to return to the programmed path and continue program execution.

You can also create special routines that will be automatically executed when the power is switched on, on restarts and on other occasions. This allows you to customize each installation and to make sure that the robot is started up in a controlled way.

The robot is equipped with absolute measurement, making it possible to operate the robot directly from when the power is switched on. For your convenience, the robot saves the used path, program data and configuration parameters so that the program can easily be restarted from where you left off.

Production statistics can be generated:

- Data (e.g. number of parts produced) can be written to a file and processed in a PC at a later stage.

- Status changes and reasons for downtime are logged automatically.

Thanks to the robot's efficiency in handling error situations, most faults can be detected and dealt with automatically without having to call the operator.

2.7 Maintenance and Troubleshooting

The robot requires only a minimum of maintenance during operation. It has been designed to make it as easy to service as possible:

- The controller is enclosed, which means that the electronic circuitry is protected when operating in a normal workshop environment.
- Maintenance-free AC motors are used.
- Liquid grease is used for the main gear boxes.
- The cabling is routed for longevity, and in the unlikely event that it fails, its modular design makes it easy to change.
- It has a program memory "battery low" alarm.

The robot has several functions to provide efficient diagnostics and error reports:

- It performs a self test on start up.
- Errors are indicated by an error message displayed in plain language. The message includes the reason for the fault and suggests recovery action.
- A board error is indicated by an LED on the faulty unit.
- Faults and major events are logged and timestamped. This makes it possible to detect error chains and provides the background for any downtime. The log can be read on the display of the teach pendant, stored in a file and also printed on a printer.
- There are commands and service programs in RAPID to test units and functions.
- The robot signals are assembled in the form of 128 measuring points.
- The Product Manual includes a troubleshooting guide with step-by-step instructions.

Most errors detected by the user program can also be reported to and handled by the standard error system. Error messages and recovery procedures are displayed in plain language. These messages can easily be changed and information can be added to suit a specific robot installation.

2.8 Robot Motion

Floor-mounted

Measures apply to
IRB 6400/ 3.0-75

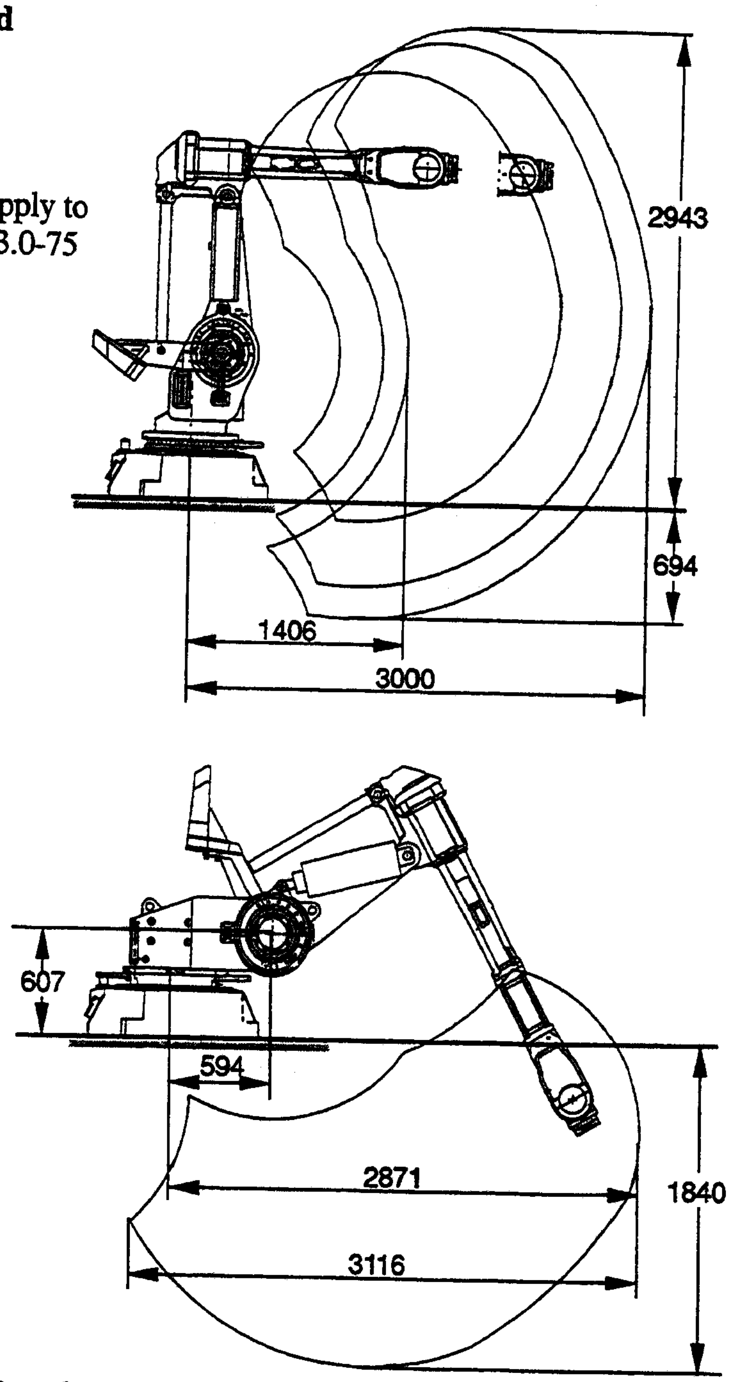

Shelf-mounted

Figure 8 Working space of the IRB 6400.

Motion performance

The QuickMove™ concept means that a self-optimizing motion control is used. The robot automatically optimizes the servo parameters to achieve best possible performance throughout the cycle - based on load properties, location in working area, velocity and direction of movement.

- No parameters have to be adjusted to achieve correct path, orientation and velocity.
- Maximum acceleration is always obtained (acceleration can be reduced, e.g. when handling fragile parts).
- The number of adjustments that have to be made to achieve the shortest possible cycle time are minimized.

The TrueMove™ concept means that the programmed path is followed – regardless of the speed or operating mode – even after an emergency stop, a safeguarded stop, a process stop or a program stop.

The robot can, in a controlled way, pass through singular points, i.e. points where two axes coincide.

Coordinate systems

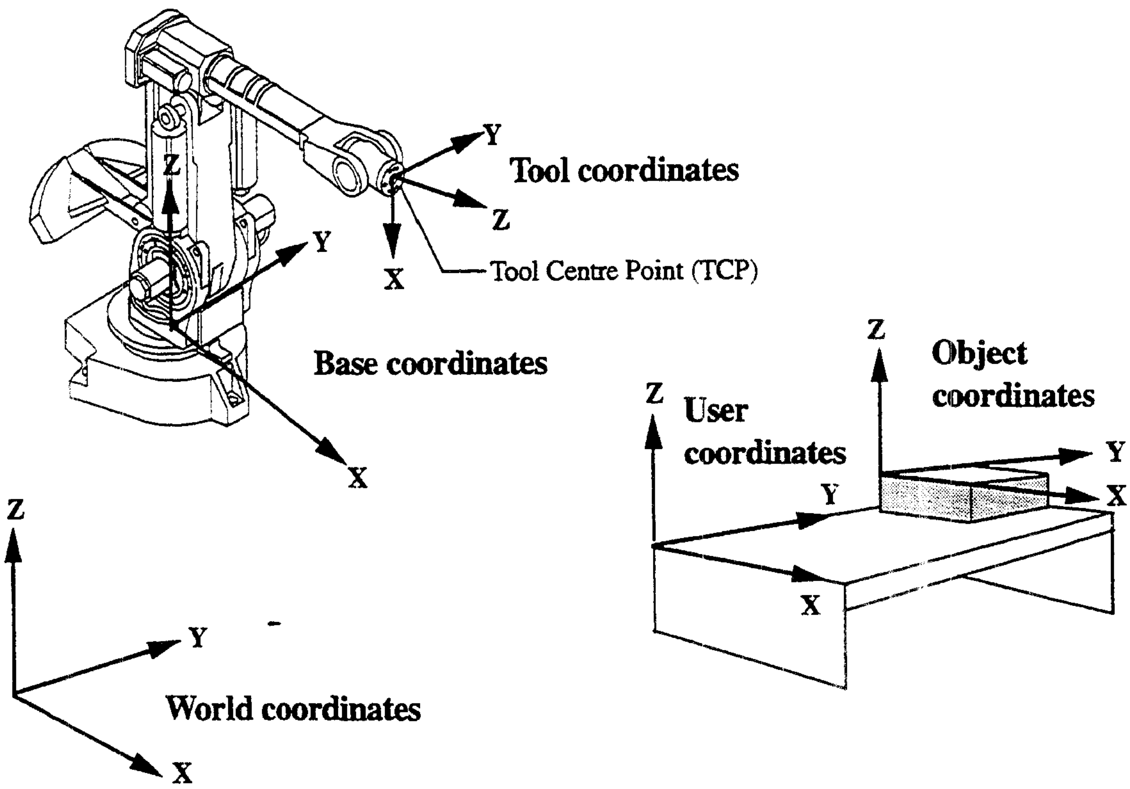

Figure 9 The coordinate systems, used to make jogging and off-line programming easier.

The world coordinate system defines a reference to the floor, which is the starting point for the other coordinate systems. Using this coordinate system, it is possible to relate the robot position to a fixed point in the workshop. The world coordinate system is also very useful when two robots work together or when using a robot carrier.

The base coordinate system is referenced to the base mounting surface of the robot.

The tool coordinate system specifies the tool's centre point and orientation.

The user coordinate system specifies the position of a fixture or workpiece manipulator.

The object coordinate system specifies how a workpiece is positioned in a fixture or workpiece manipulator.

The coordinate systems can be programmed by specifying numeric values or jogging the robot through a number of positions (the tool does not have to be removed).

Each position is specified in object coordinates with respect to the tool's position and orientation. This means that even if a tool is changed because it is damaged, the old program can still be used, unchanged, by making a new definition of the tool.
If a fixture or workpiece is moved, only the user or object coordinate system have to be redefined.

Stationary TCP

When the robot is holding a work object and working on a stationary tool, it is possible to define a TCP for that tool. When that tool is active, the programmed path and speed are related to the work object.

Program execution

The robot can move in any of the following ways:

- Joint motion (all axes move individually and reach the programmed position at the same time)
- Linear motion (the TCP moves in a linear path)
- Circle motion (the TCP moves in a circular path)

If the location of a workpiece varies from time to time, the robot can find its position by means of a digital sensor. The robot program can then be modified in order to adjust the motion to the location of the part.

Jogging

The robot can be manually operated in one of the following ways:

- Axis-by-axis, i.e. one axis at a time
- Linearly, i.e. the TCP moves in a linear path (relative to one of the coordinate systems mentioned above)
- Reoriented around the TCP

It is possible to select the step size for incremental jogging. Incremental jogging can be used to position the robot exactly, since the robot moves a short distance each time the joystick is moved.

During manual operation, the current position of the robot and the external axes can be displayed on the teach pendant.

2.9 External Axes

The robot can control up to six external axes. These axes are programmed and moved using the teach pendant in the same way as the robot's axes.

The external axes can be grouped into mechanical units to facilitate, for example, the handling of robot carriers, workpiece manipulators, etc.

The robot motion can be simultaneously coordinated with a one-axis linear robot carrier and

- a linear or a rotational external axis.

By specifying a kinematic model (its dimensions and gear ratio) of a unit, movements can be coordinated with the robot motion and also for a two axes manipulator.

A mechanical unit can be activated or deactivated to make it safe when, for example, manually changing a workpiece located on the unit. In order to reduce investment costs, any axes that do not have to be active at the same time can use the same drive unit.

Programs can be reused in other mechanical units of the same type.

2.10 Inputs and Outputs

A number of digital and analog inputs and outputs can be installed:

- Digital signals: up to 96 inputs/96 outputs
- Analog signals: 4 inputs/4 outputs
- Remote I/O for Allen Bradley PLC: 128 inputs/128 outputs

The inputs and outputs can be configured to suit your installation:

- Each signal and board can be given a name, e.g. gripper, feeder
- I/O mapping (i.e. a physical connection for each signal)
- Polarity (active high or low)
- Cross connections
- Up to 16 digital signals can be grouped together and used as if they were a single signal when, for example, entering a bar code

Signals can be assigned to special system functions, such as program start, so as to be able to control the robot from an external panel or PLC.

The robot can work as a PLC by monitoring and controlling I/O signals:

- Outputs can be set a specific time or distance before a programmed position.
- I/O instructions can be executed concurrent to the robot motion.
- Inputs can be connected to trap routines. (When such an input is set, the trap routine starts executing. Following this, normal program execution resumes. In most cases, this will not have any visible effect on the robot motion, i.e. if a limited number of instructions are executed in the trap routine.)

Manual functions are available to:

- List all the signal values
- Create your own list of your most important signals
- Manually change the status of an output signal
- Print signal information on a printer

Signal connections consist of either connectors or screw terminals, which are located in the controller. I/O signals can also be routed to connectors on the upper arm of the robot.

2.11 Serial Communication

The robot can communicate with other devices using serial channels.

The connections to the devices can be used, for example, to:

- Display production information
- Print production statistics
- Write or read digital and analog I/O to and from PLCs or other computers
- Program reading or writing of binary- or character-based information
- Control the robot from a computer, e.g. to start and stop program execution and to transfer programs
- Monitor the robot from a computer, e.g. to read the status and other data

2.12 SpotWare

SpotWare is an add-on software package that comprises dedicated spot welding functions. Thanks to customized functions for communication and monitoring (weld timers, guns and weld transformers) together with general functions for I/O management, error handling, diagnostics, status reports, etc. is an efficient system for spot welding obtained.

The program can be accessed throughout production by means of general tools that can easily adapt the robot to a specific installation. Examples of possible customizations are simple operator dialogs in plain language, monitoring of peripherals with automatic error handling, user-defined error messages in plain language, and logs of important events.

Cycle times can be shortened by means of the robot's self-optimized motion control, which results in fast acceleration and a quick approach to the spot weld. Closing the spot welding gun in advance, together with the fact that movement can commence immediately after a spot weld is completed, also contributes to making cycle times shorter.

SpotWare is a simple yet powerful program since both the positioning of the robot and the process control and monitoring are handled in one and the same instruction.

The robot can communicate with weld timers via parallel inputs/outputs as well as with serial interfaces for weld timers such as Nadex.

I/O signals can be easily configured to meet the requirements of a specific installation. Timing sequences and weld error actions can easily be customized. Furthermore, the system can handle double guns, different strokes, stepper counters, etc.

2.13 ArcWare

ArcWare comprises a large number of dedicated arc welding functions, which make the robot well suited for arc welding. ArcWare is a very powerful and flexible tool and can easily be adapted to specific processing equipment, and to different types of processes.

It is just as simple to operate and program as the basic system, which means that little training is required. The information presented to the user is adapted to the function being used at the time which makes operation easier. ArcWare can also be customized for a particular installation.

High productivity and welding quality are supported by basic general functions, such as high acceleration and user-defined zones for reorientation. Mechanical units, such as workpiece manipulators and robot carriers, can be controlled, coordinated with the robot motion. Up to six external axes can be handled as one mechanical unit. Two mechanical units can share the same drive system. Each mechanical unit can be activated or deactivated as a group.

In addition to the above, ArcWare includes the following functions specific to arc welding:

- Advanced process control
- A wide variety of process-monitoring methods
- User-defined weld retry, including “go-to-service” routine
- Simple manipulation of weld data
- Fine-adjustment of welding parameters during program execution
- Logging of process errors and events
- Weaving
- Seam tracking using weld guide

3 Technical specification

Applies to standard and Foundry versions unless otherwise stated.

3.1 Structure

Weight:	Manipulator	IRB 6400PE /2.25-75	1590 kg
		IRB 6400 /2.4-120	1870 kg
		IRB 6400 /2.4-150, /2.8-120, /3.0-75	2010 kg
		IRB 6400S /2.9-120	2240 kg
	Controller		300 kg
Volume:	Controller		1700 x 915 x 530 mm

Airborne noise level:

The sound pressure level outside the working space	< 70 dB (A) Leq (acc. to Machinery directive 89/392 EEC

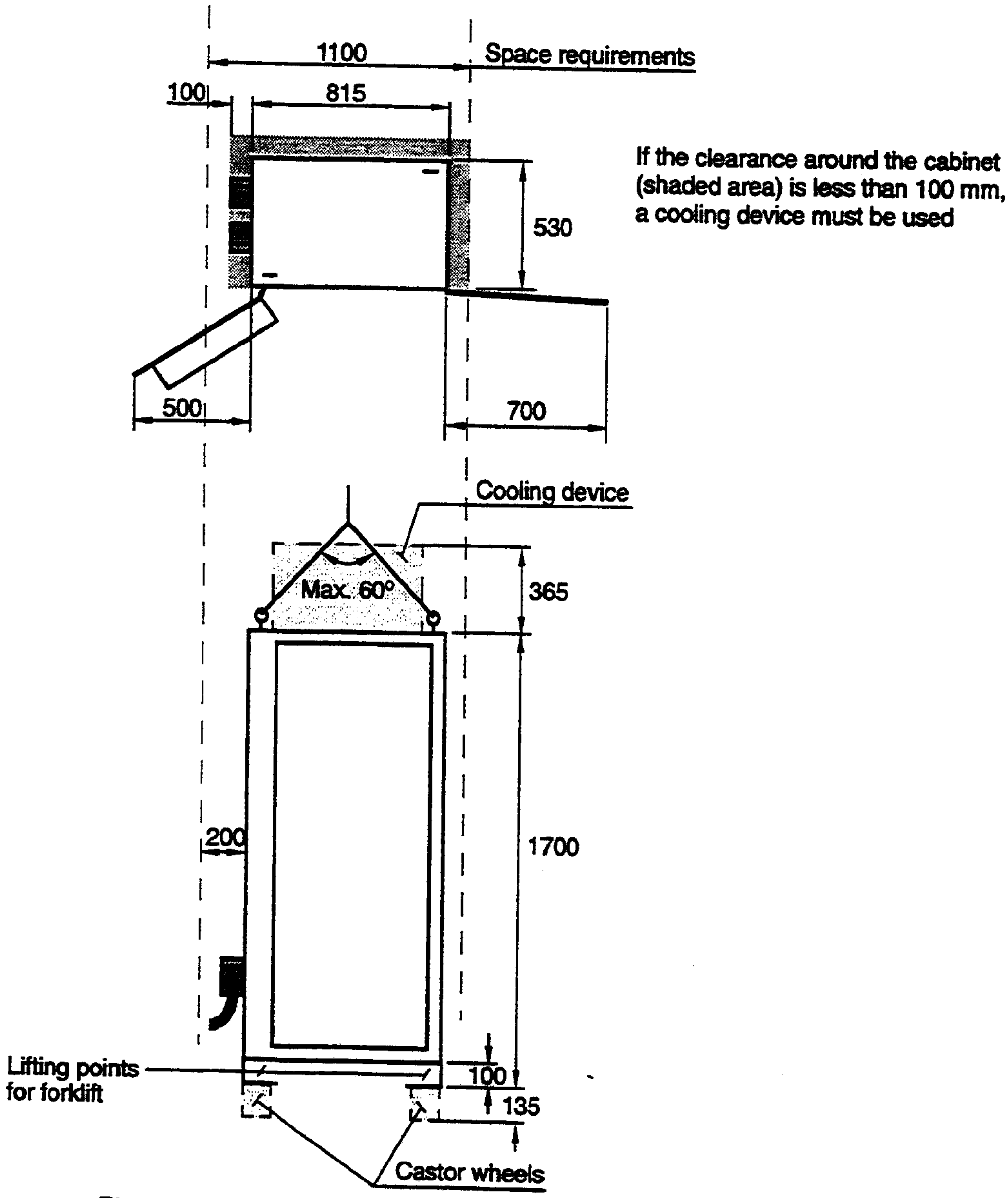

Figure 10 View of the controller from the front and from above (measures in mm).

IRB 6400 /2.4-120, IRB 6400 /2.4-150, IRB 6400 /2.8-120, IRB 6400 /3.0-75

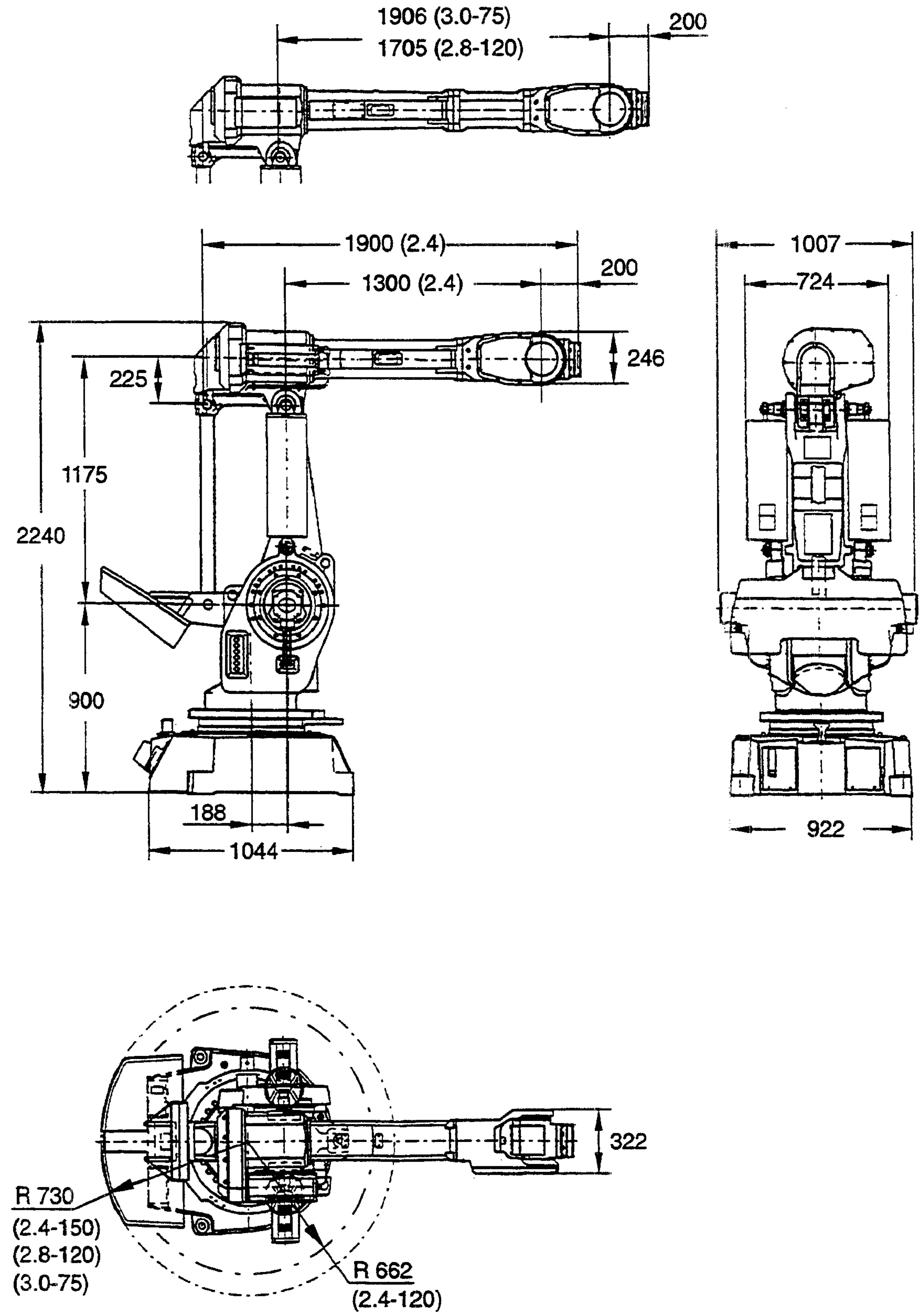

Figure 11 View of the manipulator from the side, rear and above (measures in mm).

IRB 6400PE /2.25-75

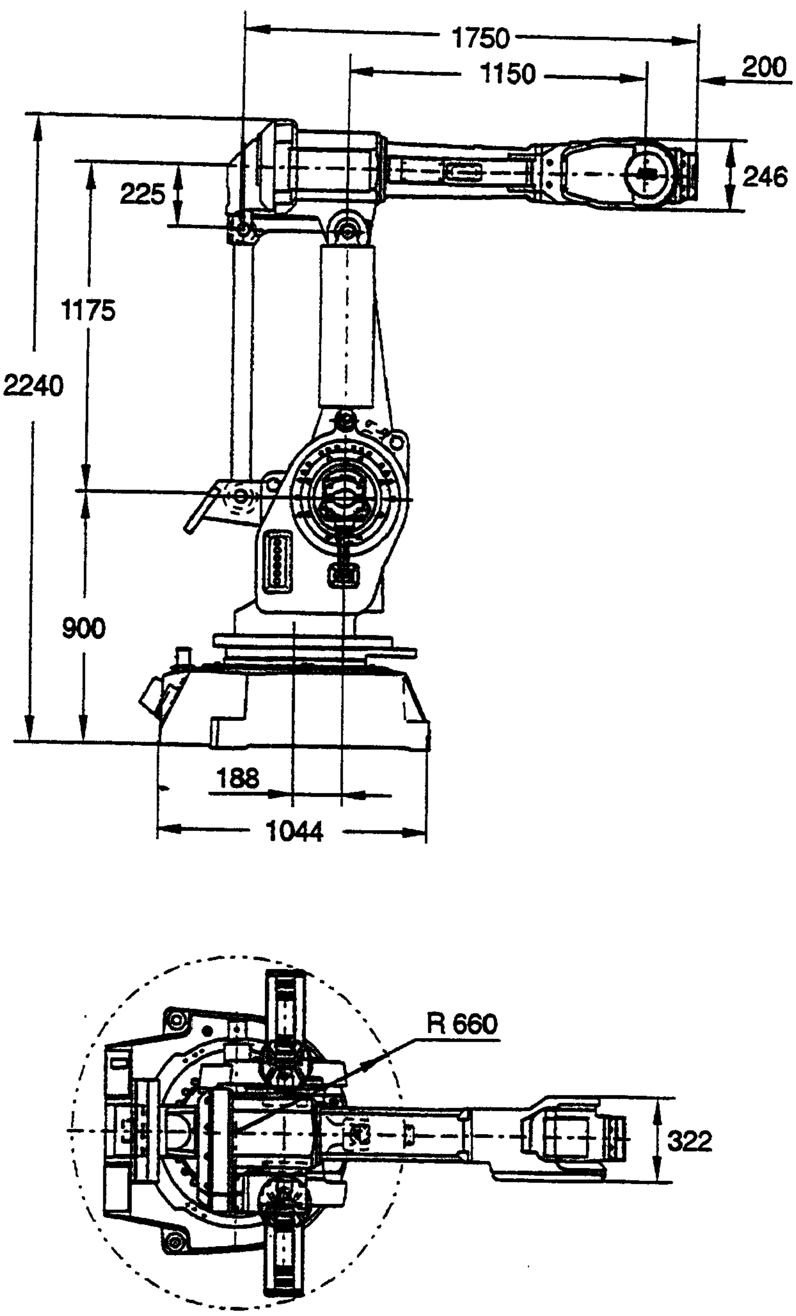

Figure 12 View of the manipulator from the side, rear and above (measures in mm).

IRB 6400S /2.9-120

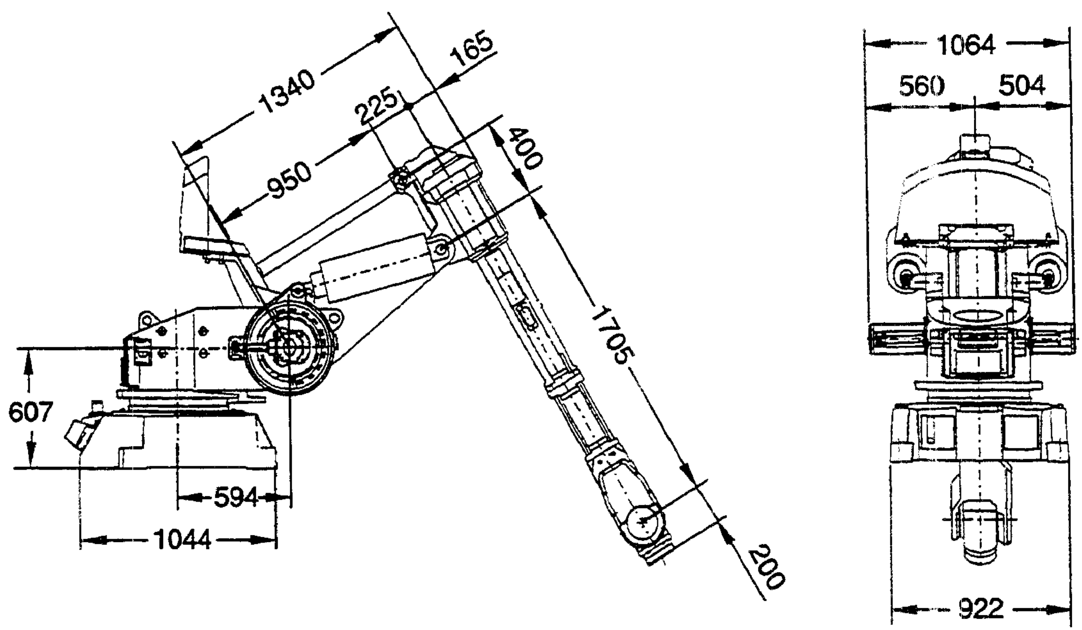

Figure 13 View of the manipulator from the side and rear (measures in mm).
The robot is shown in its synch. position.

3.2 Safety/Standards

The robot conforms to the following standards:

EN 292-1	Safety of machinery, terminology
EN 292-2	Safety of machinery, technical specifications
EN 60204	Electrical equipment of industrial machines
IEC 204-1	Electrical equipment of industrial machines
ISO 10218, EN 775	Manipulating industrial robots, safety
ANSI/RIA 15.06/1992	Industrial robots, safety requirements
ISO 9409-1	Manipulating industrial robots, mechanical interfaces
ISO 9787	Manipulating industrial robots, coordinate systems and motions
IEC 529	Degrees of protection provided by enclosures
prEN 50081-2	EMC, Generic emission
prEN 50082-2	EMC, Generic immunity

Safeguarded space stops via inputs

External safety equipment can be connected to the robot's emergency stop chain (the emergency stop chain is double) in several different ways (see Figure 14).

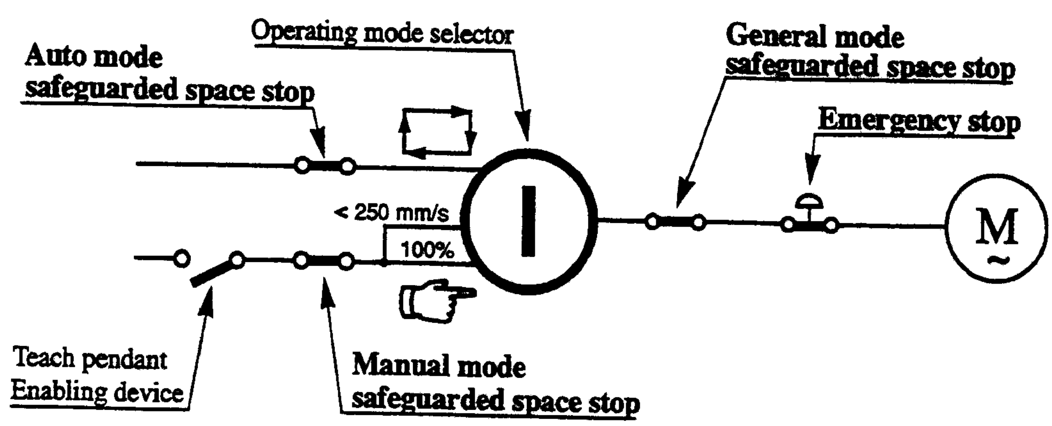

Figure 14 All safeguarded space stops force the robot's motors to the MOTORS OFF state. A delay can be connected to any safeguarded space stop.

3.3 Operation

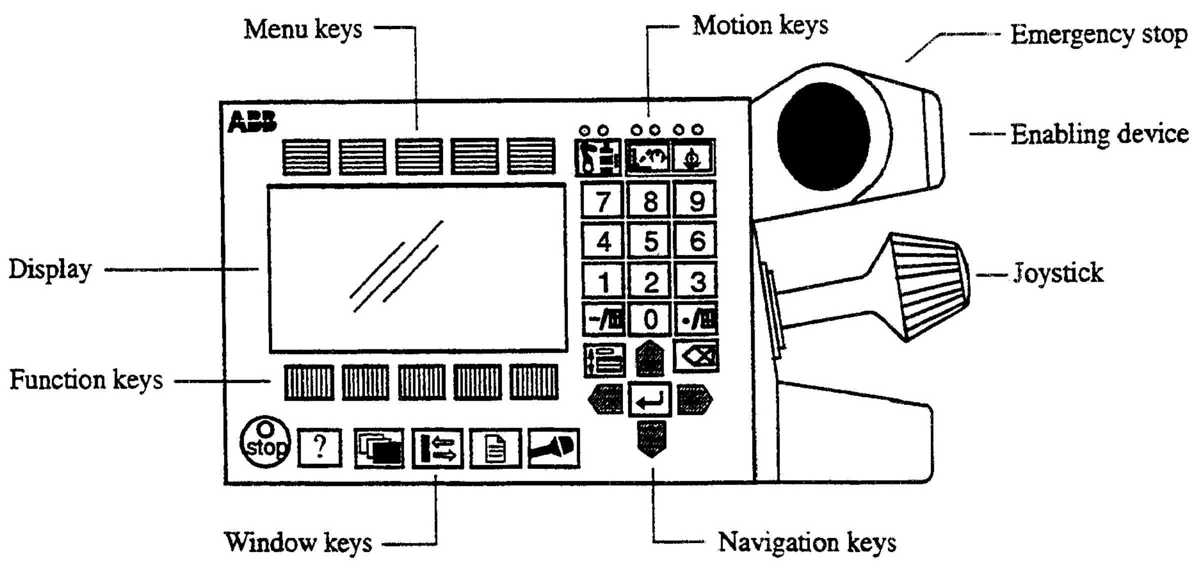

Figure 15 The teach pendant is very easy to use since any functions provided via the function and menu keys are described in plain language. The remaining keys can perform only one function each.

Display
16 text lines with 40 characters per line. Backlit LCD.

Motion keys
Select the type of movement for robot or external axis when jogging: linear movement, reorientation or axis-by-axis movement.

Navigation keys
Move the cursor and enter data.

Menu keys
Display pull-down menus.

Function keys
Select the commands used most often.

Window keys
Display one of the robot's various windows. These windows control a number of different functions:

- Jogging (manual operation)
- Programming, editing and testing a program
- Manual input/output management
- File management
- System configuration
- Service and troubleshooting
- Automatic operation

3.4 Installation

Operating requirements

Protection standards IEC529

Normal	Manipulator	IP54
	Wrist	IP55
	Controller	IP54
IRB 6400F	Manipulator	IP55
	Wrist	IP67
	Controller	IP54

Explosive environments
The robot must neither be placed nor operated in an explosive environments.

Ambient temperature

Manipulator during operation	+5°C (41°F) - +50°C (122°F)
Controller during operation	+5°C (41°F) - +40°C (104°F)
(with cooling device)	+5°C (41°F) - +52°C (125°F)
Complete robot during transportation and storage	-25°C (13°F) - +55°C (131°F)

Relative humidity

Complete robot during transportation and storage	Max. 95% at constant temperature
Complete robot during operation	Max. 95% at constant temperature

Power supply

Mains voltage	200-600V, three-phase, +10%,-15%
Mains frequency	48.5 – 61.8 Hz
Rated power	6.7 kVA (transformer size)

Configuration

The robot is very flexible and can, by using the teach pendant, easily be configured to suit the needs of each user:

Authorization	Password protection for configuration window
Most common I/O	User-defined lists of I/O signals
Instruction pick list	User-defined set of instructions
Instruction builder	User-defined instructions
Default data	Default data used when programming
Operator dialogs	Customized operator dialogs
Language	All text on the teach pendant can be displayed in several languages
Date and time	Calendar support
Power on sequence	Action taken when the power is switched on
EM stop sequence	Action automatically taken at an emergency stop
Main start sequence	Action automatically taken when the program is starting from the beginning
Program start sequence	Action automatically taken at program start
Program stop sequence	Action automatically taken at program stop

Program stop sequence	Action automatically taken at program stop
Change program sequence	Action taken when a new program is loaded
Working space	Working space limitation
External axes	Number, type, common drive unit, mechanical units
Hold to run	Hold-to-run safety function activated/not activated
Brake delay time	Time before brakes are engaged
I/O signal	Logical names of boards and signals, I/O mapping, cross connections, polarity, scaling,interrupts, group I/O, emergency stop status
Serial communication	Configuration

Mounting of the manipulator

Max. load in relation to the base coordinate system in the event of an emergency Force xy ± 18200 N

Force z 19000 ± 10000 N

Torque xy ± 39200 Nm

Torque z 12500 Nm

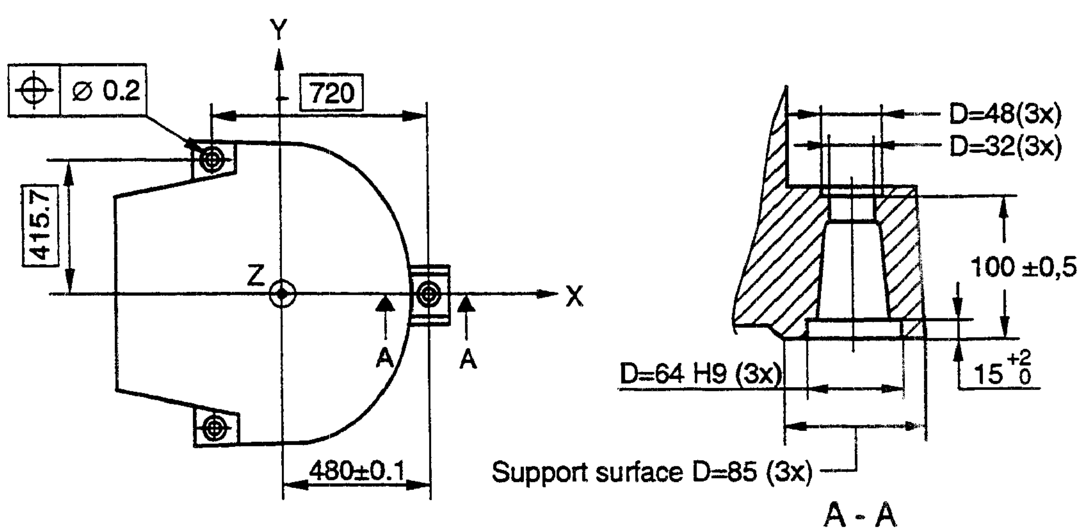

Figure 16 Hole configuration (measures in mm).

Load diagramsLoad diagrams

Load diagram for IRB 6400 /2.4-120, IRB 6400 /2.8-120, IRB 6400S /2.9-120 and IRB 6400 /3.0-75, IRB 6400PE /2.25-75 (the curves for 120 and 100 kg are not valid for the versions /3.0-75 and PE /2.25-75, max. handling capacity limited to 75 kg).

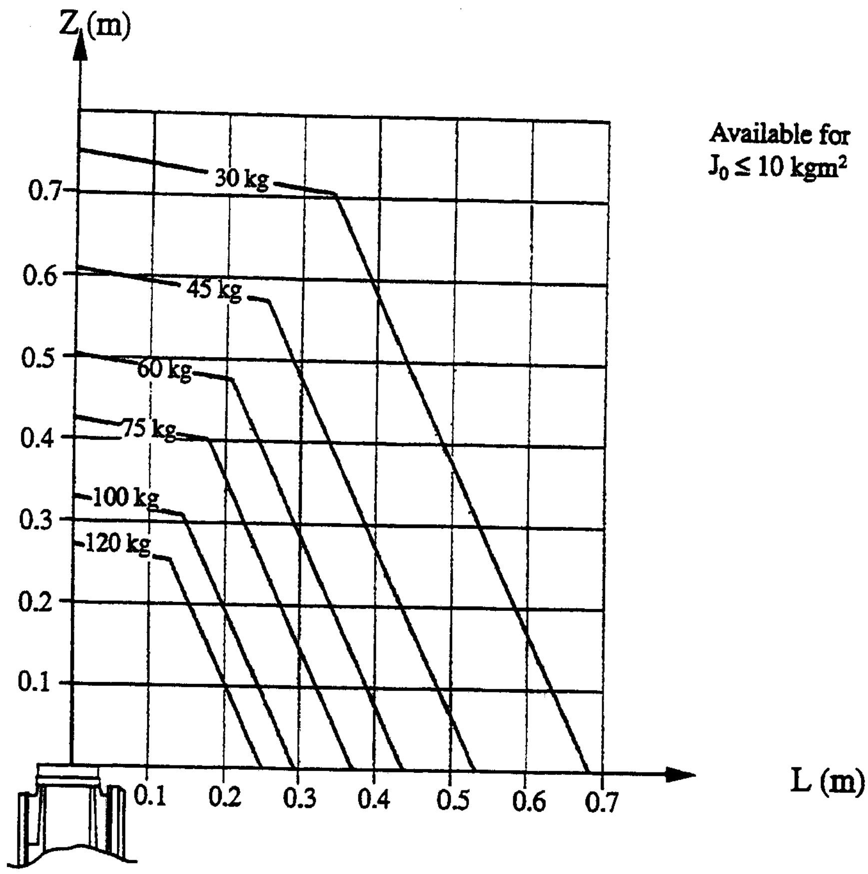

Load diagram for $15 > J_0 > 10$ kgm^2

$$m \bullet Z_A^2 + 5.6 \bullet m \bullet Z_A + 288 \bullet Z_A + m + 7.44 \bullet J_0 = 464.4$$

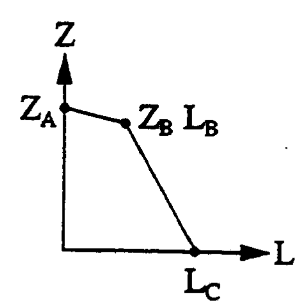

$$L_B = ((9.06\text{-}0.24 \bullet J_0) / m)^{0.71}$$

$$Z_B = Z_A - 0.142 \bullet L_B$$

$$L_C = L_B + 0.484 \bullet Z_B$$

J_0 = own moment of inertia, of the total handling weight (kgm^2)
m = total handling weight (kg)
Z = see the above diagram and the coordinate system in Figure 9
L = distance in X-Y plane from Z-axis to the centre of gravity

Figure 17 Maximum weight permitted for load mounted on the mounting flange at different positions (centre of gravity).

Load diagram for IRB 6400 /2.4-150

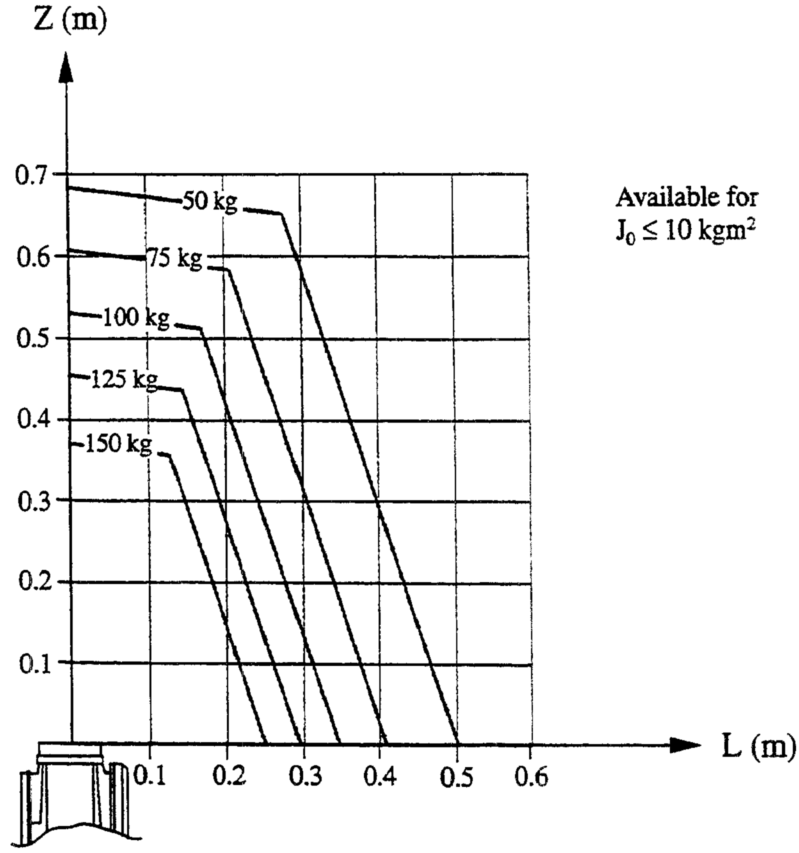

Load diagram for $15 > J_0 > 10$ kgm^2

$m \cdot Z_A^2 - 0.89 \cdot m \cdot Z_A + 250 \cdot Z_A + m + 0.62 \cdot J_0 = 220$

$L_B = ((11.5 - 0.32 \cdot J_0) / m)^{0.71}$

$Z_B = Z_A - 0.118 \cdot L_B$

$L_C = L_B + 0.346 \cdot Z_B$

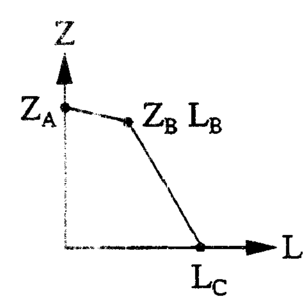

J_0 = own moment of inertia, of the total handling weight (kgm^2)
m = total handling weight (kg)
Z = see the above diagram and the coordinate system in Figure 9
L = distance in X-Y plane from Z-axis to the centre of gravity

Figure 18 Maximum weight permitted for load mounted on the mounting flange at different positions (centre of gravity).

Handling capacity for IRB 6400 /2.8-120 in presstending application

Note Option 51, PT adaption for IRB 6400/2.8-120 must be installed.

The weight and dimension of the part and gripper are limited by the maximum static torque and moment of inertia.

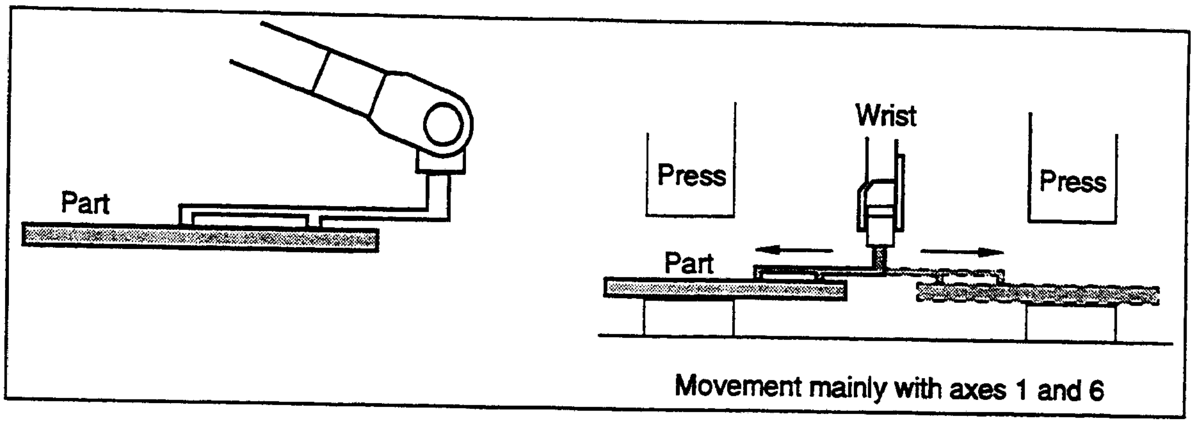

Figure 19 A-movement (inward movement).

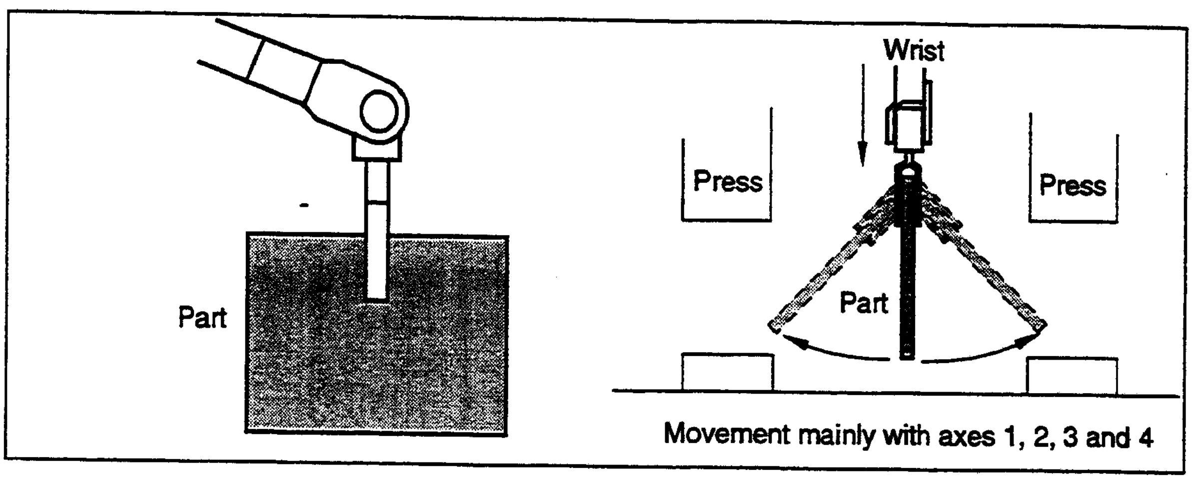

Figure 20 B-movement.

Static torque:	A-movement	Axis 5 $Ma_5 < 650$ Nm
	B-movement	Axis 4 $Mb_4 < 650$ Nm
Moment of inertia:	A-movement	Axis 5, $Ja_5 < 105$ kgm^2
		Axis 6, $Ja_6 < 120$ kgm^2
	B-movement	Axis 4, $Jb_4 < 105$ kgm^2
		Axis 5, $Jb_5 < 120$ kgm^2

An approximation of M and J can be calculated according to the following formula:

$Ma_5 = 9.81 \bullet (m_g \bullet r + m_p \bullet s)$ (Nm)

$Mb_4 = 9.81 \bullet (m_g \bullet (r + 0.2) + m_p \bullet (s + 0.2))$ (Nm)

$Ja_5 = m_g / 12 \bullet c^2 + m_g \bullet r^2 + m_p / 12 \bullet a^2 + m_p \bullet s^2$ (kgm^2)

$Ja_6 = m_g / 12 \bullet c^2 + m_g \bullet r^2 + m_p / 12 \bullet (a^2 + b^2) + m_p \bullet s^2$ (kgm^2)

$Jb_4 = m_g / 12 \bullet c^2 + m_g \bullet (r + 0.2)^2 + m_p / 12 \bullet a^2 + m_p \bullet (s + 0.2)^2$ (kgm^2)

$Jb_5 = m_g / 12 \bullet c^2 + m_g \bullet (r + 0.2)^2 + m_p / 12 \bullet (a^2 + b^2) + m_p \bullet (s + 0.2)^2$ (kgm^2)

m_g = weight of gripper (kg) m_p = weight of part (kg)

Distance a, b, c, r and s (m) are shown in Figure 21.

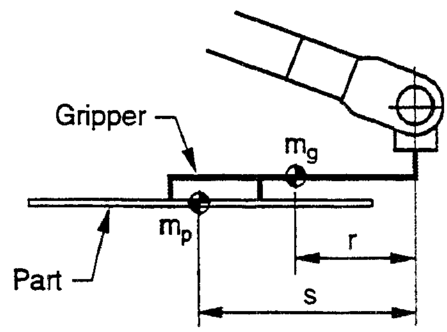

A-movement, gripper perpendicular to axis 6

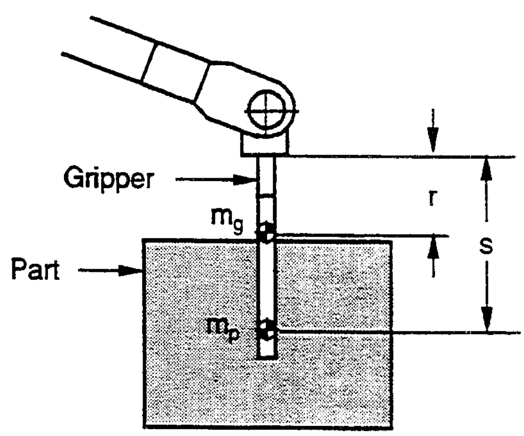

B-movement, gripper parallel to axis 6

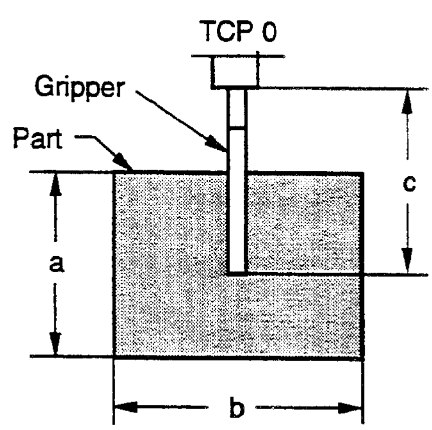

Dimensions of gripper and part

Figure 21 Distance a, b, r and s (m):

Process forces for IRB 6400PE /2.25-75

Max. force through the wrist centre:

- 0-65° relative to the vertical line, F = 5000 N
- 65-90° relative to the vertical line, F = 4500 N
- 90-115° relative to the vertical line, F = 3500 N

Max. offset force from the wrist centre:

- 3500 N when r = 100 mm.

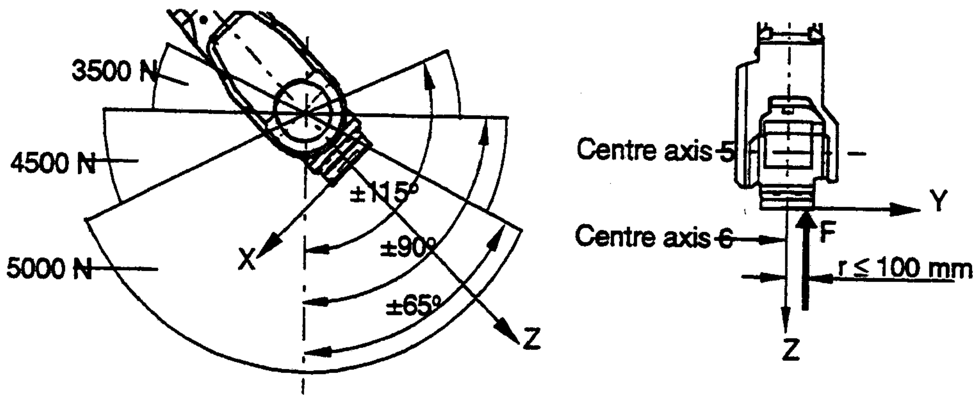

Figure 22 Max. force through the wrist centre.

The direction of force F must be parallel to the z-axis in the tool coordinate system (see Figure 9).

Time at max. force:

- < 1 second exclusive rewelds
- < 3 seconds for rewelds

Due to the dynamic forces and the backward elastic deflection in the robot, the rise time for rebuilding the forces in the air cylinder must comply with the values below:

- Min. time to achieve 90% of max force:	F > 3500 N	> 0.15 sec.
	F ≤ 3500 N	> 0.03 sec.
- Min. time to go from 100% load to 0% load:	F > 3500 N	> 0.1 sec.
	F ≤ 3500 N	> 0.03 sec.

The angular fault from z-axis must be less than 5°.
The distance between the weld cylinder and weld plate: 15 mm.

The number of poke points permitted per minute:
The force contact surface = 1 sec. (Cabinet temperature 45° C).
The number of points can be increased if the cabinet temperature can be decreased.

Axis	% Torque[1]	Number of points/minute[2]
1	100	3-5
	75	6-8
	50	15-20
2 and 3	100	12-25
	75	- 26-40

[1] 100% = maximum torque load on current axis
[2] The lower value applies when the current robot axis carries out large movements.
The higher value applies to small movements of the current axis.

Mounting of equipment

Extra loads can be mounted on the upper arm and the frame. Definitions of distances and masses are shown in Figure 23 (upper arm) and in Figure 24 (frame).

The robot is supplied with holes for mounting extra equipment (see Figure 26).

Upper arm

IRB 6400 /2.4-120, /2.4-150, /2.8-120, IEB 6400PE /2.25-75, IRB 6400S /2.9-120

Permitted extra load on upper arm plus the maximum handling weight:
M1 ≤ 35 kg with distance a ≤ 500 mm, centre of gravity in axis 3 extension
or
M2 ≤ 35 kg with distance b ≤ 400 mm
or
M3 ≤ 10 kg with distance c ≥300 mm
If the handling weight is lower than the maximum weight, M1 alt. M2 can be increased as follows:
M1 (alt. M2) + handling weight ≤ 35 kg + max. handling weight

For example, if the handling weight for 2.4-120 is only 80 kg, M2 can equal 75 kg.

IRB 6400 /3.0-75

Permitted extra load on upper arm:
M1 ≤ 35 kg with distance a ≤ 500 mm, centre of gravity in axis 3 extension
or
M2 ≤ 20 kg with distance b ≤ 400 mm
or
M3 ≤ 5 kg with distance c ≥300 mm

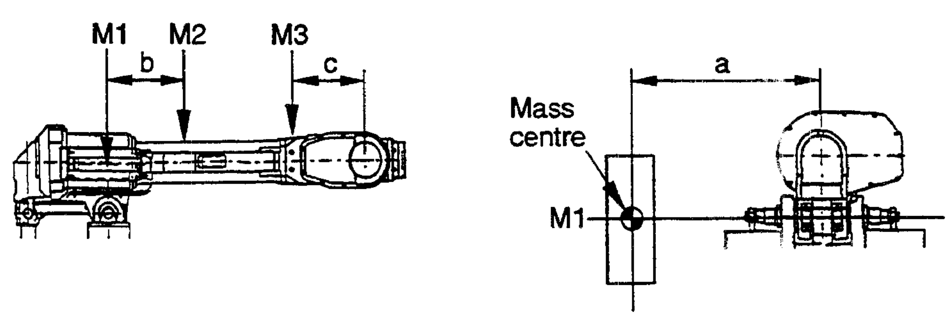

Figure 23 Permitted extra load on upper arm.

Frame (Hip Load)

Permitted extra load on frame is $J_H = 120$ kgm^2.
Recommended position (see Figure 24 and Figure 25).
$J_H = J_{H0} + M4 \bullet R^2$

where J_{H0} is the moment of inertia of the equipment
R is the radius (m) from the centre of axis 1
$M4$ is the total mass (kg) of the equipment including bracket and harness (≤ 320 kg)

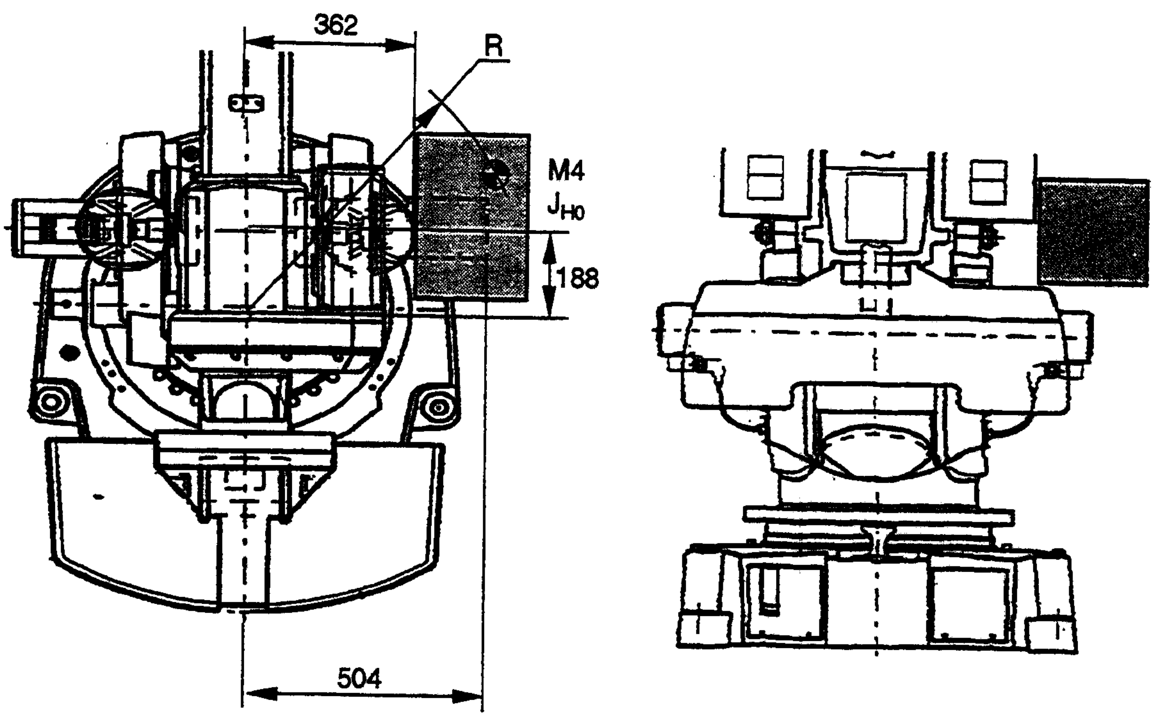

Figure 24 Extra load on frame of IRB 6400 /2.4-120, /2.4-150, /2.8-120, /3.0-75 and IRB 6400PE /2.25-75. (Measures in mm).

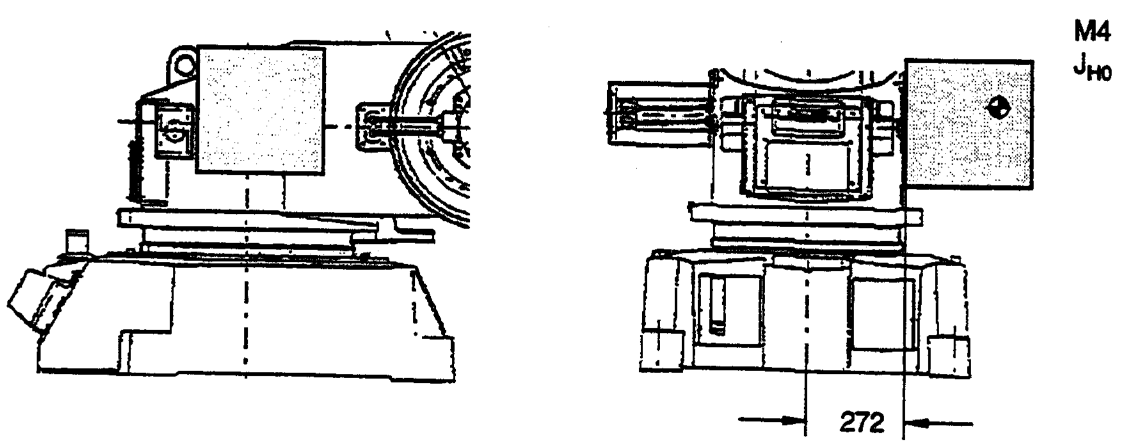

Figure 25 Extra load on frame of IRB 6400S /2.9-120. (Measures in mm).

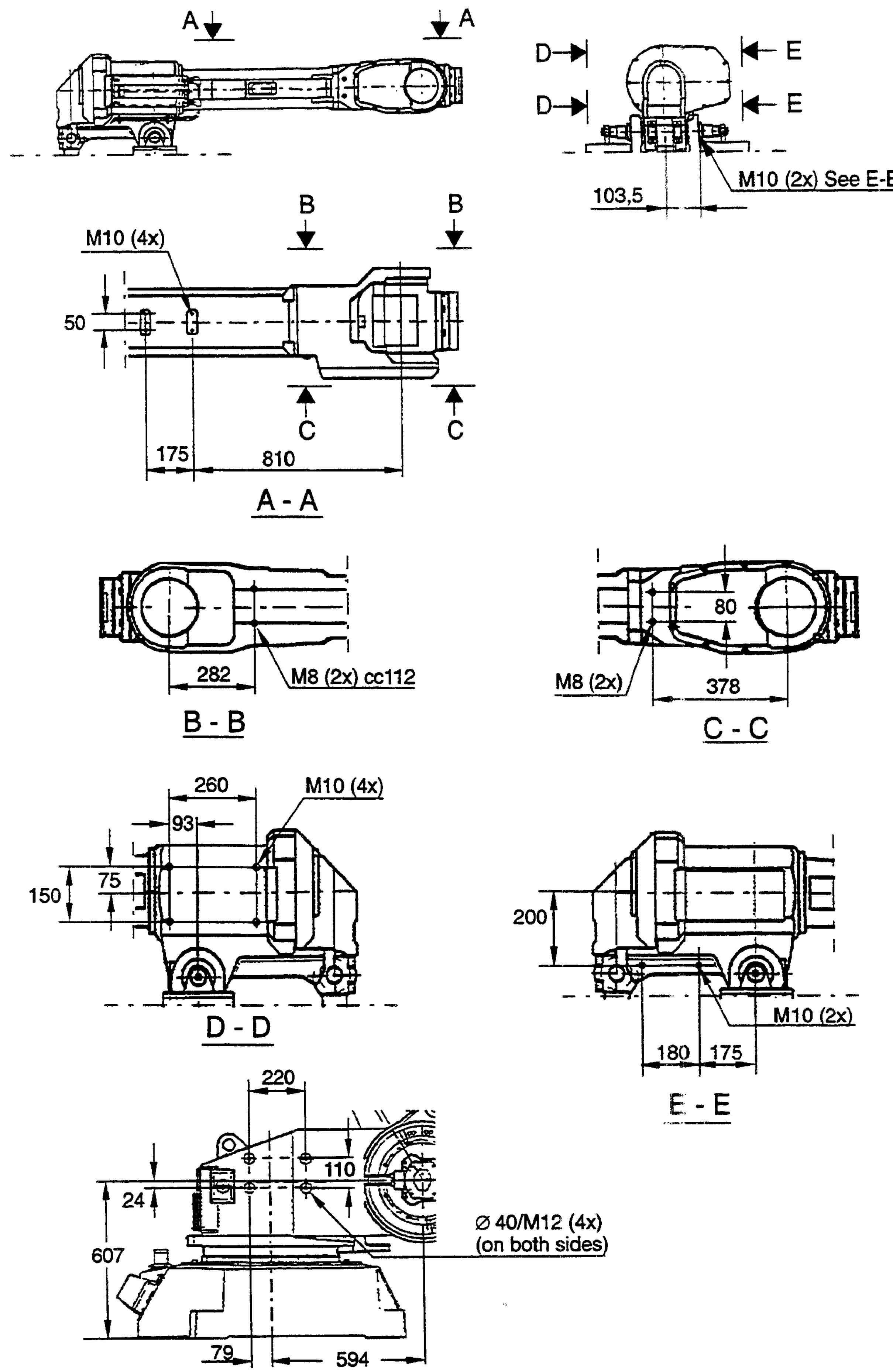

Figure 26 Holes for mounting of extra equipment (Measures in mm).

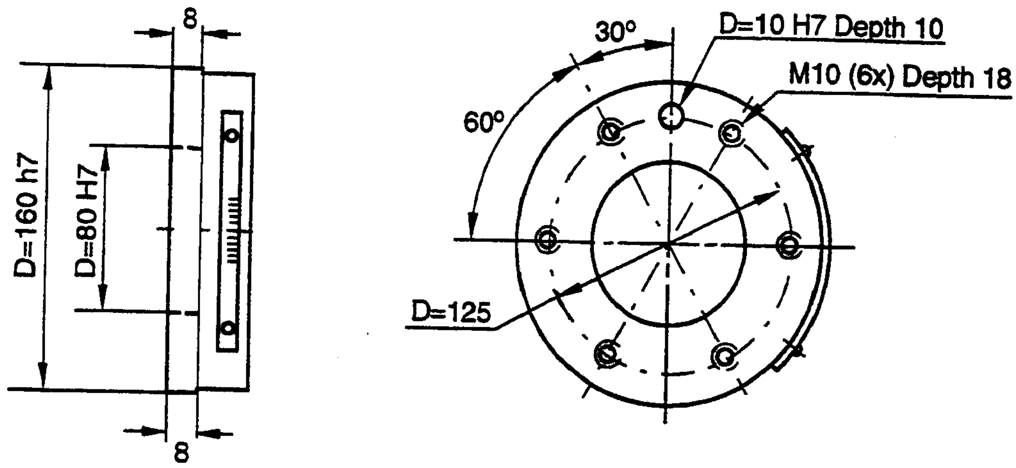

Figure 27 The mechanical interface (mounting flange) ISO 9409. (Measures in mm).

3.5 Programming

The programming language – RAPID – is a high-level application-oriented programming language and includes functionality, such as

- functions and procedures
- routine parameters
- arithmetic and logical expressions
- arrays of up to three dimensions
- modular programs
- global and local data and routines.

The following sets of instructions/functions are available. A subset of instructions to suit the needs of a particular installation, or the experience of the programmer, can be installed in pick lists. Program routines can easily be made, acting like new instructions.

Miscellaneous

:=	Assigns a value
WaitTime	Waits a given amount of time
WaitUntil	Waits until a condition is met
comment	Inserts comments into the program
Dim	Gets the size of an array
Present	Tests if an optional parameter is used

To control the program flow

ProcCall	Calls a new procedure
RETURN	Finishes execution of a routine
FOR	Repeats a given number of times
GOTO	Goes to (jumps to) a new instruction
Compact IF	If a condition is met, then execute one instruction
IF	If a condition is met, then execute a sequence of instructions
label	Line name (used together with GOTO)

TEST	Depending on the value of an expression ...
WHILE	Repeats as long as ...
Stop	Stops execution
EXIT	Stops execution when a restart is not allowed
Break	Stops execution temporarily
Motion settings	
AccSet	Reduces the acceleration
ConfJ	Controls the robot configuration during joint movement
ConfL	Monitors the robot configuration during linear movement
LimConfL	Defines the permitted deviation in the robot configuration
VelSet	Changes the programmed velocity
GripLoad	Defines the payload
SingArea	Defines the interpolation method through singular points
PDispOn	Activates program displacement
PDispSet	Activates program displacement by specifying a value
DefFrame	Defines a program displacement automatically
PDispOff	Deactivates program displacement
EOffsOn	Activates an offset for an external axis
EOffsSet	Activates an offset for an external using a value
EOffsOff	Deactivates an offset for an external axis
Soft Ask	Activates soft servo for an robot axis
Motion	
MoveC	Moves the TCP circularly
MoveJ	Moves the robot axis by joint movement
MoveL	Moves the TCP linearly
SearchC	Searches during circular movement
SearchL	Searches during linear movement
HoldMove	Holds the robot movements until RlsMove
RlsMove	Releases the robot movements
ActUnit	Activates an external mechanical unit
DeactUnit	Deactivates an external mechanical unit
Offs	Displaces a position
CPos	Reads current position (only *x, y, z*)
CRobT	Reads current robot position (the complete *robtarget*)
ORobT	Removes a program displacement from a position
Input and output signals	
InvertDO	Inverts the value of a digital output signal
PulseDO	Generates a pulse on a digital output signal
Reset	Resets a digital output signal
Set	Sets a digital output signal
SetAO	Changes the value of an analog output signal
SetDO	Changes the value of a digital output signal
SetGO	Changes the value of a group of digital output signals
WaitDI	Waits until a digital input is set
AInput	Reads the value of an analog input signal
DInput	Reads the value of a digital input signal
DOutput	Reads the value of a digital-output signal
GInput	Reads the value of a group of digital input signals
GOutput	Reads the value of a group of digital output signals
TestDI	Tests if a digital input signal is set

Communication	
TPErase	Erases text printed on the teach pendant
TPWrite	Writes on the teach pendant
TPReadFK	Reads function keys
TPReadNum	Reads a number from the teach pendant
System & Time	
ClkReset	Resets a clock used for timing
ClkStart	Starts a clock used for timing
ClkStop	Stops a clock used for timing
ClkRead	Reads a clock used for timing
CDate	Reads the current date as a string
CTime	Reads the current time as a string
GetTime	Gets the current time as a numeric value
Mathematics	
Add	Adds a numeric value
Clear	Clears the value
Decr	Decrements by 1
Incr	Increments by 1
Abs	Gets the absolute value
Service	
TestSig	Generates analog test signals on backplane outputs
Support	
ErrWrite	Writes one error message to TP and program log
OpMode	Reads actual operating mode of the system
RunMode	Reads actual running mode of the system
Arc welding (option 551)	
ArcL	Arc welding with linear movement
ArcC	Arc welding with circular movement
Spot welding (option 552)	
SpotL	Spot welding with linear movement
Motion (option 581)	
StopMove	Stops robot motion
StartMove	Restarts robot motion
StorePath	Stores the path when an interrupt occurs
RestoPath	Restores the path after an interrupt
TriggC	Position fix output during circular movement
TriggL	Position fix output during linear movement
Interrupts	
ISignalDI	Orders interrupts from a digital input
ITimer	Orders a timed interrupt
IDelete	Cancels an interrupt
ISleep	Deactivates an interrupt
IWatch	Activates an interrupt
IDisable	Disables interrupts
IEnable	Enables interrupts
CONNECT	Connects an interrupt to a trap routine

Error Recovery

EXIT	Terminates program execution
RAISE	Calls an error handler
RETRY	Restarts following an error
RETURN	Returns to the routine that called the current routine

Communication (option 581)

Open	Opens a file or serial channel
Close	Closes a file or serial channel
Write	Writes to a character-based file or serial channel
WriteBin	Writes to a binary serial channel
ReadNum	Reads a number from a file or serial channel
ReadStr	Reads a string from a file or serial channel
ReadBin	Reads from a binary serial channel

Communication (option 591)

SCWrite	Sends a message to the computer (using RAP)

Memory

Use memory for Rapid instructions:

Basic	1.0 Mbyte	approx. 1500-3000	Depending on
Extended	3.0 Mbyte	approx. 4500-9000	type of

instruction

Mass storage[1] :

RAM memory	100 kbyte		5 sec./Mbyte
Diskette	1.44 Mbyte	approx. 15000	2 min./Mbyte

[1] Requires approx 3 times less space than in the program memory

Type of diskette: 3.5" 1.44 Mb (HD) MS DOS format.
Programs and all user-defined data are stored in ASCII format.

3.6 Automatic Operation

The following production window commands are available:

- Load/select the program
- Start the program
- Execute instruction-by-instruction (forward/backward)
- Simulate wait condition
- Reduce the velocity temporarily
- View data
- Display program-controlled comments (which tell the operator what is happening)

3.7 Maintenance and Troubleshooting

The robot requires only a minimum of maintenance. Certain routines check and actions should be carried out at regular intervals, the shortest interval once a year.
For detailed information on maintenance procedures, see Maintenance section in the Product Manual.

3.8 Robot Motion

Type of motion		Range of movement	
Axis 1	Rotation motion	+180° - -180°	
Axis 2	Arm motion	+70° - -70°	+140° – +10° (S /2.9-120)
Axis 3	Arm motion	+105° - -28°	+155° – +47° (S /2.9-120)
Axis 4	Wrist motion	+300° - -300°	+200° – -200° (PE /2.25-75)
Axis 5	Bend motion	+120° - -120°	
Axis 6	Turn motion	+300° - -300°	

IRB 6400 /2.4-120, /2.4-150, /2.8-100, /3.0-75 and PE/2.25-75

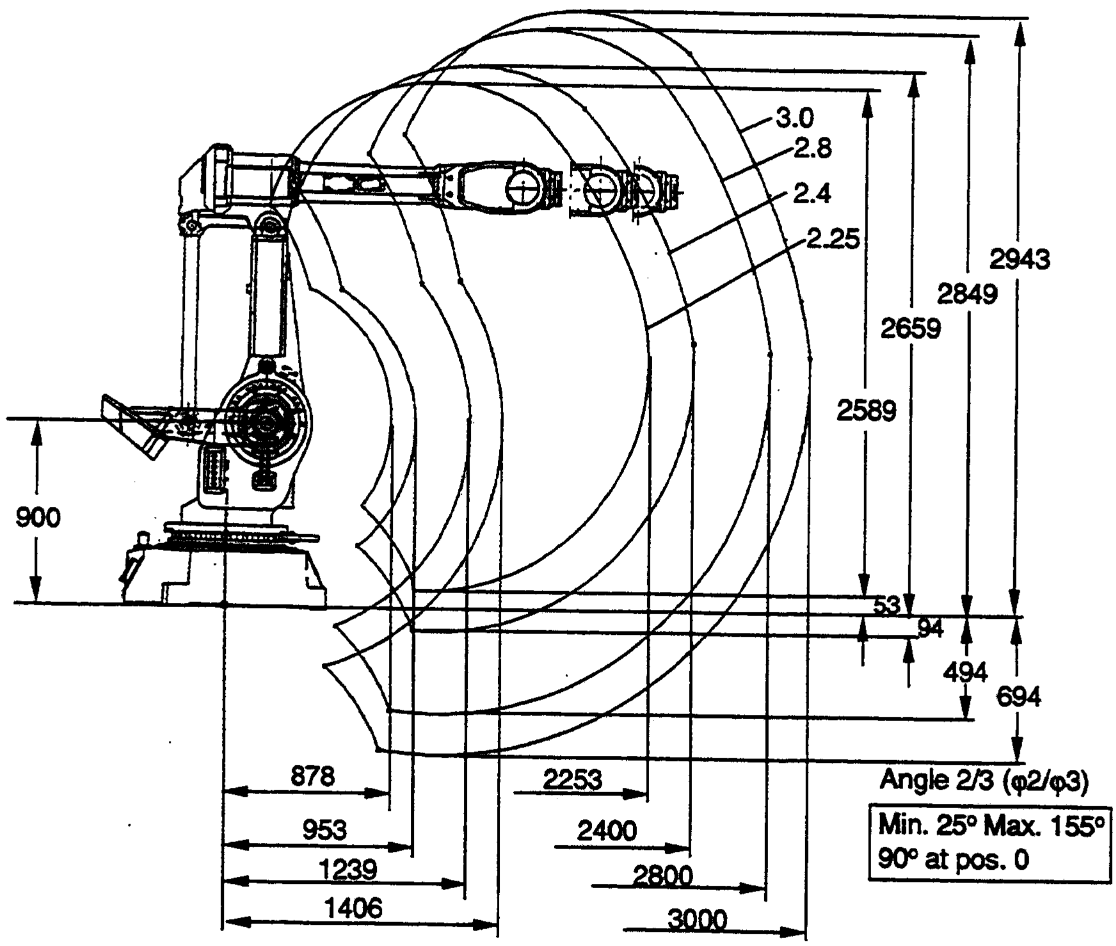

All measures refer to the wrist centre (mm)

Positions at wrist centre (mm)

pos.	2.4-120 2.4-150 x	2.4-120 2.4-150 z	2.8-100 x	2.8-100 z	3.0-75 x	3.0-75 z	2.25PE-75 x	2.25PE-75 z
0	1488	2075	1892	2075	2094	2075	1338	2075
1	388	2034	695	2224	873	2318	205	1963
2	571	1563	974	1598	1175	1615	421	1549
3	680	314	575	-77	523	-271	718	459
4	962	-89	857	-479	805	-674	1000	56
5	2395	1336	2798	1300	2999	1283	2246	1349
6	1802	2467	2159	2657	2337	2752	1669	2397

Angle φ2, φ3 (degrees)

pos.	axis 2 (φ2)	axis 3 (φ3)
0	0	0
1	-70	-28
2	-70	-5
3	40	105
4	70	105
5	70	5
6	37	-28

Figure 28 The extreme positions of the robot arm

IRB 6400S /2.9-120

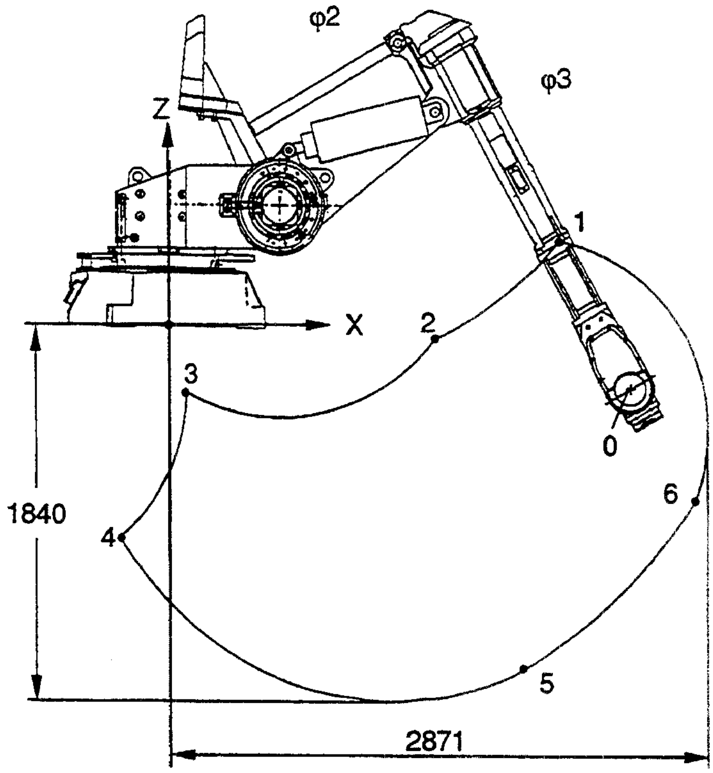

All measures refer to the wrist centre (mm)

Angle 2/3 (φ2/φ3)

Min. 25° Max. 155°
90° at pos. 0

Positions at wrist centre (mm)

pos.	x	z
0	2464	-282
1	2086	449
2	1418	-46
3	94	-317
4	-245	-1045
5	1863	-1709
6	2768	-917

Angle φ2, φ3 (degrees)

pos.	axis 2 (φ2)	axis 3(φ3)
0	60	60
1	10	47
2	10	75
3	90	155
4	140	155
5	140	75
6	117	47

Figure 29 The extreme positions of the robot arm.

Performance according to ISO 9283

Axis no	Individual axis velocity					
	2.4-120	2.4-150	2.8-120	3.0-75	S/2.9-120	PE/2.25-75
1	100°/s	90°/s	100°/s	100°/s	100°/s	70°/s
2	100°/s	90°/s	100°/s	100°/s	100°/s	70°/s
3	100°/s	90°/s	100°/s	100°/s	100°/s	70°/s
4	210°/s	120°/s	210°/s	210°/s	210°/s	210°/s
5	150°/s	120°/s	150°/s	150°/s	150°/s	150°/s
6	210°/s	190°/s	210°/s	210°/s	210°/s	210°/s

Pose characteristics

100% of rated load, 100% of velocity

Unidirectional pose repeatability
RP = 0,4 mm

3.9 External Axes

An external axis can be either:

- an AC motor (IRB motor type or similar) controlled via a drive unit mounted in the cabinet, with the maximum of one drive unit, (see Figure 30) or
- a DC/AC motor controlled via an external drive unit (see Figure 31).

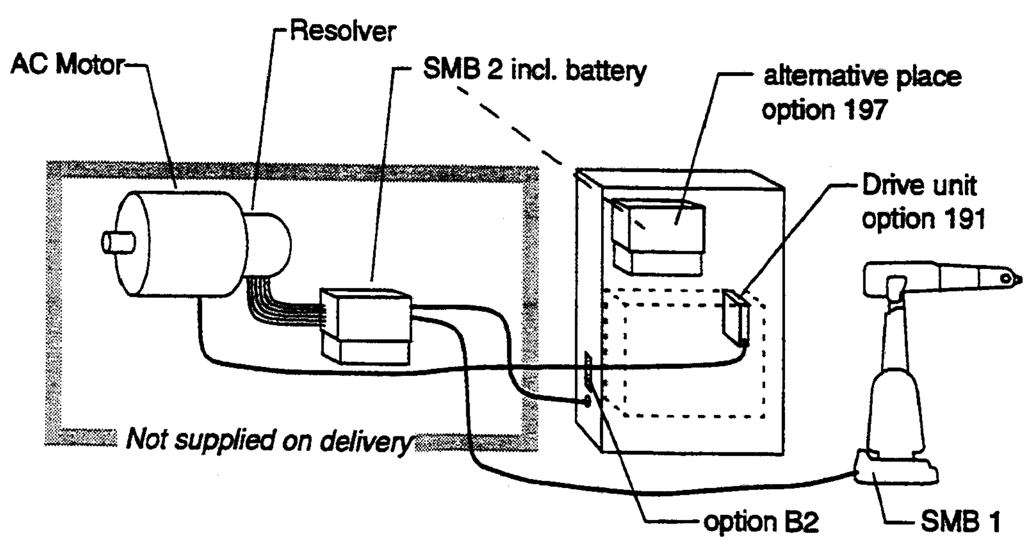

Figure 30 External axes with an internal drive unit (option 191).

Resolver	Connected to motor shaft Transmitter type resolver Voltage ratio 2:1 (rotor: stator)
Resolver supply	5.0 V/4 kHz

Absolute position is accomplished by battery-backed resolver revolution counters in the serial measurement board (SMB).

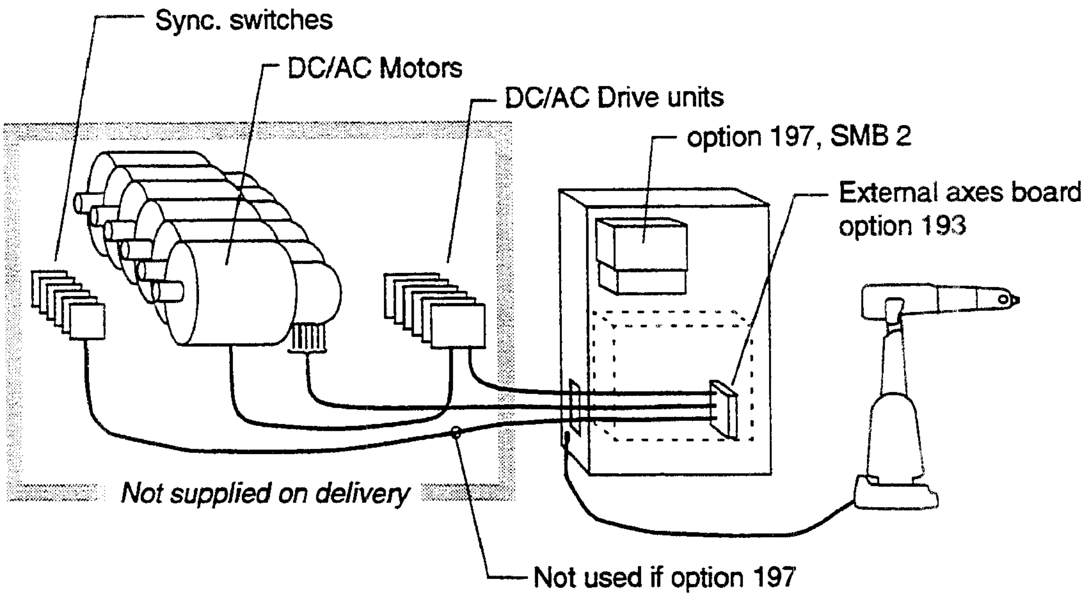

Figure 31 External axes with external drive units.

Speed reference to drive unit	± 10 V analog
Motor speed	Maximum 3000 r.p.m.
POWER OK	24 V DC from controller
Sync. switch	24 V DC
Resolver specification	Transmitter type resolver
	Voltage ratio 2:1 (rotor: stator)
Resolver supply	5.6 V/2 kHz (option 193)
Resolver supply	5.0 V/4 kHz (option 197)

Absolute position is accomplished by battery backed up resolver revolution counters in the serial measurement board (SMB 2).

Relative position is accomplished by defining the synchronization position by use of synch switches each time the robot is powered on.

3.10 Inputs and Outputs

Types of connection

The following types of connection are available:

- Connectors on the side of the cabinet
- Screw terminals
- Screw terminals with relay units
- Air and signal connections to upper arm

For more detailed information, see Chapter 4: *Specification of Variants and Options.*

I/O boards

Several I/O boards can be used. The following table shows the number of signals that can be used on each board.

Type of board	Digital		Analog			Max. boards[1] of each type	Power supply
	In	Out	In	Voltage output	Current output		
System board	3					Standard	Internal
Digital I/O	16	16				6	Internal/External[2]
Analog I/O			4	3	1	1[3]	Internal/External
AD Combi I/O	16	16		2		1[3]	Internal/External[2]
Remote I/O Allen Bradley	128	128				1[4]	

1. A total of up to six I/O boards (but max 256 channels totally excluding system board channels), in addition to the system board, can be installed.
2. The digital signals are supplied in groups, each group having 8 inputs or outputs.
3. A maximum of one board with analog signals.
4. Takes up two board slots.

Signal data

Digital inputs	(options 20x/238 + 31x/33x)	
	Optically-isolated	
	Rated voltage supply, 19-35 V,	24 V DC
	Logical voltage levels: "1"	15-35 V
	"0"	0-5 V
	Input current at rated input voltage:	5.5 mA
	Maximum potential difference:	500 V
	Time intervals:	≤ 8 ms (hardware) + 1-11 ms (software)
	System board time intervals:	≤ 1,5 ms (hardware) + < 2 ms (software)
Digital outputs	(options 20x/238 + 31x/33x)	
	Optically-isolated, short-circuit protected	
	Voltage supply, 19-35 V, nominal	24 V DC
	Minimum voltage drop on output:	2 V
	Load per output:	200 mA
	Load per group of 8 outputs:	1 A
	Maximum potential difference:	500 V
	Time intervals:	< 150 µs (hardware) + < 2 ms (software)
Digital outputs via relay unit	(options 20x/238 + 37x)	
	Load per output:	4 A
	Load per group of 8 outputs	6.3 A
	Voltage range (source):	250 V AC
Digital inputs via 120 V AC modules		
	(options 20x/238 + 35x)	
	Voltage range:	90–140 V
	Input current:	< 8 mA

Digital outputs via 120 V AC modules	(options 20x/238 + 35x)	
	Load per output:	1.25 A
	Voltage range (source):	24–140 V AC
	Frequency range (source):	25–70 Hz
	Maximum potential difference:	2 kV
Analog inputs	(options 227 + 31x/33x)	
	2 with switching frequency:	10 Hz for the input filter
	2 with switching frequency:	100 Hz for the input filter
	Input impedance:	1 Mohm
	Input voltage:	±10 V
	Resolution:	10 mV (10/1024 V)
	Accuracy:	15 mV + 0.2% of input signal
	Maximum potential difference:	500 V
Analog outputs	(options 227/238 + 31x/33x)	
	Voltage outputs	
	Output voltage, Analog board:	± 10 V (H 27)
	Output voltage, AD Combi board:	0 – +10 V (H 38)
	Load:	> 2 kohm
	Resolution:	10 mV (10/1024 V)
	Accuracy:	25 mV + 0.5% of output signal
	Maximum potential difference:	500 V
	Current output	
	Output current:	± 20 mA
	Load:	< 450 ohm
	Resolution:	20 μA (20/1024 mA)
	Accuracy:	60 μA + 0.5% of output current
	Maximum potential difference:	500 V

Signal connections on robot arm

Signals	23	50 V, 250 mA
Power	10	250 V, 2 A
Protective earth	1	

System signals

Signals can be assigned to special system functions. Several signals can be given the same functionality.

Digital outputs	Motors on/off
	Executes program
	Error
	Automatic mode
	Emergency stop
Digital inputs	Motors on/off
	Starts program from where it is
	Starts program from the beginning
	Stops program

	Stops program
	Stops program when the program cycle is ready
	Executes "trap routine" without affecting status of stopped regular program[1]
	Loads and starts program from main[1]
	Resets error
	Resets emergency stop
	Synchronizes external axes
Analog output	TCP speed signal

1. Program can be decided when configuring the robot.

3.11 Serial Communication

The robot has four serial channels - three RS232 and one RS485 - which can be used to communicate with printers, terminals, computers and other equipment.

The speeds the serial channels can use are:

- 300-19200 bit/s for RS232
- 300-38400 bit/s for RS485

Character-based or binary information can be transferred using RAPID instructions.

In addition to this, a Robot Application Protocol (RAP) based on MMS functionality, can be used. The following functions are supported:

- Start and stop program execution
- Transfer programs to/from the robot
- Read the robot status
- Read and write data
- Read and write output signals
- Read input signals
- Read error messages
- Change the robot mode

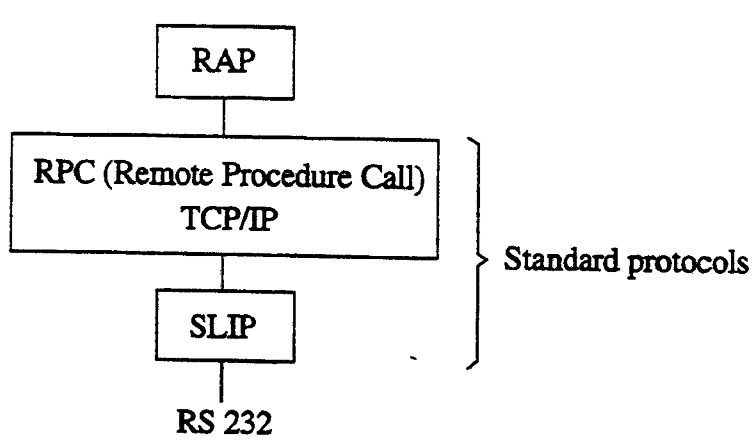

3.12 SpotWare

A few examples of some useful functions available in a system in which SpotWare is installed are given below. Thanks to its flexible design, SpotWare is easy to use and the system can be easily customized for new requirements.

Adaptation to different equipment

The robot can handle different types of weld timers and weld guns. The signals used and the timing sequence between the weld controller, the weld gun and the robot motion can be easily adapted to new or modified requirements.

Closing the gun

It is possible to start closing the spot welding gun before reaching the programmed point. By defining a time of closure, the gun can be closed correctly regardless of the speed of the robot at that time. The cycle time is optimized if the gun is just about closed at the instance when the robot reaches the programmed point.

Customized Move enable

The movement after a completed spot weld can be configured to start either on a user defined input signal or a delay time after weld ready.

Immediate move after Move enable

The robot moves immediately when enable is given. This is achieved by preparing the next action while waiting for the actual weld completed.

Simulation of weld timer

The program can be test run without connecting a weld timer or spot welding gun. This makes testing easier.

Gun control

The system supports double guns, small and large strokes and gun pressure control. Several guns can be controlled in the same program.

Testing the program

The program can be run one instruction at a time, both forwards and backwards. When it is run backwards, only motion instructions, together with an inverted gun movement, are executed. This makes the program easier to test.

Rewelds

A function that can be configured to order one or more automatic rewelds or, when the system is restarted after an error, a manual reweld.

Process error routines

In the event of a process error, installation-specific routines, such as go-to-service position, can be ordered manually. When the appropriate routine has been performed, the weld cycle continues from where it was interrupted.

In addition to the above functions specific to SpotWare, the following general functions can be used when spot welding:

Stationary Gun

When a fixed gun is used whilst the robot is holding a workpiece, that workpiece is moved and reoriented in relation to the fixed gun to get the correct path on the workpiece.

Object coordinate system

Programming is carried out in the coordinate system of the programmed object (e.g. of a car). This makes programming easier.

Restart

It is possible to restart the program and keep the same path and process control after an emergency stop or a process stop.

Tool displacement

The program does not have to be readjusted after a tool is changed or displaced if, for example, there is a collision. Just the new dimensions of the tool have to be defined. Automatic tool measurement is supported.

Manual servicing routines

Servicing routines can be easily adapted to, for example, tip dress, go-to-service position/go-to-home position and calibration of gun closing time.

Application error handling

In addition to built-in handling of process errors, there are comprehensive tools for installation-specific error handling, generating customized error messages and logging plant-specific events.

3.13 ArcWare

Configuration

In order to facilitate installation and to achieve optimum performance, ArcWare is configured on delivery for the used equipment.

Interface signals

The following process signals are, if installed, handled automatically by ArcWare, making it possible to operate weld controllers with digital, analog and combined interfaces. The robot can also support dedicated signals for workpiece manipulators and sensors. Other signals can also be used, but this requires some basic RAPID programming.

Digital outputs	Description
Power on/off	Turns weld on or off
Gas on/off	Turns gas on or off
Wire feed on/off	Turns wire feed on or off
Wire feed direction	Feeds wire forward/backward
Weld error	Weld error
Error information	Digital outputs for error identification
Weld program number	4-bit parallel port for selection of program number, or 3-bit pulse port for selection of program number

Digital inputs	Description
Arc OK	Arc established; starts weld motion
Voltage OK	Weld voltage supervision
Current OK	Weld current supervision
Water OK	Water supply supervision
Gas OK	Gas supply supervision
Wire feed OK	Wire supply supervision
Manual wire feed	Manual command for wire feed
Weld inhibit	Blocks the welding process
Weave inhibit	Blocks the weaving process
Stop process	Stops/inhibits execution of arc welding instructions
Wirestick error	Wirestick supervision

Analog outputs	Description
Voltage	Weld voltage
Wire feed	Velocity of wire feed
Voltage adjustment	Voltage synergic line amplification
Current adjustment	Current synergic line amplification

Arc welding functions

A large number of dedicated functions are available, making it possible to customize the welding sequence and the I/O communication with the welding equipment to meet most needs.

The main process functions are:

- Gas purge
- Gas preflow
- Gas postflow
- Material heating
- Arc restart
- Automatic weld retry
- Scrape start
- Weld weaving
- Crater filling
- Wire burnback
- Wire rollback
- Material cooling
- Current control and monitoring
- Gas control and monitoring
- Water control and monitoring
- Wire feed control and monitoring
- Weld error report and logging
- Weaving (zigzag, triangular or V-shaped)
- Seam tracking using weld guide

The most important manual functions are:

- On-line process tuning of:
  - Weld speed
  - Wire feed
  - Voltage
  - Weaving amplitude
  - Weave bias
  - Weave height

- Process blocking:
  - Welding
  - Weaving

4 Specification of Variants and Options

The different versions of and options for the IRB 6400 are described below. The same numbers are used here as in the Specification form.

20 ROBOT VERSIONS

		Option included
22	IRB 6400 /2.4-120	
23	IRB 6400 /2.4-150	
24	IRB 6400 /2.8-120	
26	IRB 6400 /3.0-75	
27	IRB 6400S /2.9-120	
28	IRB 6400PE /2.25-75	50
32	IRB 6400F /2.4-120	
33	IRB 6400F /2.4-150	
34	IRB 6400F /2.8-120	
36	IRB 6400F /3.0-75	
37	IRB 6400FS /2.9-120	

IRB 6400 Application, Mounting / Reach-Handling capacity

Application:	PE	Robot adapted for poke welding as in Chapter 3.4.
	F	Robot adapted for foundry environments. Degree of protection as in Chapter 3.4. The manipulator is specially painted and finished.
Mounting:	-	Floor-mounted manipulator.
	S	Shelf-mounted manipulator.
Reach:	x.x	Specifies the max. reach at the wrist centre.
Handl. capacity:	yyy	Specifies the max. handling capacity

40 APPLICATION INTERFACE

Air supply and signals for extra equipment to upper arm

43x Hose for compressed air is integrated into the manipulator. There is an inlet at the base and an outlet on the upper arm housing.
Connections: R1/2" in the upper arm and R1/2" at the base.

For connection of extra equipment on the manipulator, there are cables integrated into the manipulator's cabling and one Burndy 23-pin UTG 014-23S and one Burndy 12-pin UTG 014-12S connector on the moveable part of the upper arm.

Number of signals: 23 signals 50 V, 250 mA, 10 power signals 250 V, 2 A, one protective earth.

Air and signal interfaces to the upper arm are supplied as standard on the S /2.9-120 and PE /2.25-75 versions.Connections: R1/2" in the upper arm and R1/2" at the base.

45 The signals are connected directly to the robot base to one Burndy 12-pin UTG 014-12P (R1.CP), and one Burndy 23-pin UTG 014-23P (R1.CS) connector (see Figure 32). The cables from the manipulator base are not supplied.

65x The signals are connected to the controller:
Cables for connection to contacts R1.CP and R1.CS are supplied.

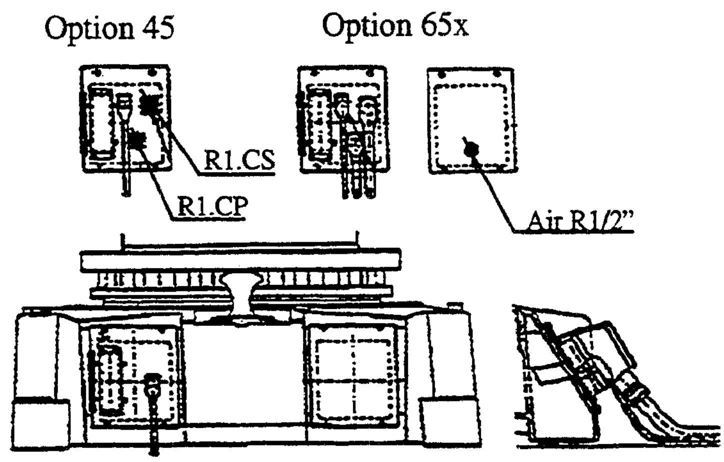

Figure 32 Connection of signals to the base.

50 COOLING DEVICE FOR AXIS 1 MOTOR

51 PT adaption for IRB 6400/ 2.8-120.
When using version 2.8-120 as in the technical specification "Handling capacity for IRB 6400/ 2.8-120 in presstending applications, a cooling device must be installed for axis 1. This option consists of a fan fitted to the frame on the side of the motor for axis 2, connected to the controller by means of the control cable for the motors.
The fan (230 V AC) starts operating in the MOTORS ON mode. It exhausts air through a replaceable filter. Replacement filters (3) are supplied with the extra cooling device.

5x Cooling motor axis 1
If the cooling device is used on axis 1 the robot can be used for heavy duty on this axis. On version S /2.9-120, the fan is fitted to the side of the motor for axis 3. The cooling device is supplied as standard on version PE /2.25-75.
The cabling included with the IRB 6000 TG Spot Welding system cannot be used together with a fan.
This option is not intended for use in Foundry versions.

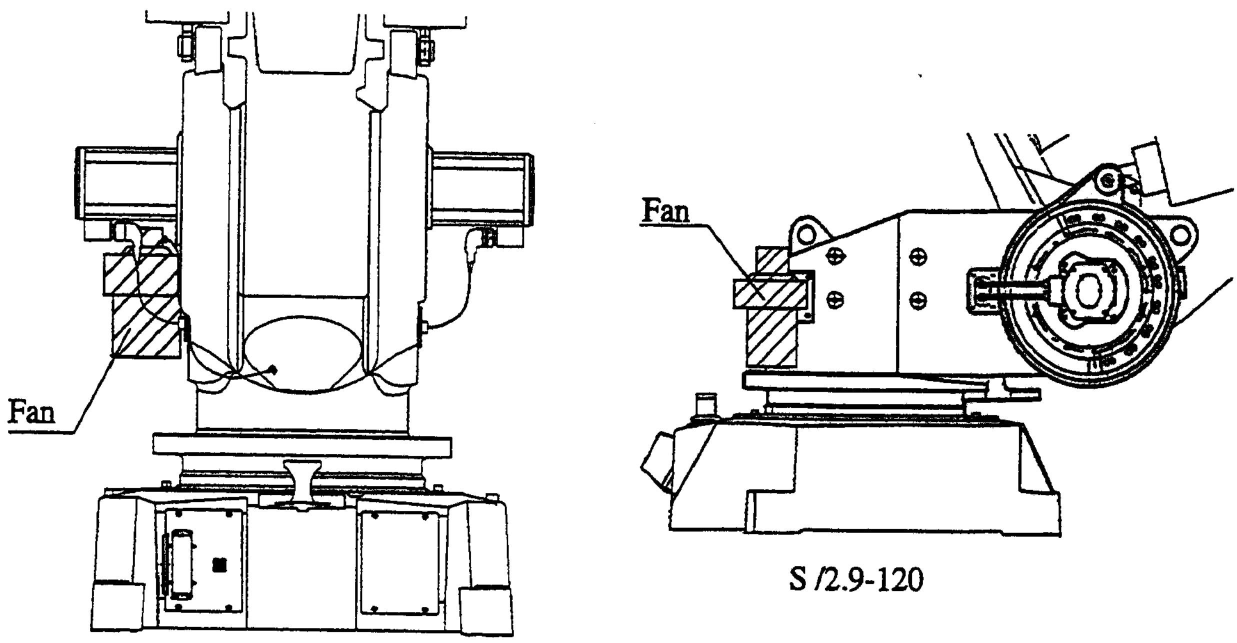

Figure 33 Location of the fan on the manipulator.

60 LIFTING DEVICE FOR FORK-LIFT TRUCK

6x Lifting device on the manipulator for fork-lift is mounted at delivery.
Lifting eyes for use with an overhead crane are included as standard.

70 POSITION SWITCH AXIS 1

Switches indicating the position of axis 1 used.
Designs with 1, 2 or 3 switches are available. Note that this option may require external safety arrangements, e.g. light curtains, photocells or contact mats.
The signals are connected to the controller (see Figure 40), by a separate cable from the manipulator base, R1.SW, (see Figure 34 and Figure 32).

7x 1 switch
8x 2 switches
9x 3 switches

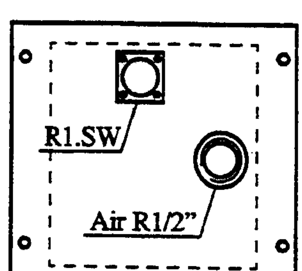

Figure 34 Connection of position switch signals to the base.

Connections: R1/2" in the upper arm and R1/2" at the base.

For connection of extra equipment on the manipulator, there are cables integrated into the manipulator's cabling and one Burndy 23-pin UTG 014-23S and one Burndy 12-pin UTG 014-12S connector on the moveable part of the upper arm.

120 CONNECTION OF THE MANIPULATOR CABLES

The cables from the manipulator can be connected to the controller in two different ways:

121 Cable connections on left-hand side of the cabinet (see Figure 2 in Description).

122 Cable connections on roof (see Figure 35).

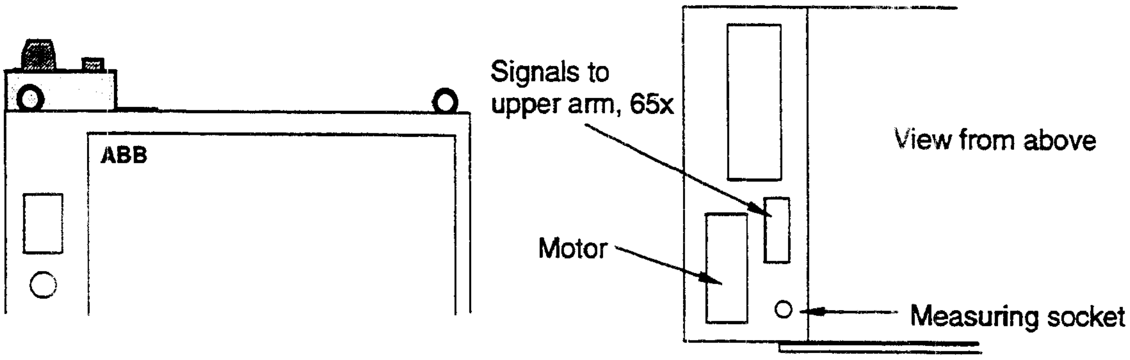

Figure 35 Cable connections on the roof of the cabinet.

130 CONNECTION OF MAINS

The power is connected either inside the cabinet or to a connector on the cabinet's left-hand side. The cable for the connector is not supplied.

131 Cable gland for inside connection.
Diameter of cable: 11-12 mm.
Connection via a power intake in accordance with IEC 309-1, -2, and CEE 17 standards (see Figure 36). Only for 400V mains voltage.

132 16 A, 380-415 V, 3p + PE
133 32 A, 380-415 V, 3p + PE
135 16 A, 380-415 V, 3p + N + PE
136 32 A, 380-415 V, 3p + N + PE

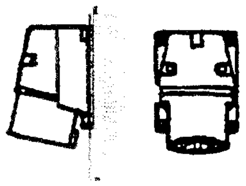

Figure 36 CEE male connector.

134 Connection via an industrial Harting 6HSB connector in accordance with DIN 41640 (see Figure 37).
35 A, 600 V, 6p + PE

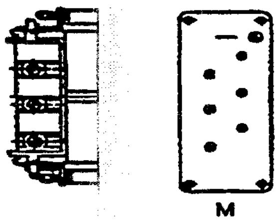

Figure 37 DIN male connector.

140 MAINS SWITCH

141/142 Rotary switch in accordance with the standard in section 3.2 and IEC 337-1, VDE 0113.

143/144 Rotary switch acc. to 141/142 with a 16 A circuit breaker for short circuit protection of main cables in the cabinet. Circuit breaker approved in accordance with IEC 898, VDE 0660.

145/146
147/148 Front-operated flange disconnect switch in acc. with the standard in section 3.2 with integrated 20 A circuit breaker for short circuit protection of main cables in the cabinet. The door is mechanically interlocked when the switch is in the ON position. See table for I/O terminals (see). Occupies two modules.

150 MAINS VOLTAGE

The robot can be connected to a rated voltage of between 200 V and 600 V, 3-phase + protective earthing. A voltage fluctuation of +10% – -15% is permissible in each connection.

151-	Transformer 1	Transformer 2	Transformer 3
178	200 V		
	220 V		
	400 V	400 V	
		440 V	
		475 V	475 V
		500 V	500 V
			525 V
			600 V

180 OPERATOR'S PANEL

The operator's panel and teach-pendant holder can be installed either

181 on the front of the cabinet, or

182 in a separate operator's unit.
All necessary cabling, including flange, connectors, sealing strips, screws, etc., is supplied.
Cable length: 15 m. External enclosure is not supplied.

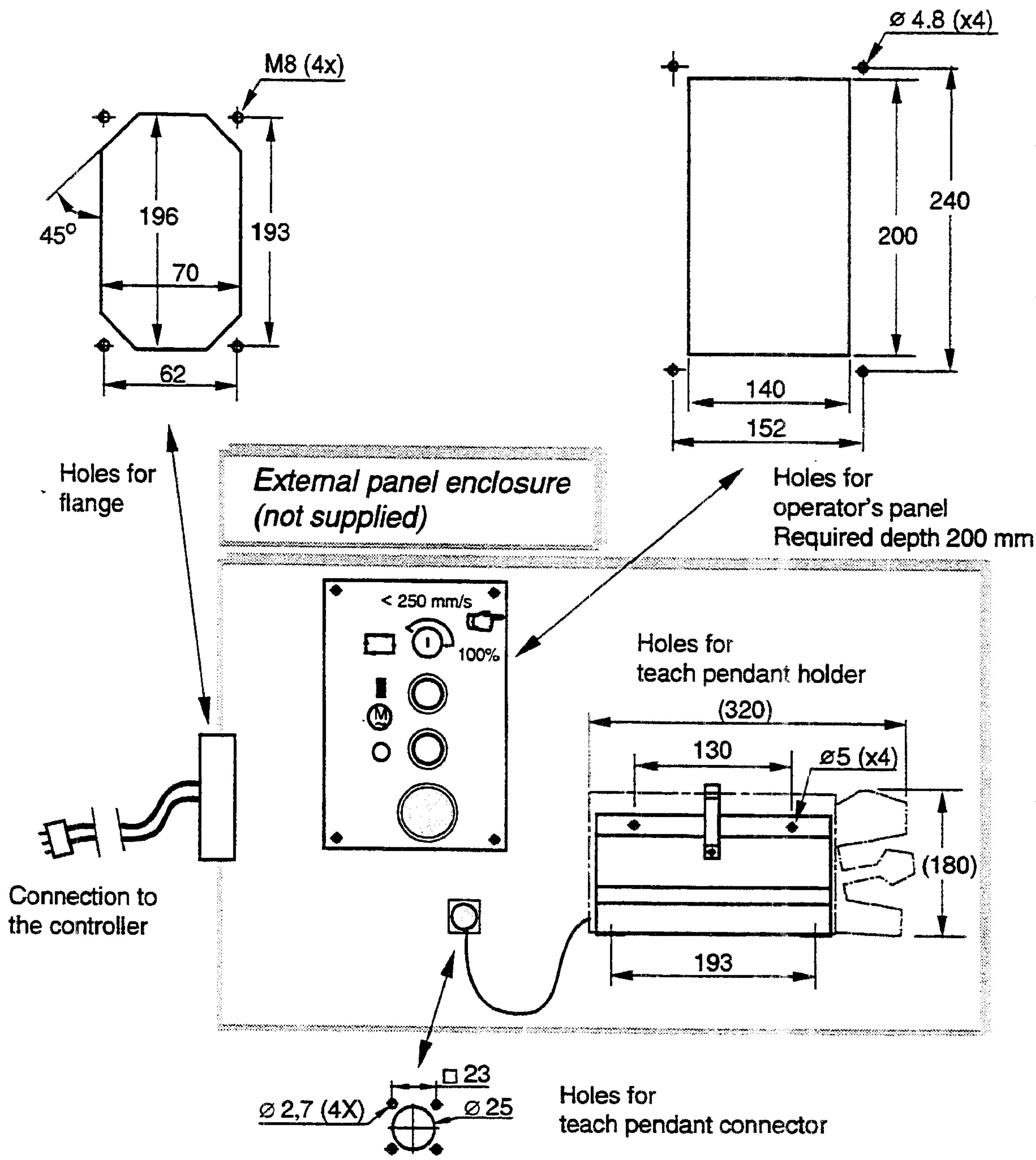

Figure 38 Required preparation of external panel enclosure (all measures in mm).

190 EXTERNAL AXES

191 The controller is equipped with an integrated drive unit for an external axis. The resolver can be connected to a serial measurement board (not supplied) outside the controller or to one that is built in (option 197). The drive unit is of type C for 7 amps current.

B1 Cabling from drive unit to a standard industrial 64-pole female connector, according to DIN 43562. Customer motor male connector is to be mounted inside the cabinet on the rear wall.

B2 The motor is connected to a standard industrial 64-pin female connector, in acc. with DIN 43562, on the left-hand side of the cabinet. For the corresponding male connector, see option 67x.

193 External axes board.
Signal interface for external axes with external drive units. Six external axes (5 if combined with option 191) can be connected. The signals (speed reference, supply to and feedback from resolvers and sync. switches) are accessible in a standard industrial 64-pin female connector, in acc. with DIN 43562, on the left-hand side of the cabinet. For the corresponding male connector, see option 67x. As sync. switches are used, the axes must be synchronized when the power is switched on. If all axes are to be positioned absolutely when the power is switched on, a serial measurement board (option 197) is required. (See Figure 39).

197 Serial measurement board.
Signal interface to external axes with absolute position at power on. The board is located in the cabinet. See Figure 39 for I/O terminal limitations. The board occupies one module.

C1 No wiring supplied. The resolvers are connected directly to the serial measurement board D-sub connectors.

C2 The resolvers are connected to a standard industrial 64-pin female connector, in acc. with DIN 43562, on the left-hand side of the cabinet. For the corresponding male connector, see option 67x.

200 I/O BORDS

The robot can be equipped with up to 6 I/O boards. For more details, see Technical Specification 3.10.

20x Digital I/O board: 16 inputs/16 outputs.

227 Analog I/O board: 4 inputs/4 outputs; max. 1 board.

238 AD Combi I/O board: 16 digital inputs/16 digital outputs and 2 analog outputs (0-10V); max. 1 board.

241 Remote I/O board for Allen Bradley; max. 1 board.

Up to 128 digital inputs and outputs, in groups of 32, can be transferred serially to a PLC equipped with an Allen Bradley 1771 RIO node adapter. Connection is made via screw terminals on the rear side of the swing-out frame. The RIO board occupies two board slots in the rack.

290 ADAPTATION TO AW

291 One Digital I/O board (see 20x), one AD Combi I/O board (see 238) and one external axes board (see 193) are supplied. The connections to the controller are adapted for an interface with an ABB ESAB separate control system for DC-powered workpiece manipulators.

300 CONNECTION OF I/O BOARDS
Space available for I/O boards and I/O connections:

Space available	In the I/O rack	On the outside left	On the inside rear
112 CABINET	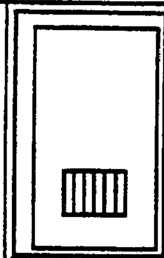 The cabinet rack has 6 slots available for I/O boards	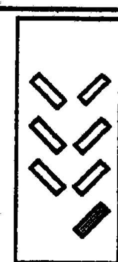 The cabinet left wall has space for a total of 7 connectors for connection of I/O boards	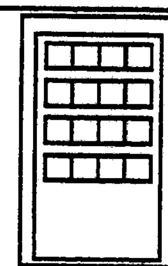 The cabinet rear wall has 16 modules available for the options below

Space needed		300 CONNECTION OF I/O External connectors Option: 31x,	32x	Screw terminal Option: 34x	32x	120 V AC modules Option: 35x	Relay units Option: 37x
200 I/O							
20x Digital 24 V DC qty = Z	*Z	*Z		*Z		Z	*Z
227 Analog 4 in/4 out							
238 AD Combi I/O							
241 RIO board							
140 MAINS SWITCH 145/146 and 147/148 Flange disconnect with circuit breaker							
180 OPERATOR'S PANEL 182 External							
190 EXTERNAL AXES 197 Serial measurement board C2 External connector							
430 POWER SUPPLY TO SERVICE OUTLETS AND LIGHTING 433 Additional transformer							

Figure 39 Table for limitation of I/O connections to the system.

Different signal connections can be selected:

31x External connectors.
Standard industrial female connectors, 64-pin plugs in accordance with DIN 43652, located on the left-hand side of the cabinet.
For corresponding male connectors, see option 67x.

32x Connection of one digital I/O and combi I/O to ABB ESAB AC-powered workpiece manipulator or ABB ESAB Welding equipment solely. The I/O boards are connected to internal (and external) connectors via 3 screw terminals units (see Figure 39).
Note: I/O-bords are not included.

33x Screw terminals.
Signal connections can be connected to different types of terminals.
The terminals are mounted on standard EN 50022 mounting rails (see Figure 39).
The total number of terminals are given in table above.

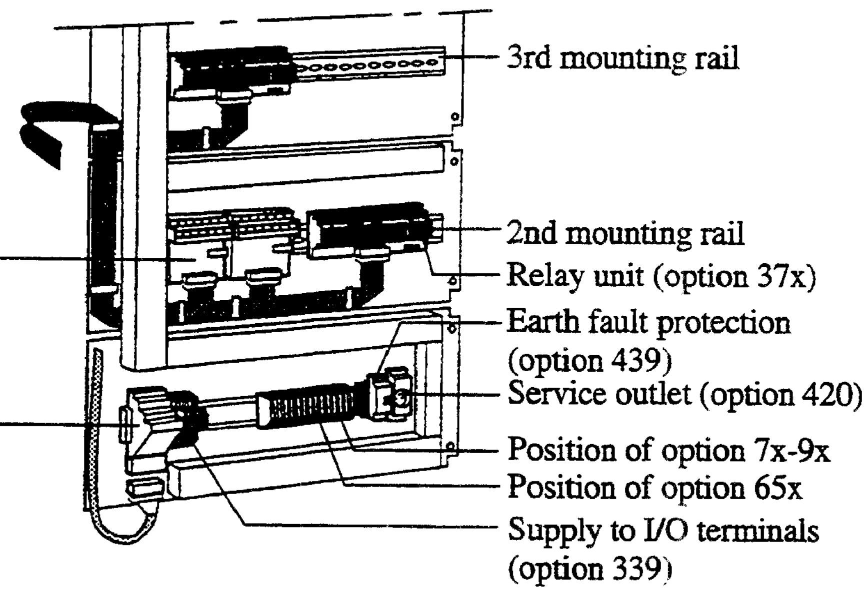

Figure 40 The terminal units are mounted on the rear wall inside the cabinet

Terminal units for I/O boards.

34x Screw terminal units, digital I/O and analog I/O.
Occupies one module.
(see Figure 41).

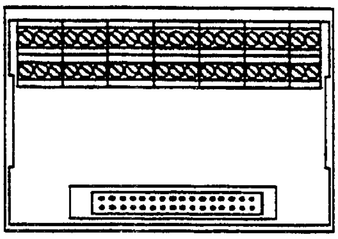

Figure 41 Screw terminal.

37x Relay unit, digital I/O.
Terminal with 16 relays to be used when more current or voltage is required from the digital outputs.
The inputs are not separated by relays.
This option can be combined with 34x. Occupies two modules (see Figure 42).

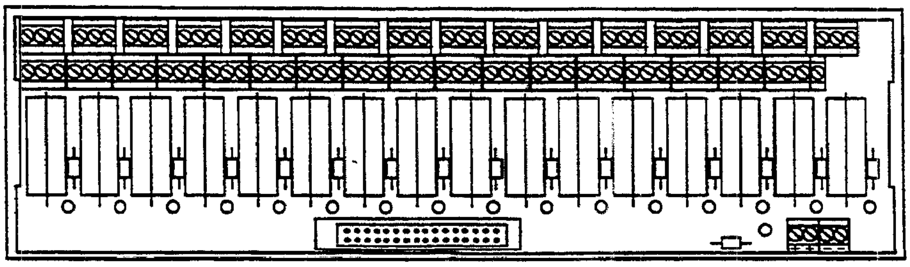

Figure 42 Relay unit.

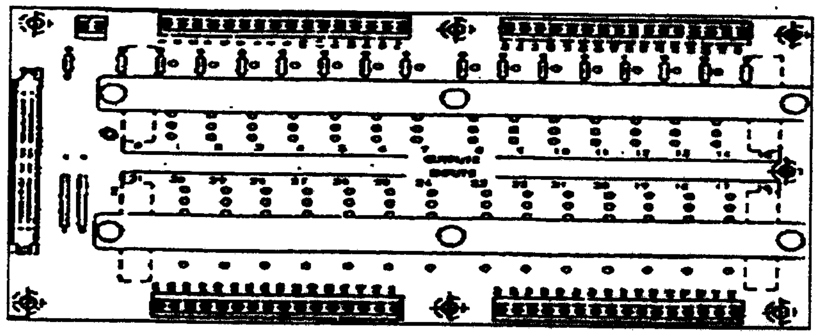

Figure 43 120 V AC Module.

Connections between terminal units and connectors

38x External connectors using screw terminals.
All signals are connected to 64-pin male connectors in accordance with DIN 43652 with pin arrangement according to Product Manual IRB 6400/Installation and Commissioning. For corresponding female connectors see option 68x.

390 As above (38x), but the user determines wire routing by filling in a wiring specification.

339 Supply to I/O terminals via fused terminals.
Eight 2 A fuses to protect the 24 V wiring supplied (see Figure 39).
The fuse terminals are connected to the robot's 24 V DC supply or, if 38x is choosen, for external supply as well as to the screw terminals. The fused terminals can be connected to screw terminal units (option 34x) and relay unit (option 37x)

395 CONNECTION OF SAFETY SIGNALS

D1 External connectors.
Standard industrial 64-pin female connectors, in acc. with DIN 43652, located on the left-hand side of the cabinet. For corresponding male connectors, see option 67x.

D2 Screw terminal.
Terminal on the 1st mounting rail (see Figure 39).

400 ADDITIONAL EQUIPMENT

The robot can be supplied with one or more of the following options:

404 Extended Rapid memory 2 Mb, 1 Mb if option 591 is choosen.

406 Cabinet lighting
The cabinet can be supplied with internal lighting, which switches on when the door is opened. The lighting is installed in the upper part of the cabinet.

407 Cabinet on Castor wheels.

410 SERIAL COMMUNICATION CONNECTION

411 One 25-pin female connector (D-sub) on cabinet front for print-outs. Connected to one RS232 channel.

412 Four channels on screw terminal. The screw terminals are mounted on the inside right-hand wall. Connected to three RS232 channels and one RS485.

413 One connector on cabinet front for print-outs. Connected to one RS232 channel. Three channels on screw terminal. Two are connected to RS232 channels and one is connected to RS485.

420 SERVICE OUTLETS

Any of the following standard outlets with protective earthing can be chosen for maintenance purposes. The outlet is installed on the lowest mounting rail.
The maximum load permitted is 500 VA (max. 100 VA when the cabinet door is closed).

421 230 V mains outlet in accordance with DIN VDE 0620; single socket. Sweden, Germany, and other countries.

422 230 V in accordance with French standard; single socket.

423 120 V in accordance with British standard; single socket.

425 120 V in accordance with American standard; double socket, Harvey Hubble.

430 POWER SUPPLY TO SERVICE OUTLETS AND LIGHTING

The service outlets and lighting can be powered in three different ways (see Figure 44).

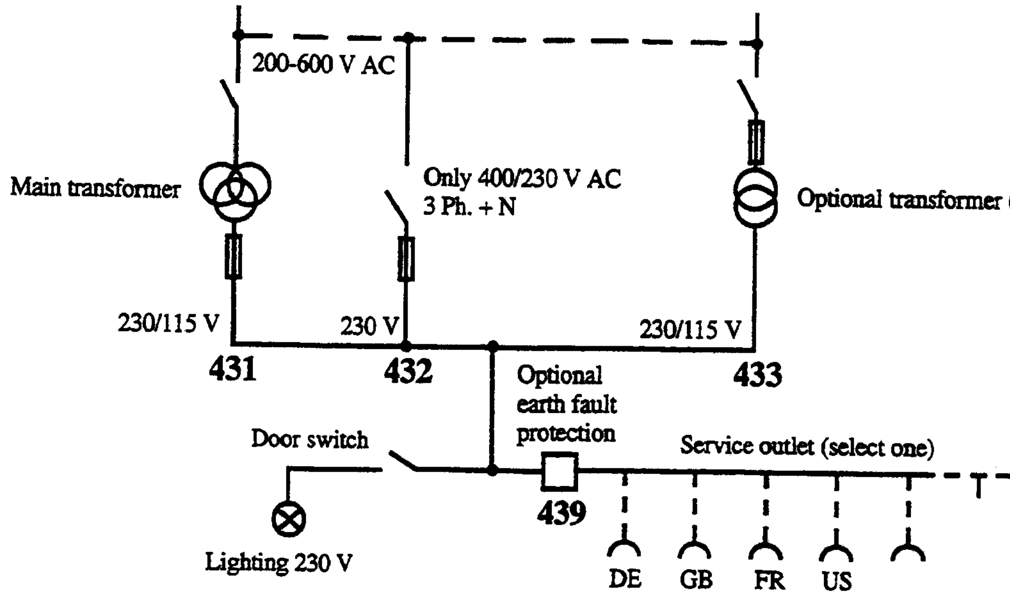

Figure 44 Service outlet and lighting options.

431 Connection from the main transformer.

The voltage is switched on at the mains switch on the front of the cabinet.

432 Connection before mains switch without transformer.
Note this only applies when the mains voltage is 400 V, three-phase with neutral connection and a 230 V service socket.
Cannot be combined with CEE intakes 132, 133, as there is no neutral connection.
Note Connection before mains switch is not in compliance with some national standards, NFPL 79 for example.

433 Connection before mains switch with transformer 400-500 V and with a secondary voltage of 115 V or 230 V, 2A. See Figure 39 for I/O terminal limitations. Occupies two modules.
Note Connection before mains switch is not in compliance with some national standards, NFPL 79 for example.

439 Earth fault protection for service outlet.
To increase personal safety, the service outlet can be supplied with an earth fault protection which trips at 30 mA earth current.The earth fault protection is placed next to the service outlet (see Figure 39).
Voltage range: 110 -240 V AC.

440 COOLING DEVICE

444 Components mounted inside the controller are designed to withstand an ambient temperature of 40° C. To allow ambient temperatures of up to 52° C, installation of externally-powered equipment, or installation of components not designed for the temperature inside the controller (60 - 70° C), extra cooling is required.

Reducing the temperature will increase the lifetime of electronic components. Generally, a 100% increase in the lifetime can be achieved by a 10°C reduction in temperature.

CONTENTS

Safety

1 General

This information on safety covers functions that have to do with the operation of the industrial robot.

The information does not cover how to design, install and operate a complete system, nor does it cover all peripheral equipment, which can influence the safety of the total system.

To protect personnel, the complete system has to be designed and installed in accordance with the safety requirements set forth in the standards and regulations of the country where the robot is installed.

The users of ABB industrial robots are responsible for ensuring that the applicable safety laws and regulations in the country concerned are observed and that the safety devices necessary to protect people working with the robot system have been designed and installed correctly.

People who work with robots must be familiar with the operation and handling of the industrial robot, described in applicable documents, e.g. Users's Guide and Product Manual.

1.1 Introduction

Apart from the built-in safety functions, the robot is also supplied with an interface for the connection of external safety devices.

Via this interface, an external safety function can interact with other machines and peripheral equipment. This means that control signals can act on safety signals received from the peripheral equipment as well as from the robot.

In the Product Manual/*Installation,* instructions are provided for connecting safety devices between the robot and the peripheral equipment.

2 Applicable Safety Standards

The robot is designed in accordance with the requirements of ISO10218, Jan. 1992, Industrial Robot Safety. The robot also fulfils the ANSI/RIA 15.06-1992 stipulations.

3 Fire-Extinguishing

Use CARBON DIOXIDE if the robot (manipulator or controller) should go on fire.

4 Definitions of Safety Functions

Emergency stop – IEC 204-1,10.7

A condition which overrides all other robot controls, removes drive power from robot axis actuators, stops all moving parts and removes power from other dangerous functions controlled by the robot.

Enabling device – ISO 11161, 3.4

A manually operated device which, when continuously activated in one position only, allows hazardous functions but does not initiate them. In any other position, hazardous functions can be stopped safely.

Safety stop – ISO 10218 (EN 775), 6.4.3

When a safety stop circuit is provided, each robot must be delivered with the necessary connections for the safeguards and interlocks associated with this circuit. It is necessary to reset the power to the machine actuators before any robot motion can be initiated. However, if only the power to the machine actuators is reset, this should not suffice to initiate any operation.

Reduced speed – ISO 10218 (EN 775), 3.2.17

A single, selectable velocity provided by the robot supplier which automatically restricts the robot velocity to that specified in order to allow sufficient time for people either to withdraw from the hazardous area or to stop the robot.

Interlock (for safeguarding) – ISO 10218 (EN 775), 3.2.8

A function that interconnects a guard(s) or a device(s) and the robot controller and/or power system of the robot and its associated equipment.

Hold-to-run control – ISO 10218 (EN 775), 3.2.7

A control which only allows movements during its manual actuation and which causes these movements to stop as soon as it is released.

5 Safe Working Procedures

Safe working procedures must be used to prevent injury. No safety device or circuit may be modified, bypassed or changed in any way, at any time.

5.1 Normal operations

All normal operations in automatic mode must be executed from outside the safe-guarded space.

6 Programming, Testing and Servicing

The robot is extremely heavy and powerful, even at low speed. When entering into the robot's safeguarded space, the applicable safety regulations of the country concerned must be observed.

Operators must be aware of the fact that the robot can make unexpected movements. A pause (stop) in a pattern of movements may be followed by a movement at high speed. Operators must also be aware of the fact that external signals can affect robot programs in such a way that a certain pattern of movement changes without warning.

If work must be carried out within the robot's work envelope, the following must be observed:

- The key-operated switch on the controller must be in the manual mode position to render the enabling device operative and to block operation from a computer link or remote control panel.
- The robot's speed is limited to max. 250 mm/s (10 inches/s) when the key-operated switch is in position < 250 mm/s. This should be the normal position when entering the working space. The position 100% – full speed – may only be used by trained personnel who are aware of the risks that this entails.
- During programming and testing, the enabling device must be released as soon as there is no need for the robot to move.

The enabling device must never be rendered inoperative in any way.

- The programmer must always take the teach pendant with him/her when entering through the safety gate to the robot's working space so that no-one else can take over control of the robot without his/her knowledge.

7 Safety Functions

7.1 The safety control chain of operation

The safety control chain of operation is based on dual electrical safety chains which interact with the robot computer and enable the MOTORS ON mode.

The electrical safety chains consist of several switches connected in series, in such a way that all of them must be closed before the robot can be set to MOTORS ON mode. MOTORS ON mode means that drive power is supplied to the motors.

The electrical safety chains are continuously monitored and the robot reverts to the MOTORS OFF mode when a fault is detected by the computer. MOTORS OFF mode means that drive power is removed from the robot's motors and the brakes are applied.

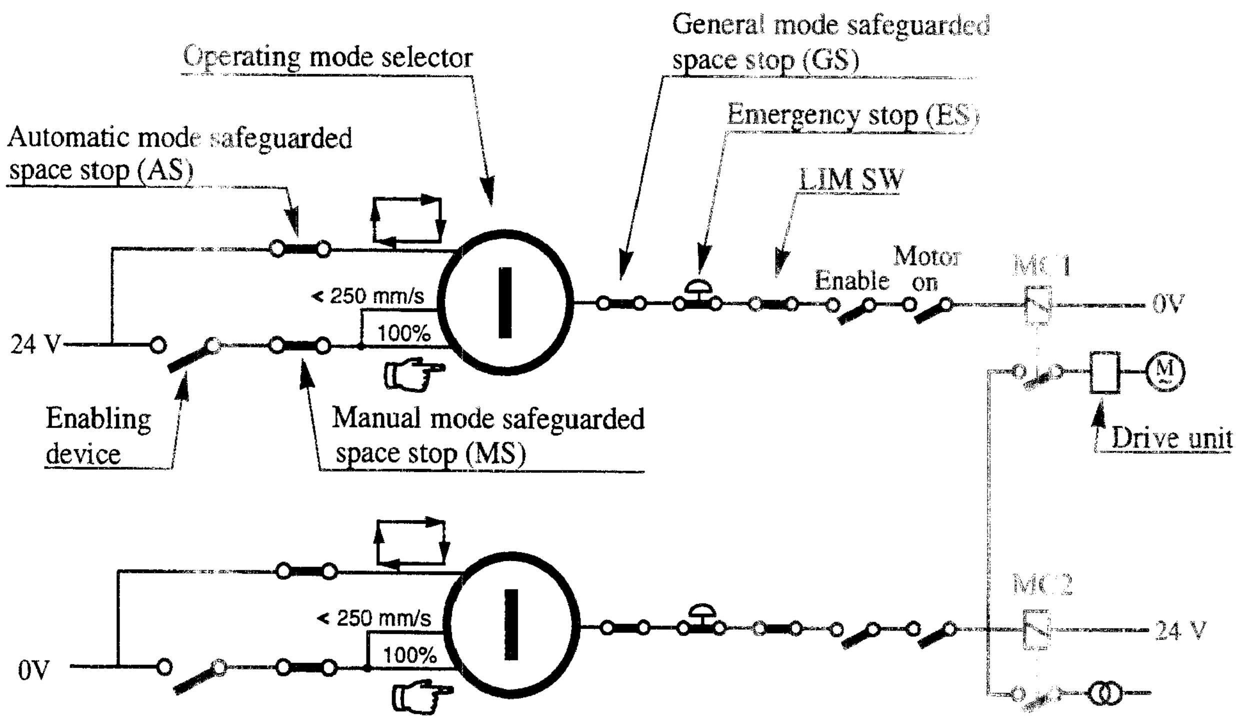

The positions of the switches are indicated by the LEDs on the front of the system board in the control cabinet.

If any contact in the safety chain of operation is open, the robot always reverts to MOTORS OFF mode.

After a stop, the switch must be reset at the unit which caused the stop before the robot can be ordered to start again.

The safety chains must never be bypassed, modified or changed in any other way.

7.2 Emergency stops

An emergency stop should be activated if there is a danger to people or equipment. Built-in emergency stop buttons are located on the operator's panel of the robot controller and on the teach pendant.

External emergency stop devices (buttons, etc.) can be connected to the safety chain by the user (see Product Manual/*Installation*). They must be connected in accordance with the applicable standards for emergency stop circuits.

Before commissioning the robot, all emergency stop buttons or other safety equipment must be checked by the user to ensure their proper operation.

Before switching to MOTORS ON mode again, establish the reason for the stop and rectify the fault.

7.3 Mode selection using the key-switch

The applicable safety requirements for using robots, laid down in accordance with ISO/DIS 10218, are characterised by different modes, selected by means of control devices and with clear-cut positions.

One automatic and two manual modes are available:

Manual mode:
< 250 mm/s - max. speed is 250mm/s (MANUAL REDUCED SPEED)
100% - full speed (MANUAL FULL SPEED)

Automatic mode: The robot can be operated via a remote control device

The manual mode, < 250 mm/s or 100%, must be selected whenever anyone enters the robot's safeguarded space. The robot must be operated using the teach pendant and, if 100% is selected, using Hold-to-run control.

In automatic mode, the key-switch is switched to , and all safety arrangements, such as doors, gates, light curtains, light beams and sensitive mats, etc., are active. No-one may enter the robot's safeguarded space. All controls, such as emergency stops, the control panel and control cabinet, must be easily accessible from outside the safeguarded space.

Programming and testing at reduced speed

Robot movements at reduced speed can be carried out as follows:

- Set the operating mode selector to < 250 mm/s
- Programs can only be started using the teach pendant with the enabling device activated.

The automatic mode safeguarded space stop (AS) function is not active in this mode.

Testing at full speed

Robot movements at programmed speed can be carried out as follows:

- Set the operating mode selector to 100%
- Programs can only be started using the teach pendant with the enabling device activated.

For "Hold-to-run control", the program start key must be activated. Releasing the key stops program execution.

The 100% mode may only be used by trained personnel. The applicable laws and regulations of the countries where the robot is used must always be observed.

Automatic operation

Automatic operation may start when the following conditions are fulfilled:

- The key-switch is set to
- The MOTORS ON mode is selected

Either the teach pendant can be used to start the program or a connected remote control device. These functions should be wired and interlocked in accordance with the applicable safety instructions and the operator must always be outside the safeguarded space.

7.4 Enabling device

When the operating mode selector is in the MANUAL REDUCED SPEED or MANUAL FULL SPEED position, the robot can be set to the MOTORS ON mode by depressing the enabling device on the teach pendant.

Should the robot revert to the MOTORS OFF mode for any reason while the enabling device is depressed, the latter must be released before the robot can be returned to the MOTORS ON mode again. This is a safety function designed to prevent the enabling device from being rendered inactive.

When the enabling device is released, the drive power to the motors is switched off, the brakes are applied and the robot reverts to the MOTORS OFF mode.

If the enabling device is reactivated, the robot changes to the MOTORS ON mode.

7.5 Hold-to-run control

This function is active when the operating mode selector is in the MANUAL FULL SPEED position.

When Hold-to-run control is active, the enabling device and the start key on the teach pendant must be depressed in order to execute a program. When the key is released, the axis (axes) movements stop and the robot remains in the MOTORS ON mode. When the key is pressed in again, program execution continues.

7.6 General Mode Safeguarded Stop (GS) connection

The GS connection is provided for interlocking external safety devices, such as light curtains, light beams or sensitive mats. The GS is active regardless of the position of the operating mode selector.

When this connection is open the robot changes to the MOTORS OFF mode. To reset to MOTORS ON mode, the device that initiated the safety stop must be interlocked in accordance with applicable safety regulations. This is not normally done by resetting the device itself.

7.7 Automatic Mode Safeguarded Stop (AS) connection

The AS connection is provided for interlocking external safety devices, such as light curtains, light beams or sensitive mats used externally by the system builder. The AS is especially intended for use in automatic mode, during normal program execution.

The AS is disconnected when the operating mode selector is in the MANUAL or MANUAL FULL SPEED position.

7.8 Manual Mode Safeguarded Stop (MS) Connection

The MS connection is provided for interlocking external safety devices, such as light curtains, light beams or sensitive mats used externally by the system builder. The MS is especially intended for use with additional enabling devices.

7.9 Limiting the working space

For certain applications, movement about the robot's main axes must be limited in order to create a sufficiently large safety zone. This will reduce the risk of damage to the robot if it collides with external safety arrangements, such as barriers, etc.

Movement about axes 1 and 2 can be limited with adjustable mechanical stops, and by means of electrical limit switches or mechanical stops about axis 3. If the working space is limited by means of stops or switches, the corresponding software limitation parameters must also be changed. If necessary, movement about the three wrist axes can also be limited by the computer software. Limitation of movement about the axes must be carried out by the user.

7.10 Supplementary functions

Functions via specific digital inputs:

- A stop can be activated via a connection with a digital input. Digital inputs can be used to stop programs if, for example, a fault occurs in the peripheral equipment.

Functions via specific digital outputs:

- ERROR – indicates a fault in the robot system.
- CYCLE ON – indicates that the robot is executing a program.
- MOTORS ON – indicates that the robot is in MOTORS ON mode.

8 Safety Risks Related to End Effectors

8.1 Gripper

If a gripper is used to hold a workpiece, inadvertent loosening of the workpiece must be prevented.

8.2 Tools/workpieces

It must be possible to turn off tools, such as mill cutters, etc., safely. Make sure that guards remain closed until the cutters stop rotating.

Grippers must be designed so that they retain workpieces if ever there is a power failure or a disturbance of the controller. It should be possible to release parts by manual operation (valves).

8.3 Pneumatic/hydraulic systems

Special safety regulations apply to pneumatic and hydraulic systems.

Residual energy may be present in these systems so, after shutdown, particular care must be taken.

The pressure in pneumatic and hydraulic systems must be released before starting to repair them. Gravity may cause any parts or objects held by these systems to drop. Dump valves should be used in case of emergency. Shot bolts should be used to prevent tools, etc., from falling due to gravity.

9 Risks during Operation Disturbances

If the working process is interrupted, extra care must be taken due to risks other than those associated with regular operation. Such an interruption may have to be rectified manually.

Remedial action must only ever be carried out by trained personnel who are familiar with the entire installation as well as the special risks associated with its different parts.

The industrial robot is a flexible tool which can be used in many different industrial applications. All work must be carried out professionally and in accordance with applicable safety regulations. Care must be taken at all times.

10 Risks during Installation and Service

To prevent injuries and damage during the installation of the robot system, the regulations applicable in the country concerned and the instructions of ABB Robotics must be complied with. Special attention must be paid to the following points:

- The supplier of the complete system must ensure that all circuits used in the safety function are interlocked in accordance with the applicable standards for that function.
- The instructions in the Product Manual/*Installation* must always be followed.
- The mains supply to the robot must be connected in such a way that it can be turned off outside the robot's working space.
- The supplier of the complete system must ensure that all circuits used in the emergency stop function are interlocked in a safe manner, in accordance with the applicable standards for the emergency stop function.
- Emergency stop buttons must be positioned in easily accessible places so that the robot can be stopped quickly.
- Safety zones, which have to be crossed before admittance, must be set up in front of the robot's working space. Light beams or sensitive mats are suitable devices.
- Turntables or the like should be used to keep the operator away from the robot's working space.
- Those in charge of operations must make sure that safety instructions are available for the installation in question.
- Those who install the robot must have the appropriate training for the robot system in question and in any safety matters associated with it.

Although troubleshooting may, on occasion, have to be carried out while the power supply is turned on, the robot must be turned off (by setting the mains switch to OFF) when repairing faults, disconnecting electric leads and disconnecting or connecting units.

Even if the power supply for the robot is turned off, you can still injure yourself.

- The axes are affected by the force of gravity when the brakes are released. In addition to the risk of being hit by moving robot parts, you run the risk of being crushed by the tie rod.
- Energy, stored in the robot for the purpose of counterbalancing certain axes, may be released if the robot, or parts thereof, is dismantled.
- When dismantling/assembling mechanical units, watch out for falling objects.

11 Risks Associated with Live Parts

Controller

A danger of high voltage is associated with the following parts:

- The mains supply/mains switch
- The power unit
- The power supply unit for the computer system (220 V AC)

- The rectifier unit (240 V AC and 340 V DC. NB: Capacitors!)
- The drive unit (340 V DC)
- The service outlets (110/220 VAC)
- The power supply unit for tools, or special power supply units for the machining process
- The external voltage connected to the control cabinet remains live even when the robot is disconnected from the mains.
- Additional connections

Manipulator

A danger of high voltage is associated with the manipulator in:

- The power supply for the motors (up to 340 V DC)
- The user connections for tools or other parts of the installation (see *Installation*, max. 220 V AC)

Tools, material handling devices, etc.

Tools, material handling devices, etc., may be live even if the robot system is in the OFF position. Power supply cables which are in motion during the working process may be damaged.

12 Limitation of Liability

The above information regarding safety must not be construed as a warranty by ABB Robotics that the industrial robot will not cause injury or damage even if all safety instructions have been complied with.

13 Related Information

	Described in:
Installation of safety devices	Product Manual - *Installation and Commissioning*
Changing robot modes	General - *Operator's Panel*
Limiting the working space	User's Guide- *System Parameters* Product Manual - *Installation and Commissioning*
Digital system signals	User's Guide- *System Parameters*

Rev ind	Revision	Appd	Year	Week
1	prEN 50081-2, 082-2	OS	94	43

Declaration by the manufacturer
as defined by machinery directive 89/392/EEC Annex II B

Herewith we declare that the industrial robot

☐ IRB 1400 ☐ IRB 2000 ☐ IRB 2400 ☐ IRB 3000

☐ IRB 3400 ☐ IRB 4400 ☐ IRB 6000 ☐ IRB 6400

manufactered by the ABB Robotics Products AB
with manufacturing No.

is intend... e
machin... o
which...

To the User

"Declaration by the manufacturer".

On delivery, the complete document is placed in the control system

EN 292-1	Safety of machinery, basic terminology
EN 292-2	Safety of machinery, technical principles/specifications, emergency stop
EN 418	Safety of machinery, emergency stop equipment
EN 457	Safety of machinery, auditory danger signals
EN 563	Safety of machinery, temperatures of surfaces
EN 614-1	Safety of machiney, ergonomic design principles
EN 775	Robot safety
EN 60204	Electrical equipment for industrial machines (=IEC 204-1 with European modifications)
prEN 574	Safety of machinery, two-hand control device
prEN 953	Safety of machinery, fixed / moveable guards
prEN 954	Safety of machinery, safety related parts of the control system
prEN 50081-2	EMC, generic emission
prEN 50082-2	EMC, generic immunity
IEC 529	Degrees of protection provided by enclosures
IEC 255	Electrical relays
IEC 801-2	Electromagnetic compatibility for industrial process measurement and control equipment Electrostatic discharge requirements
IEC 801-3	Electromagnetic compatibility for industrial process measurement and control equipment Radiated electromagnetic field requirement
IEC 801-4	Electromagnetic compatibility for industrial process measurement and control equipment Electric phase transient/burst requriment

Prepared Ola Svanström 94-08-30	Responsible department SEROP/K	Title Declaration by the manufacturer	
Approved K-G Ramström	Take over department	Tillverkardeklaration	Language Sv
		Document No	Of 1
ABB Robotics		3HAB 3585-1	Sheet 1

ABB ROBOTICS PRODUCTS AB **CONFIGURATION LIST**

Robot type: Revision: Manufact order no: Serial no:

For RAC: RAC Ref no: Sales order no:

Tested and approved: Date Name

MANIPULATOR:

CONTROL

ROBOT SY

Delivery fro

Delivery to c

To the User

The Configuration List is an individual specification of the robot system delivered regarding configuration and extent.

On delivery, the complete document is placed in the robot control system.

Acceptance by customer: ______________________________

Customer information: ______________________________

Customer:

Address:

OPTIONS/DOCUMENTATION

QTY	OPTION/PARTNO	REVISION	DESCRIPTION

CONTENTS

CONTENTS

Page

1 Structure

The robot is made up of two main parts, as illustrated in Figure 1.

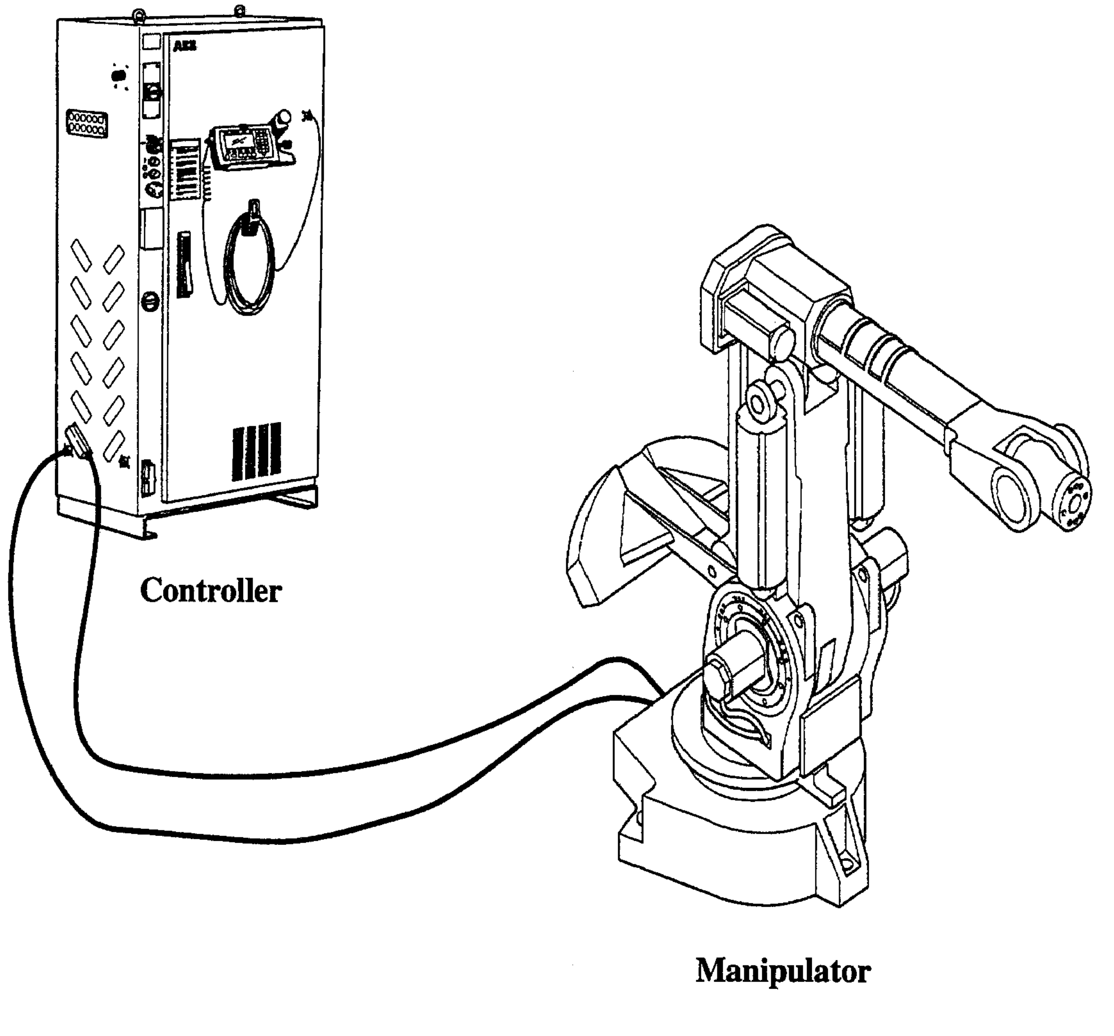

Figure 1 The complete IRB 6400 robot with its two main parts.

1.1 Manipulator

It is equipped with maintenance-free, alternating-current motors which have built-in electromechanical brakes. The brakes lock the motors when the robot is inoperative for more than 3 minutes. All cabling, including the air supply, is installed inside the manipulator.

The following diagram shows the various ways in which the manipulator moves and its component parts.

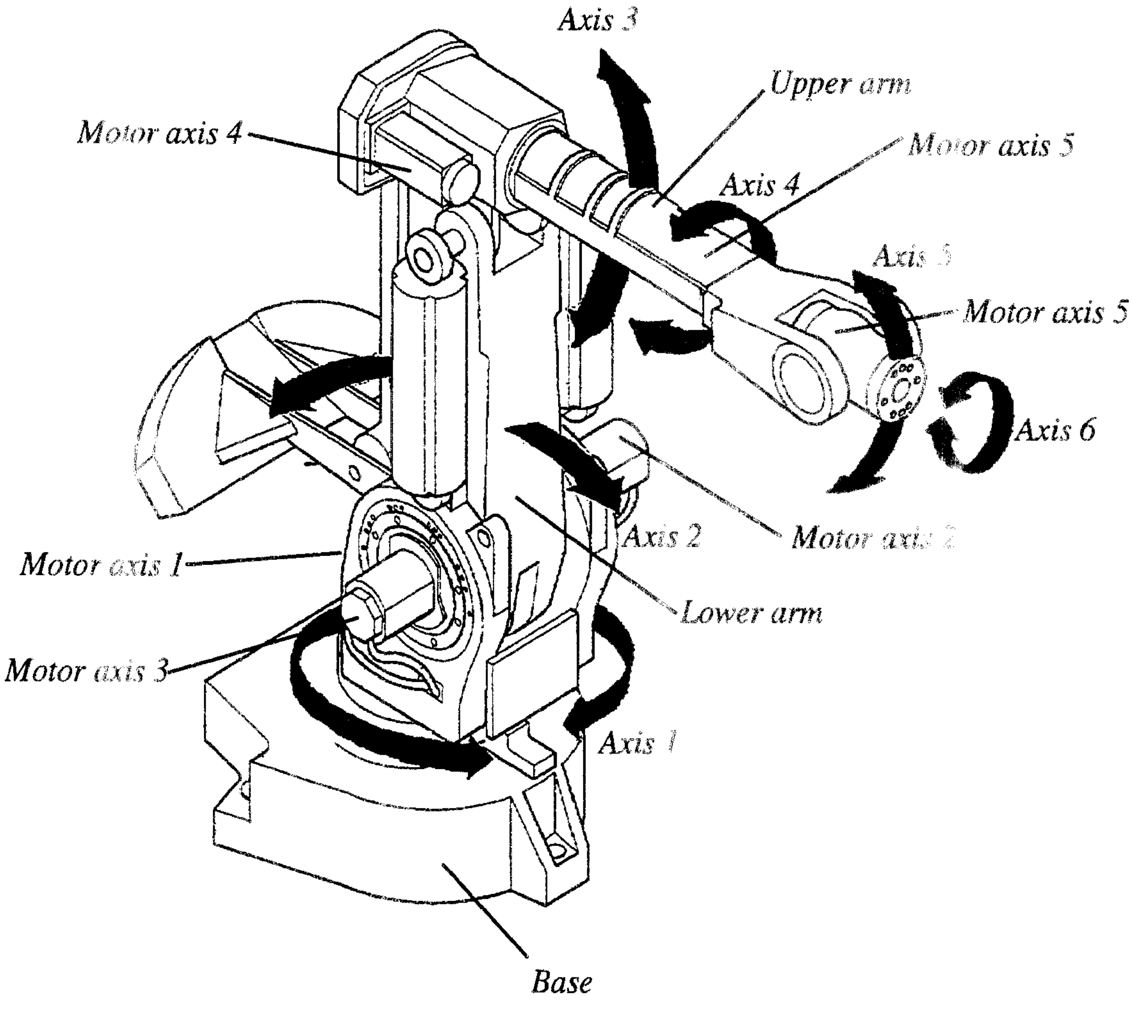

Figure 2 The motion patterns of the manipulator.

1.2 Controller

The controller, which contains the electronics used to control the manipulator and peripheral equipment, is specifically designed for robot control, and consequently provides optimal performance and functionality.

Figure 3 shows the location of the various components in the cabinet.

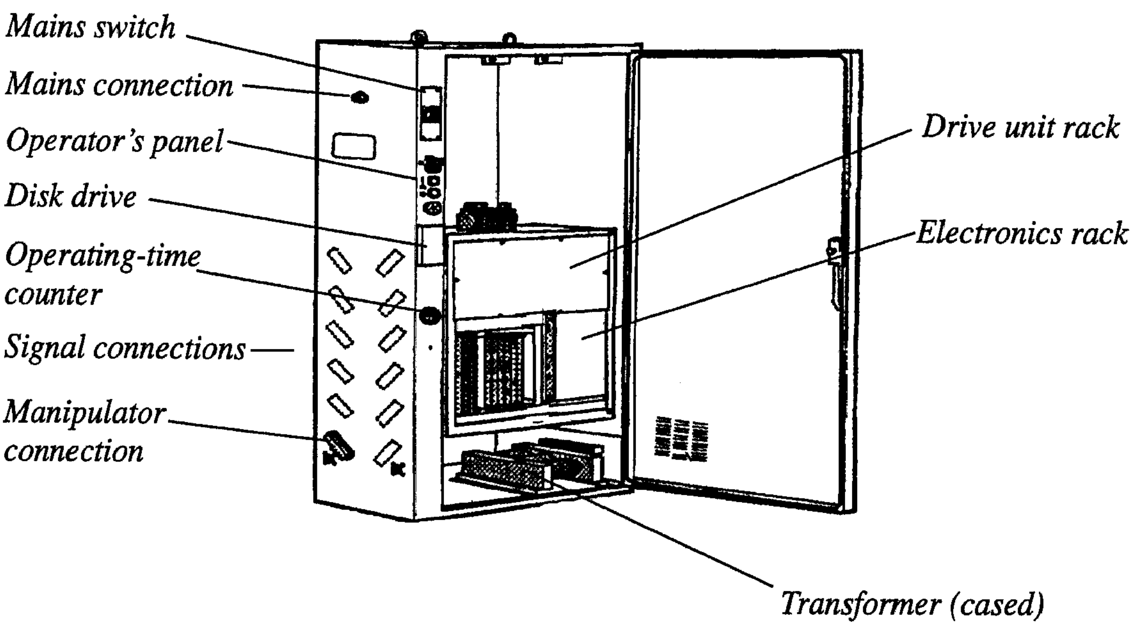

Figure 3 The inside of the cabinet showing the location of the various units.

1.3 Electronics unit

All control and supervisory electronics, apart from the serial measuring board which is located inside the robot, are gathered together on hinged racks.

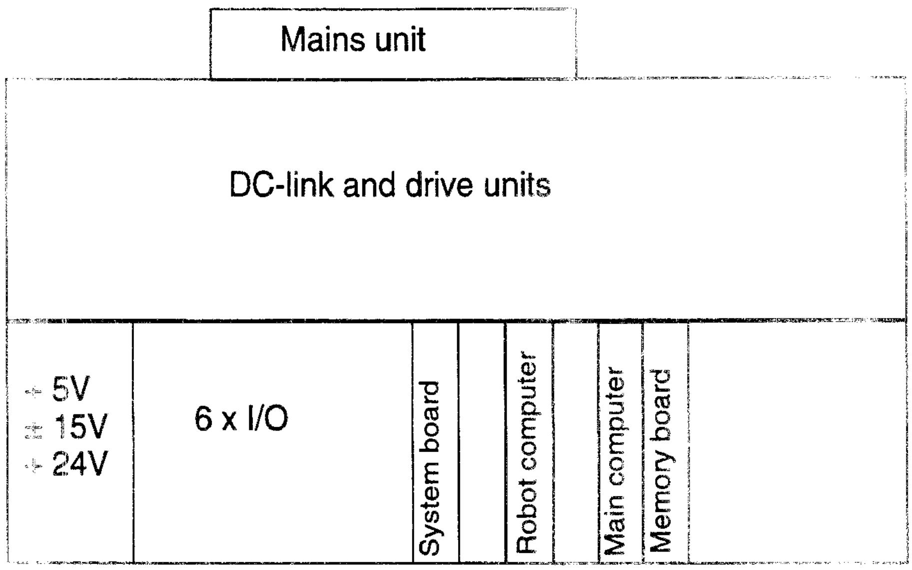

Figure 4 The location of the electronics boards.

The electronics unit comprises the following parts:

- Main computer board –
  contains the main computer of the robot which controls the entire robot system and part of the RAM memory.
- Robot computer board –
  contains computers used to control the manipulator and I/O communication.
- Memory board –
  contains extra RAM-memory, there are four sizes, 4, 6, 8 and 16 Mb.
- Lithium batteries for memory back-up.
- System board –
  gathers and coordinates all signals that affect operational and personal safety.
- I/O boards –
  enables communication with external equipment by means of 24 V digital inputs and outputs or analog inputs and outputs.
- Supply unit–
  4 regulated and short-circuit-protected output voltages all at 0 V
- Drive unit –
  regulates the torque of the robot motors.
- DC-link–
  converts a three-phase, alternating current to a direct current.
- Serial measuring board (in the manipulator) –
  gathers resolver data and transfers it to the robot computer board. The serial measurement board is battery-backed in order for the revolution information not to be lost if there is a power failure.

2 Computer System

The computer system is made up of three computers, with two circuit boards. The computers comprise:

- Main computer board –
  contains the *main computer* of the robot and controls the entire robot (Motorola 68040).
- Robot computer board –
  contains the *I/O computer* which acts as a link between the main computer, the world around and the *axis computer* that regulates the velocity of the robot axes.

To find out where the various boards are located, see the section on Structure.

The computers are the data processing centre of the robot. They possess all functions required to create, execute and store a robot program. They also contain functions for coordinating and regulating the axis movements. Figure 5 shows how the computer system communicates with the other units.

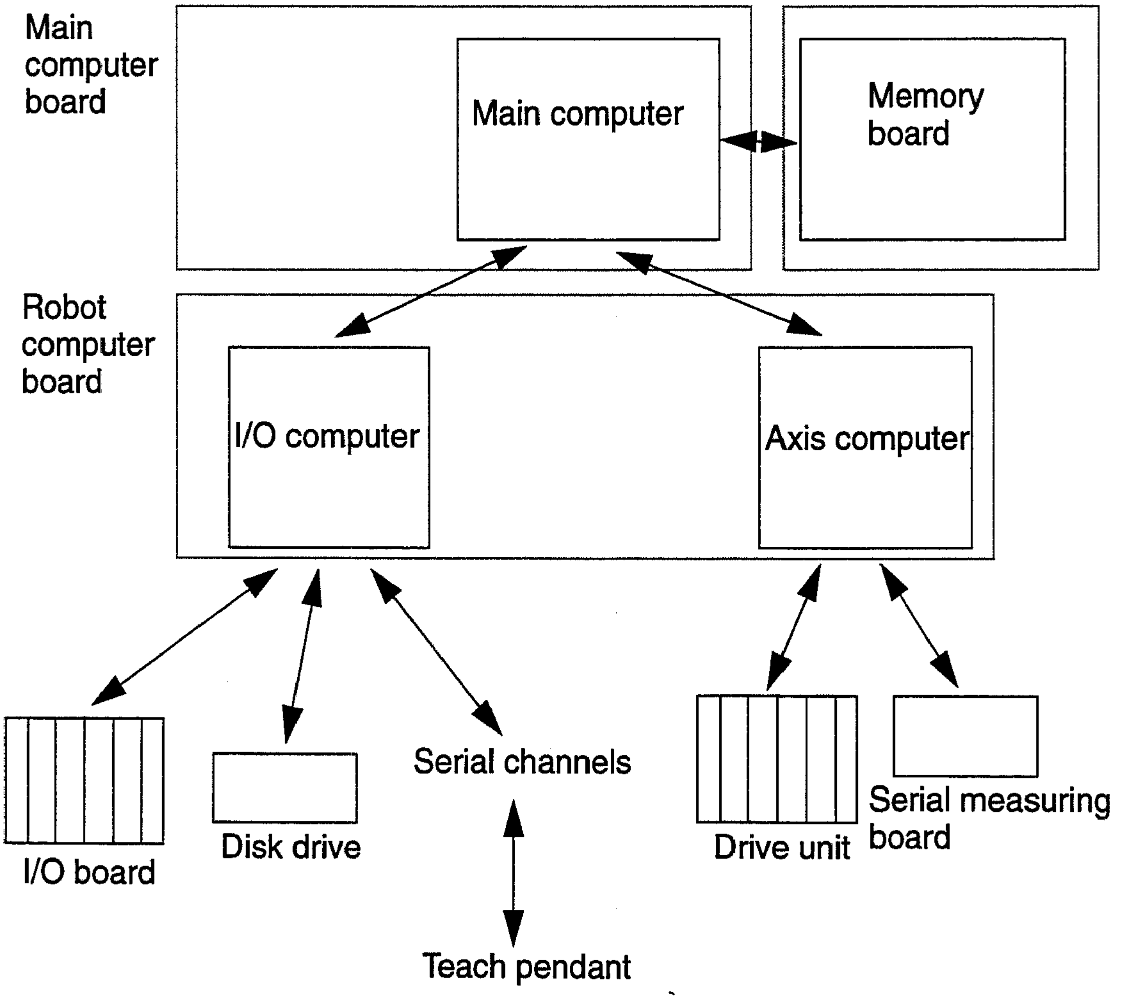

Figure 5 The interfaces of the computer system.

3 Servo System

3.1 Principle function

The servo system is a complex system comprising several different interacting units and system parts – both hardware and software. The servo function comprises:

- Digital regulation of the poses and velocity of the robot axes.
- Synchronous AC operation of the robot motors.

3.2 Regulation

During execution, new data on the poses of the robot axes is continuously received from the serial measuring board. This data is input into the position regulator and then compared with previous position data. After it has been compared and amplified, new references are given for the pose and velocity of the robot.

The system also contains a model of the robot which continuously calculates the optimal regulator parameters for the gravitation, the moment of inertia and the interaction between axes. See Figure 6 on the next page.

3.3 Controlling the robot

An alternating current reference for two phases is calculated on the basis of the resolver signal and a known relationship between the resolver angle and rotor angle. The third phase is created from the other two.

The current of the phases is regulated in the drive unit in separate current regulators. In this way, three voltage references are returned which, by pulse-modulating the rectifier voltage, are amplified to the working voltage of the motors.

The serial measuring board receives resolver data from a maximum of six resolvers and generates information on the position of the resolvers.

The following diagrams outline the system structure for AC operation as well as the fundamental structure of the drive unit.

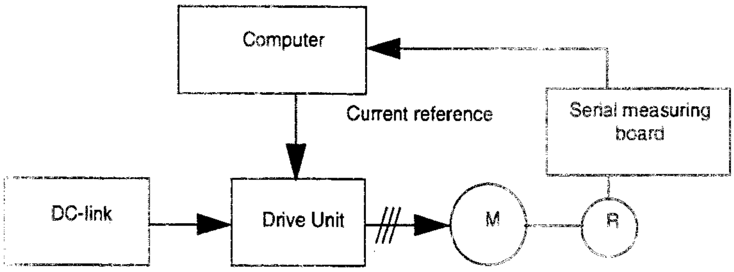

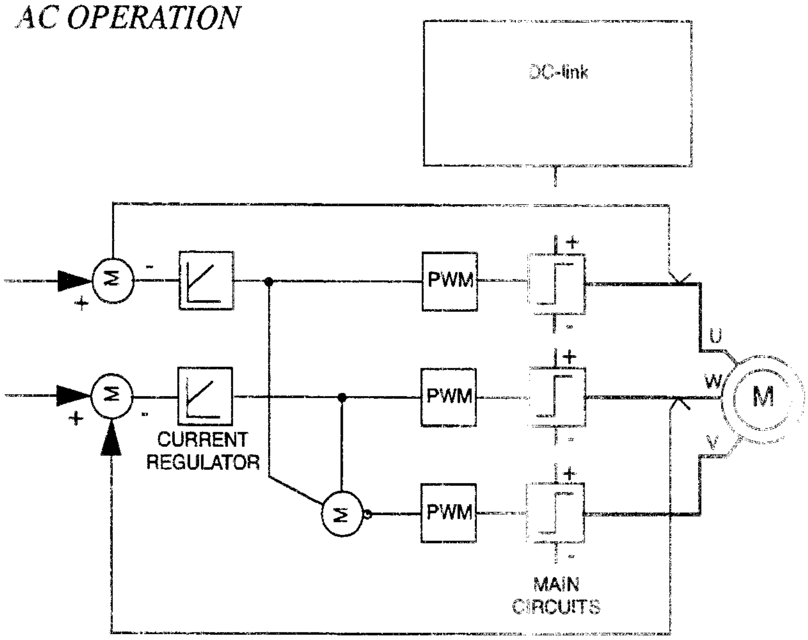

Figure 6 System structure for AC operation.

3.4 Overload protection

PTC resistance is built into the robot motors to provide thermic protection against overloads. The PTC sensor are led into the system board to inputs sensitive to resistance level, which check that low resistance is maintained.

The robot computer checks the motors for overloading at regular intervals by reading the system board register. In the event of an overload, the motors switch off.

6.2 External drive units

When using external drive units, an external axis board, DSQC 233, is mounted in the cabinet. This board takes care of signal communication with up to 6 external axes (see Figure 11).

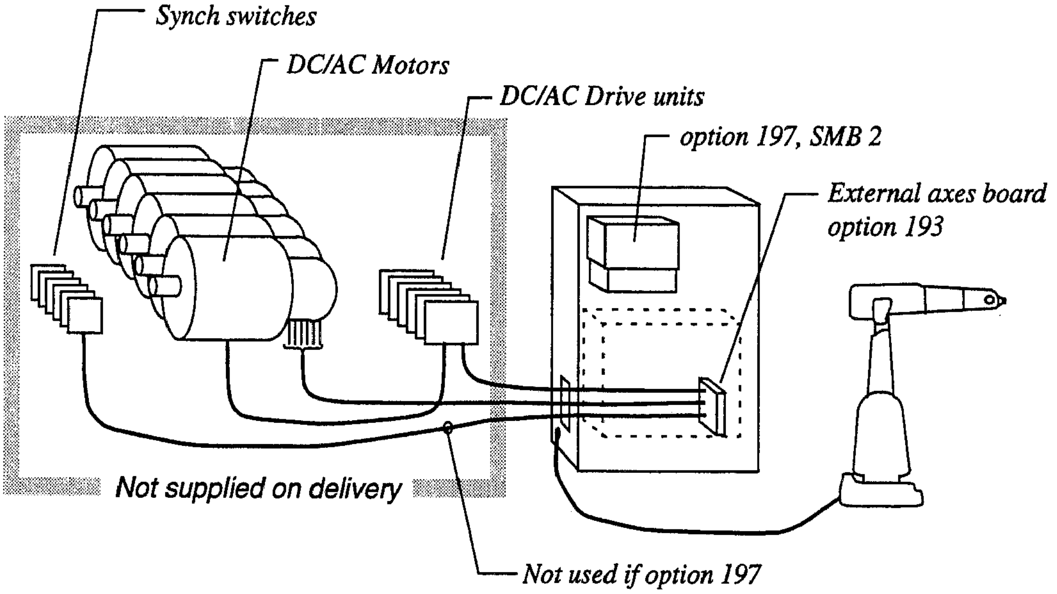

Figure 11 External axes with external drive units.

These axes are measured relatively and use sync. switches for synchronization.

6 External Axes

An external axis can be controlled by either an internal or external drive unit.

6.1 Internal drive units

One (or more) AC motor(s) is controlled by an internal drive unit mounted in the cabinet (maximum one drive unit). Extra external axes boards are not necessary (see Figure 10).

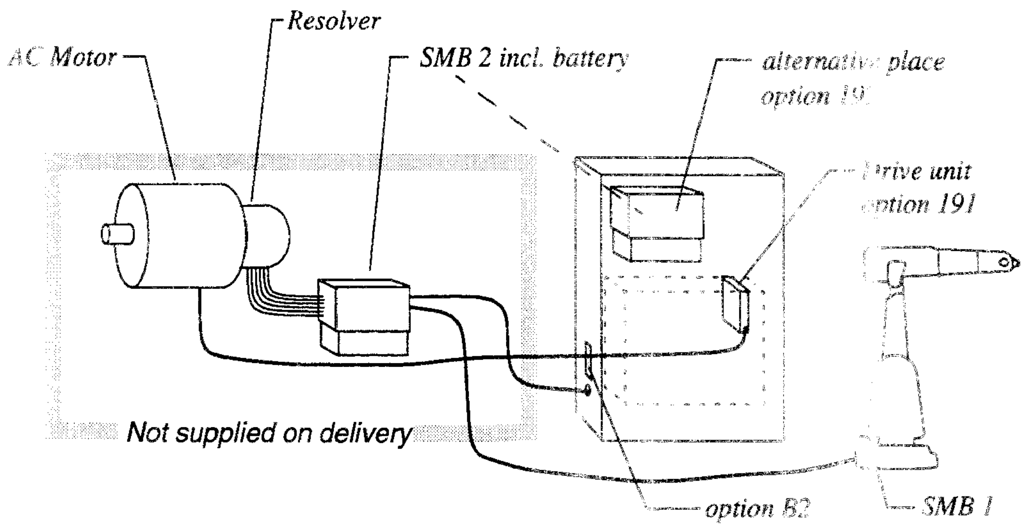

Figure 10 External axes with an internal drive unit

These axes are measured absolutely.

5.6 24 V I/O safety supervision

If the 24 V I/O supply drops out, the chain of operation sends an interrupt signal to the robot computer and the MOTOR ON contactors drop out, causing the motors to switch off.

5.7 Monitoring

Monitoring is carried out using both hardware and software, and comprises the external part of the chains of operation, including switches and operating contacts. The hardware and software parts operate independently of each other.

The following errors may be detected:

All stages in the chain of operation are linked to registers, which allows the robot computer to monitor the status. If an interrupt occurs in the chain of operation, the status before the interrupt can be read, but the status after the interrupt cannot be read – unless the cause of the interrupt has been corrected. The status of the enabling device can, however, always be read – irrespective of the status of the remainder of the chain.

Usually, monitoring the chain of operation 1 covers all interrupts, since all switches are connected in such a way that both chains are interrupted at the same time. If any of the switch functions are incorrectly adjusted, causing only one of the chains of operation to be interrupted, the robot computer will detect this, since when an operating contact drops out, the LED in the MOTORS ON switch stops glowing and the MOTORS OFF LED starts to glow dimly. The "ERR" LED on the front of the system board will glow red.

If an error occurs, the MOTORS OFF switch is activated.

Category 1 is to be preferred if accepted for safety analysis purposes, such as when gates are used to protect against entry into the work cell. This controlled motion stop takes place within the programmed path, which makes restarting easier.

In S4 control systems, all safety stops are category 0 stops.
Safety stops of category 1 can be obtained by using the functions HOLD 1 and HOLD 2 together with AS or GS.

5.3.1 Safety stops (smooth stops)

When HOLD 1 and HOLD 2 are connected to a closed input contact and supplied with 24 V, the signal PROG STOP will be sent when the contact opens and, shortly after this, the two relay contacts will open. These relay contacts can be connected to either of the switch positions, MOTORS ON/OFF. AS or GS are to be used if possible (see Figure 9).

Note! Gate operated contacts should be kept open for more than 1.5 sec. to ensure MOTOR OFF condition.

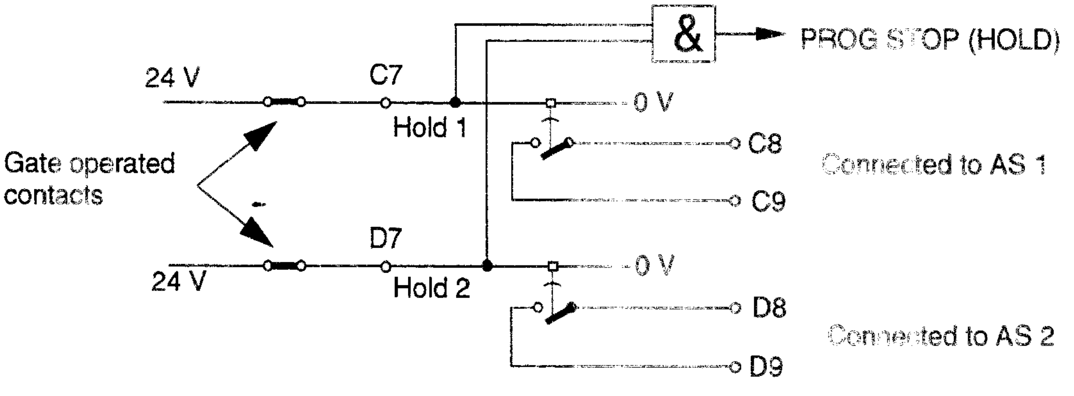

Figure 9 Diagram of a smooth stop.

5.4 Limitation of velocity

To program the system, the operating mode switch must be turned to either MANUAL or MANUAL FULL SPEED position. In MANUAL mode, the robot's maximum velocity is limited to 250 mm/s. This is done by monitoring the software of the main computer and by sending a signal directly from the system board to the axis computer.

5.5 ENABLE

ENABLE is a 24 V signal, generated in the supply unit. The signal is sent through the robot computer, to the system board.

The errors that affect the Enable signal are:

- In the supply unit; errors in the input or output voltages
- In the robot computer; errors in the diagnostics or servo control program.
- In the drive unit; regulating errors and over-current.

If any of the dual switches in the chain of operation are opened, the chain breaks and the operating contactors drop out, which stops the robot. If the chain of operation breaks, an interrupt call is sent directly from the system board to the robot computer to ensure that the cause of the interrupt is indicated.

When the manipulator is stopped by a limit switch, the robot can be moved from this position by jogging it with the joystick and pressing the MOTORS ON button at the same time. The MOTORS ON button is monitored and may be depressed for a maximum of 30 seconds.

A number of LEDs are connected to the chains of operation to enable quick location of the position where the safety chain is broken. The LEDs are located on the front of the system board. Only the chain of operation 1 has an LED for each switch in the chain. The chain of operation 2 is indicated after the last switch. If only one of the parallel switches in the chain of operation is broken during operation, the "ERR" LED, on the front of the system board, glows red.

5.2 MOTORS ON and MOTORS OFF modes

The principle task of the chain of operation is to ensure that the robot goes into MOTOR OFF mode as soon as any part of the chain is broken. The robot computer checks the last switches (ENABLE and MOTORS ON) in the chains of operation itself.

In AUTO operating mode, you can switch the robot back on by pressing the MOTORS ON button on the operator's panel. If the chain is OK, the robot computer then closes the MOTORS ON relay to complete the chain. When the MOTORS OFF button is pressed, the mode changes to MOTORS OFF, at which stage the robot computer opens the MOTORS ON relay. If the robot mode does not then change to the MOTORS OFF, the ENABLE chain will break to enable the ENABLE relay to be opened. The chain of operation can thus be broken in two places by the robot computer.

In MANUAL and MANUAL FULL SPEED operating modes, you can start operating again by pressing the enabling device on the teach pendant. If the chain is OK, the robot computer then closes the MOTORS ON relay to complete the chain. It is always possible to read the status of the enabling device – regardless of the status of the chain – since it is located first in the chain. The function of the chain of operation can thus be described as a combination of mechanical switches and robot-computer-controlled relays which are all continuously monitored by the robot computer.

5.3 Safety stop signals

According to the safety standard ISO/DIS 11161 "Industrial automation systems - safety of integrated manufacturing systems - Basic requirements", there are two categories of safety stops, category 0 and category 1, see below:

The category 0 stop is to be used when, for safety analysis purposes, the power supply to the motors must be switched off immediately, such as when a light curtain, used to protect against entry into the work cell, is passed. This uncontrolled motion stop may require special restart routines if the programmed path changes as a result of the stop.

5 Safety System

The robot's safety system is based on a two-channel safety circuit that is continuously monitored. If an error is detected, the power supply to the motors switches off and the brakes engage. To return the robot to MOTORS ON mode, the two identical chains of switches must be closed. As long as these two chains differ, the robot will remain in the MOTORS OFF mode.

Figure 8 below illustrates a circuit with available customer contacts.

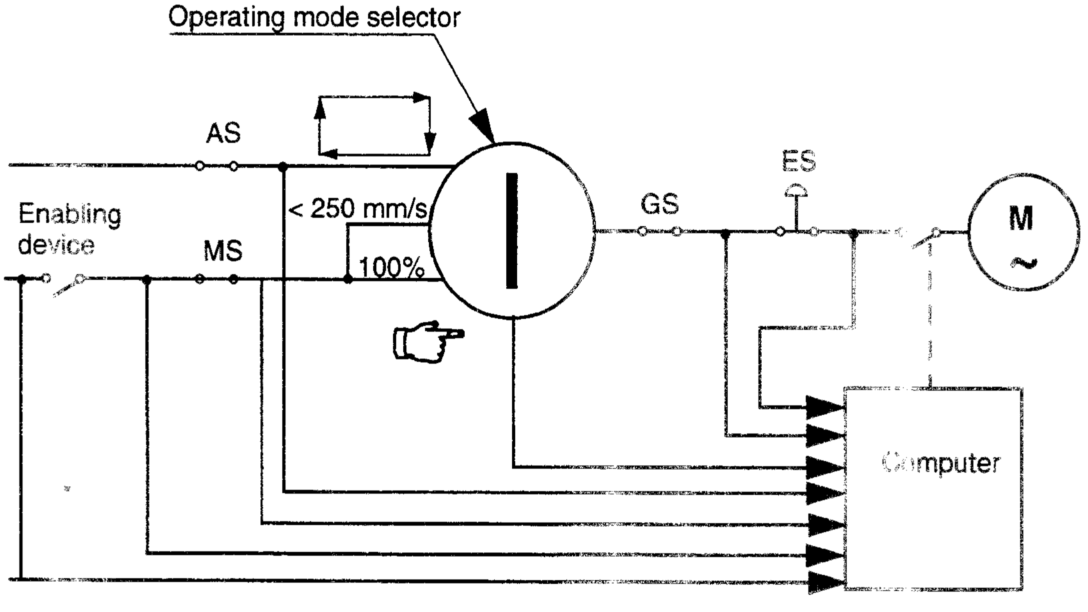

AS = Automatic mode safeguard Stop
MS = Manual mode safeguard Stop
GS = General mode safeguard Stop
ES = Emergency Stop

Figure 8 Outline diagram of one of the safety circuits.

5.1 The chain of operation

The emergency stop buttons on the operator's panel and on the teach pendant and external emergency stop buttons are included in the two-channel chain of operation.

A working stop, active in the AUTO operating mode, can be connected by the user. In MANUAL REDUCED SPEED and MANUAL FULL SPEED modes, the enabling device on the teach pendant is connected. The user can also connect an extra enabling device or other circuits.

The safeguard stop GENERAL STOP is active in all operating modes and is connected by the user.

The aim of these safeguarded stop functions is to make the area around the manipulator safe while still being able to access it for maintenance and programming.

4 I/O System

Communicates with other equipment using digital and analog input and output signals.

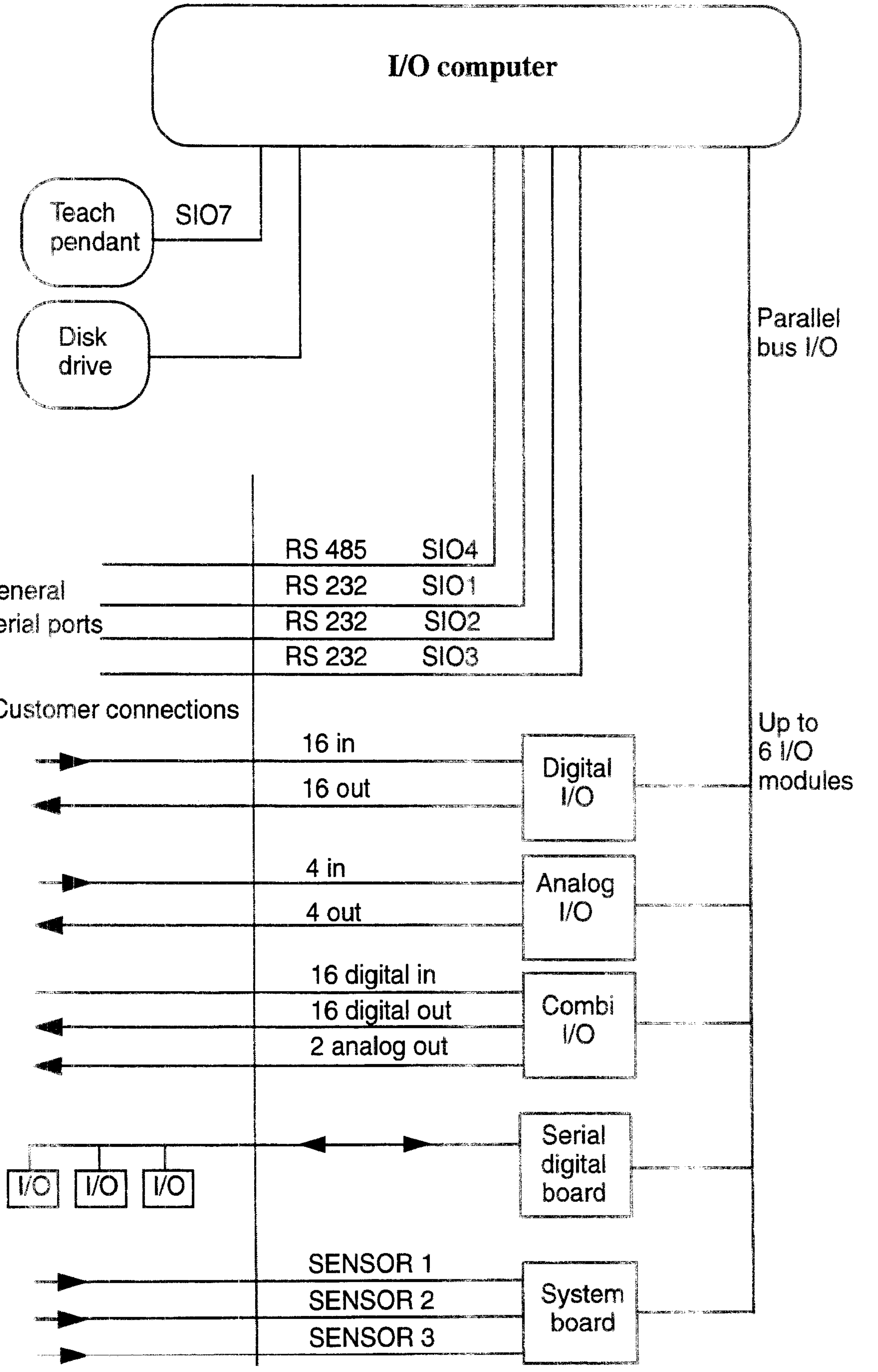

Figure 7 Overview of the I/O system.

CONTENTS

CONTENTS

Page

CONTENTS

1 Transporting and Unpacking

NB:
Before starting to unpack and install the robot, read the safety regulations and other instructions very carefully. These are found in a separate sections in the User's Guide and Product manual.

When you have unpacked the robot, check that it has not been damaged during transport or while unpacking.

Note Save the transport security device for the pivoting framework in the cabinet for later use.

Operating conditions:

Ambient temperature	+5° to + 50° C (manipulator), +5° to + 40° C (controller) +5° to + 52° C (controller with cooling device)
Relative humidity	Max. 95% at constant temperature

Storage conditions:

If the equipment is not going to be installed straight away, it must be stored in a dry area at an ambient temperature of between -25° C and + 55° C.

The net weight of the manipulator is approximately

IRB 6400PE /2.25-75	1590 kg
IRB 6400 /2.4-120	1870 kg
IRB 6400 /2.4-150, /2.8-120, /3.0-75	2010 kg
IRB 6400S /2.9-120	2240 kg

For Foundry (F) version, see corresponding non F-version.

The control system weighs approximately 300 kg.

Whenever the manipulator is transported, axis 2 must be bent backwards and axis 3 positioned as low as possible. The door of the controller must be closed and the teach pendant placed inside the cabinet. The transport security device for the pivoting framework in the cabinet must be installed.

1.1 Stability / risk of tipping

When the manipulator is not fastened to the floor and standing still, the manipulator is not stable in the whole working area. When the arms are moved it must be done carefully so the centre of gravity is not displaced which may cause the manipulator to tip over. The following table shows the positions where there is a risk of tipping, and refers to figures in chapter 3.8 in Product Specification IRB 6400, for definition of position 0 and 5.

Version	**Working area, position 0** load = 0 kg	load = max	**Working area, position 5** load = 0 kg	load = max
2.4-120	no	no	no	yes
2.4-150	no	no	no	yes
2.8-120	no	no	yes	yes
3.0-75	no	no	yes	yes
S /2.9-120	yes	yes	yes	yes
PE /2.25-75	no	yes	yes	yes

no = stable
yes = risk of tipping

For Foundry (F) version, see corresponding non F-version.

1.2 System diskettes

The diskettes in the box, fixed to the shelf for the teach pendant, should be copied (in a PC) before they are used. Never work with the original diskettes.
Once you have made copies of the original, store them in a safe place.

Do not store diskettes inside the controller due to the high temperatures there.

2 On-Site Installation

2.1 Lifting the manipulator

The best way to lift the manipulator is to use lifting straps and a traverse crane. Attach the straps to the lifting eyes on both sides of the frame (see Figure 1). The lifting straps dimensions must comply with the applicable standards for lifting. It is also possible to mount two lifting device (option) for use of a fork lift (see Figure 3).

Never walk under a suspended load.

Crane lift for:
2.4-120, 2.4-150, 2.8-120
and 3.0-75

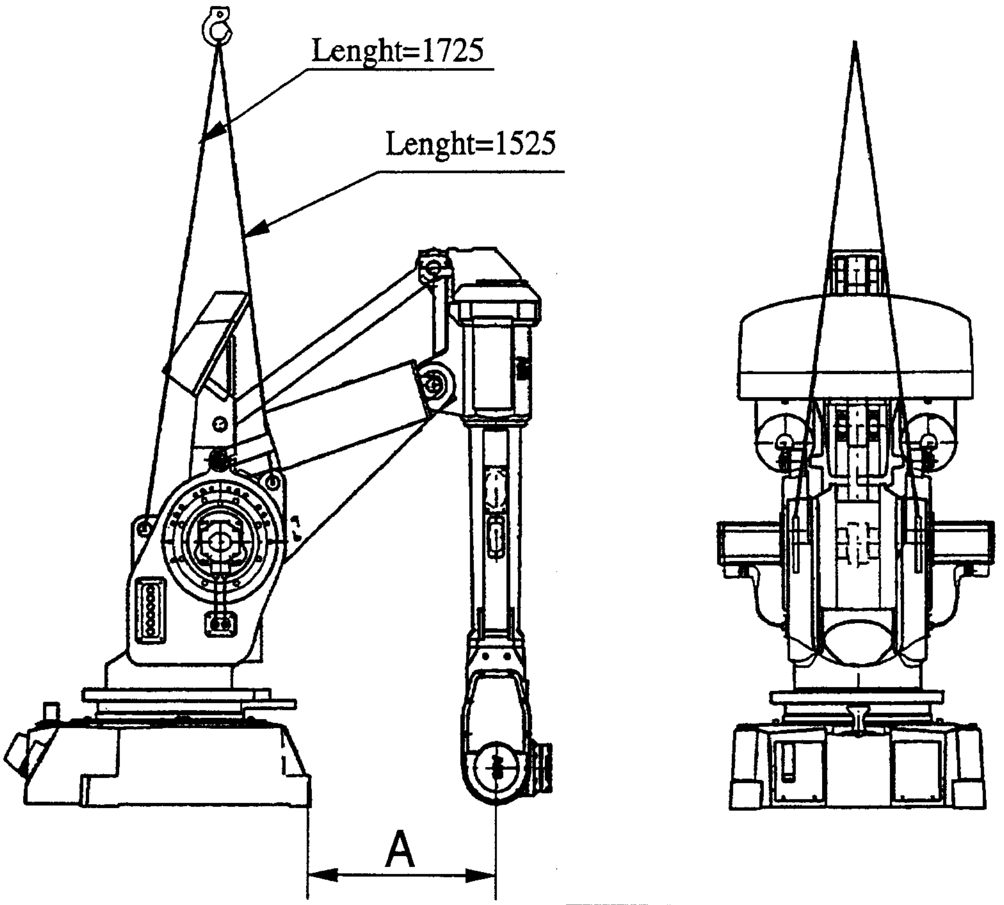

Lyft position Version	A
2.4-120	700
2.4-150	700
2.8-120	1350
3.0-75	1350

Figure 1 Lifting the manipulator using a traverse crane.

Crane lift , in calibation position for:
2.4-120, 2.4-150, 2.8-120
and 3.0-75

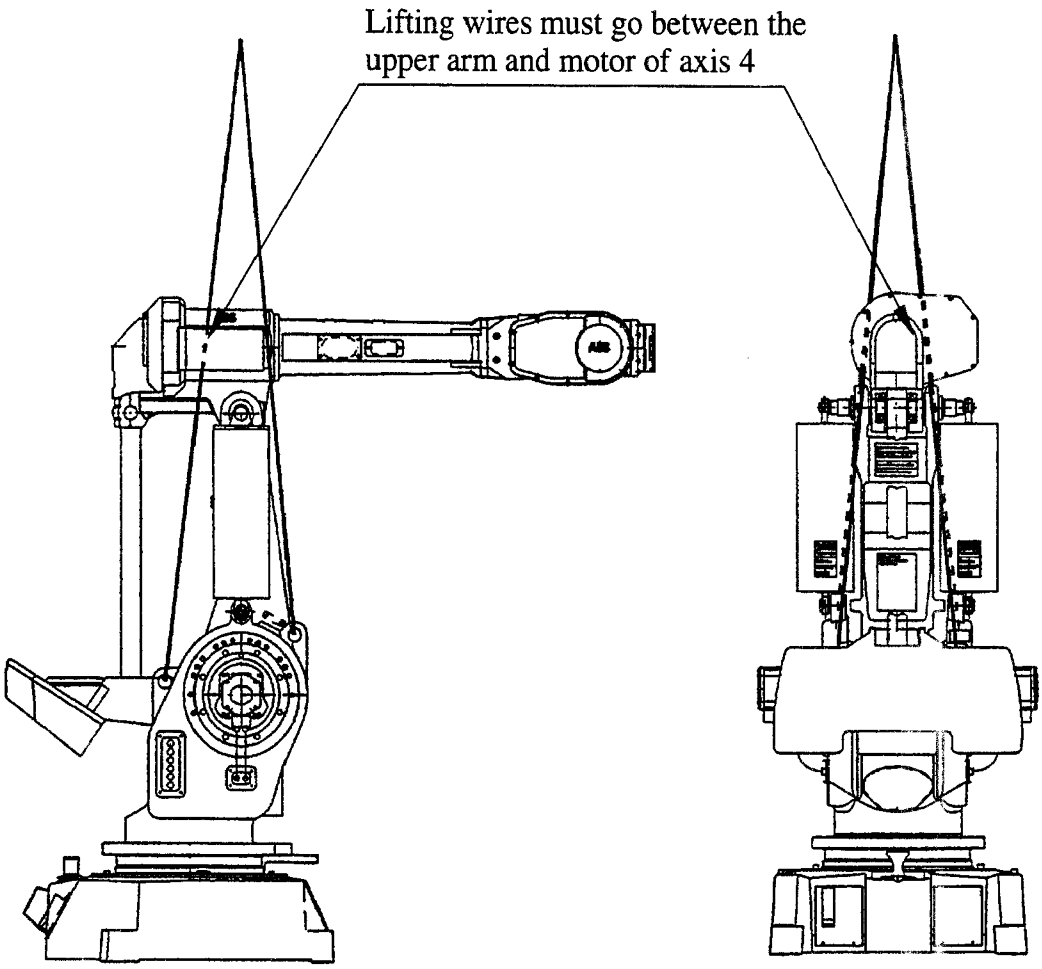

Figure 2 Lifting the manipulator with the arm system in the calibration position.

Fork lift for:
2.4-120, 2.4-150, 2.8-120
and 3.0-75

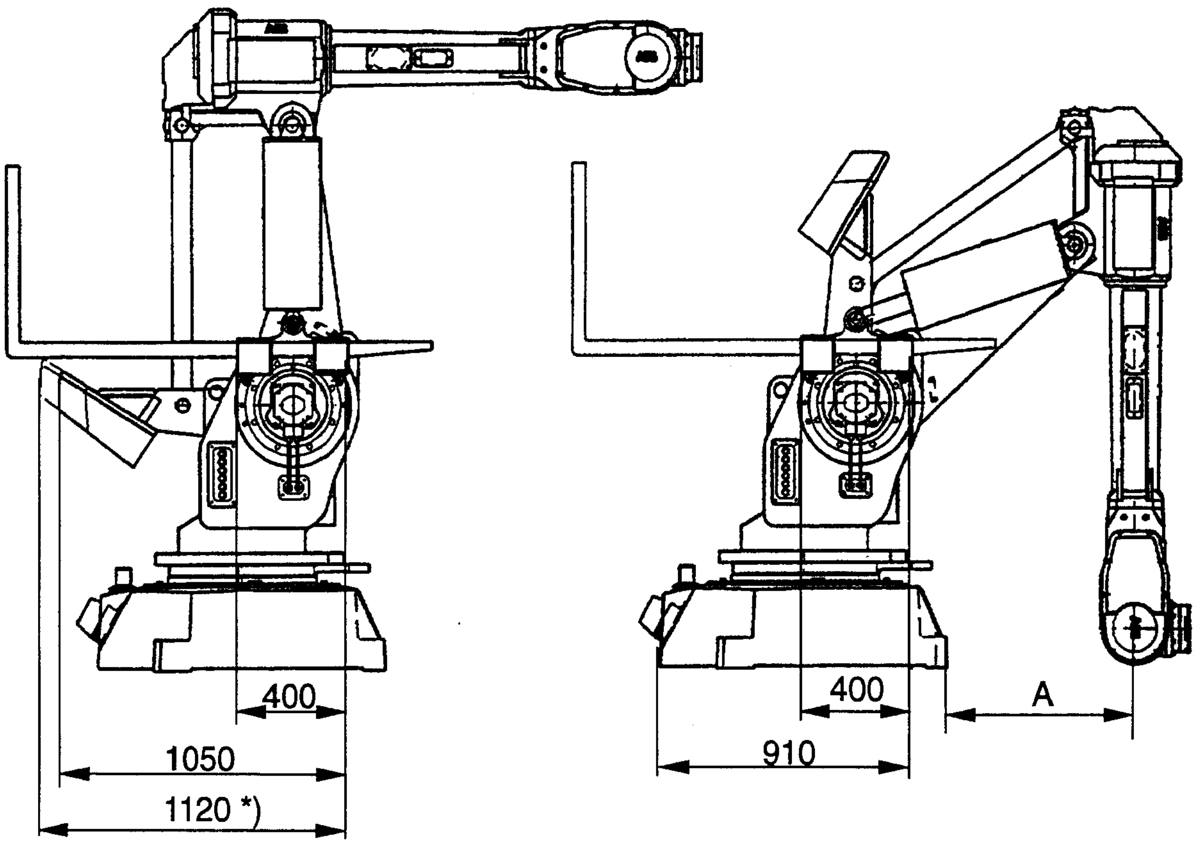

*) valid for
2.4-150, 2.8-120,
3.0-75

Lift position Version	A
2.4-120	700
2.4-150	700
2.8-120	1350
3.0-75	1350

Figure 3 Lifting the manipulator using a fork lift.

Crane lift is not allowed with fork lift arrangement.

Crane lift for:
S /2.9-120

Fork lift for:
S /2.9-120

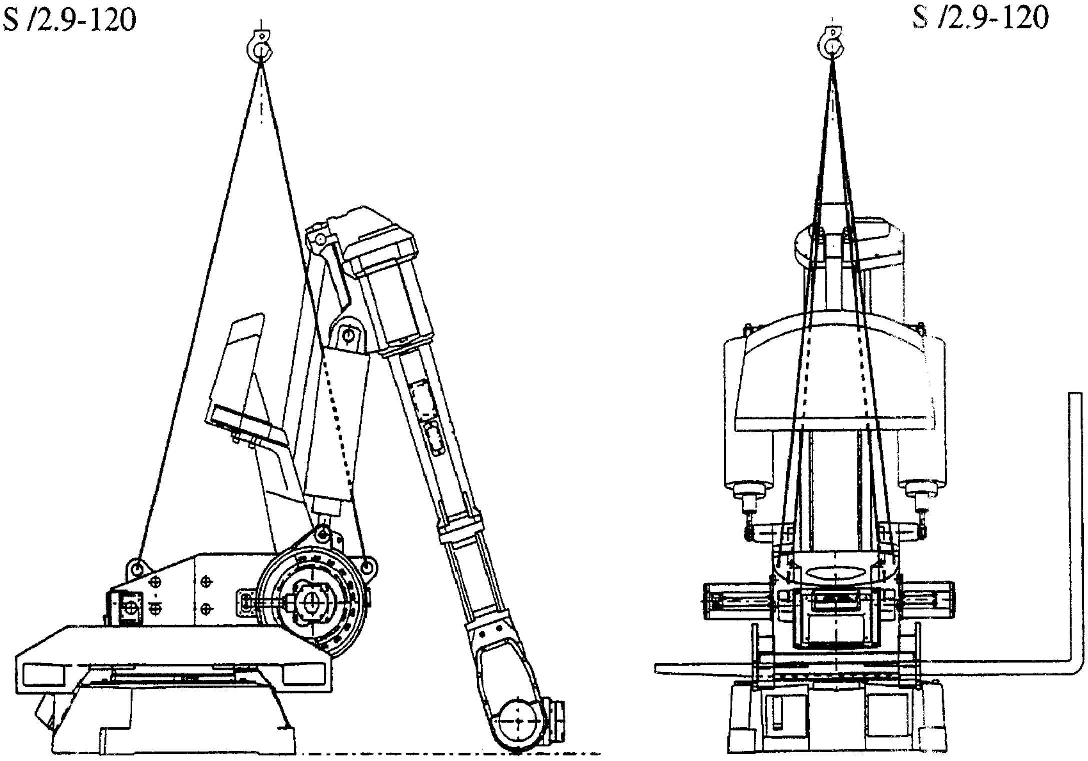

Figure 4 Lifting the manipulator using a crane or a fork lift.

WARNING!
Fork lift arrangement on S /2.9-120 must be dismounted before the robot is taken on operation!

Fork lift for:
PE /2.25-75

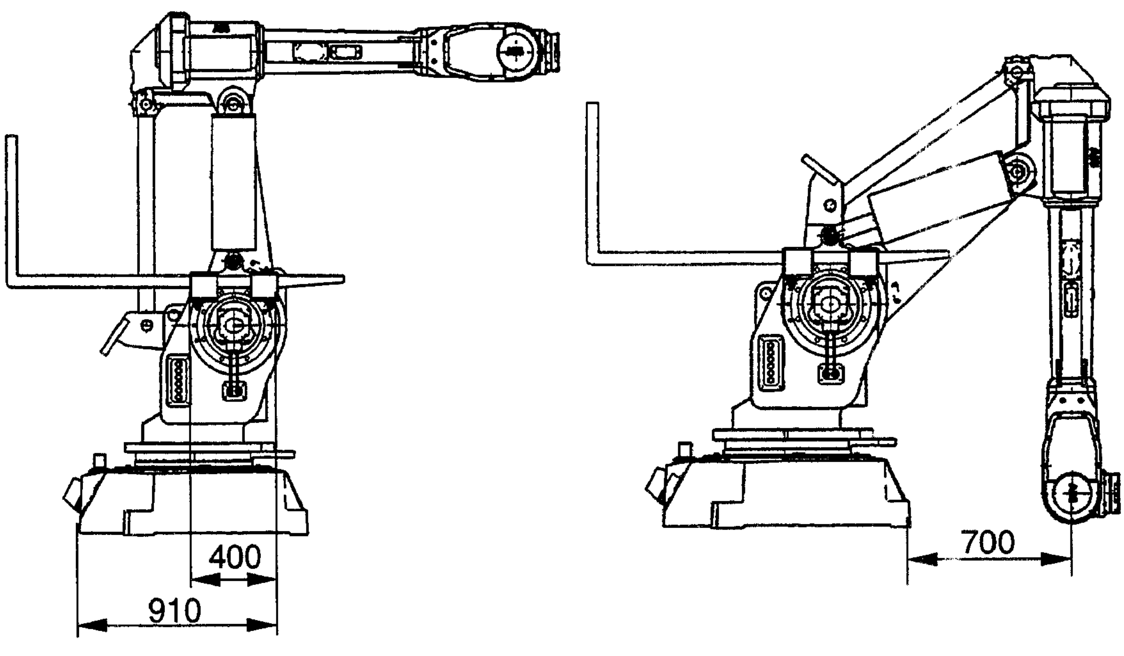

Figure 5 Lifting the manipulator using a fork lift.

Only lift IRB 6400PE/ 2.25-75 with a fork lift (Fork lift arrangement is standard)

Use the lifting eyes on the top of the cabinet when lifting the controller (see Figure 6).

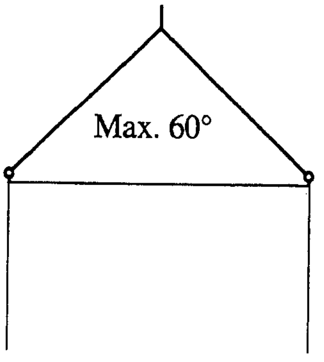

Figure 6 The maximum angle between the lifting straps when lifting the controller.

2.2 Assembling the robot

2.2.1 Manipulator

The three support points of the manipulator foot shall be mounted on three flat surfaces with a flatness whitin specification. Use shims if necessary. The rest of the surface must be flat within ± 2 mm. Hole configuration, see Figure 7. Floor mounted model can be tilted max. 5°.
The following is the levelness requirement of the surface:

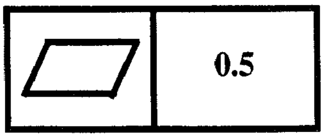

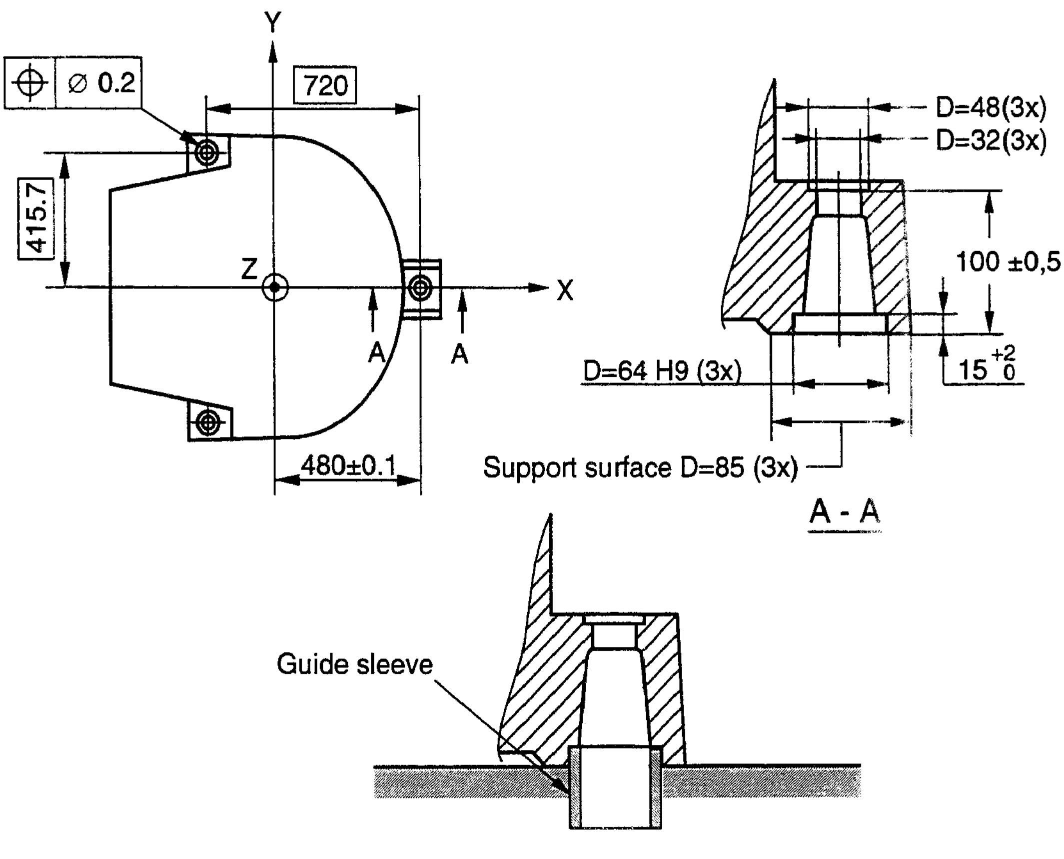

Figure 7 Bolting down the manipulator.

The manipulator is fixed with three M30 bolts, tightened alternately.

Suitable bolts: M30x160 8.8 Socket screw with washer

Tightening torque: 1000 Nm

Two guide sleeves can be added to two of the bolt holes, to allow the same manipulator to be re-mounted without program adjustment (see Figure 7).

When bolting a mounting plate or frame to a concrete floor, follow the general instructions for expansion-shell bolts. The screw joint must be able to withstand the stress loads defined in Chapter 2.3 Stress forces (concerns all versions) .

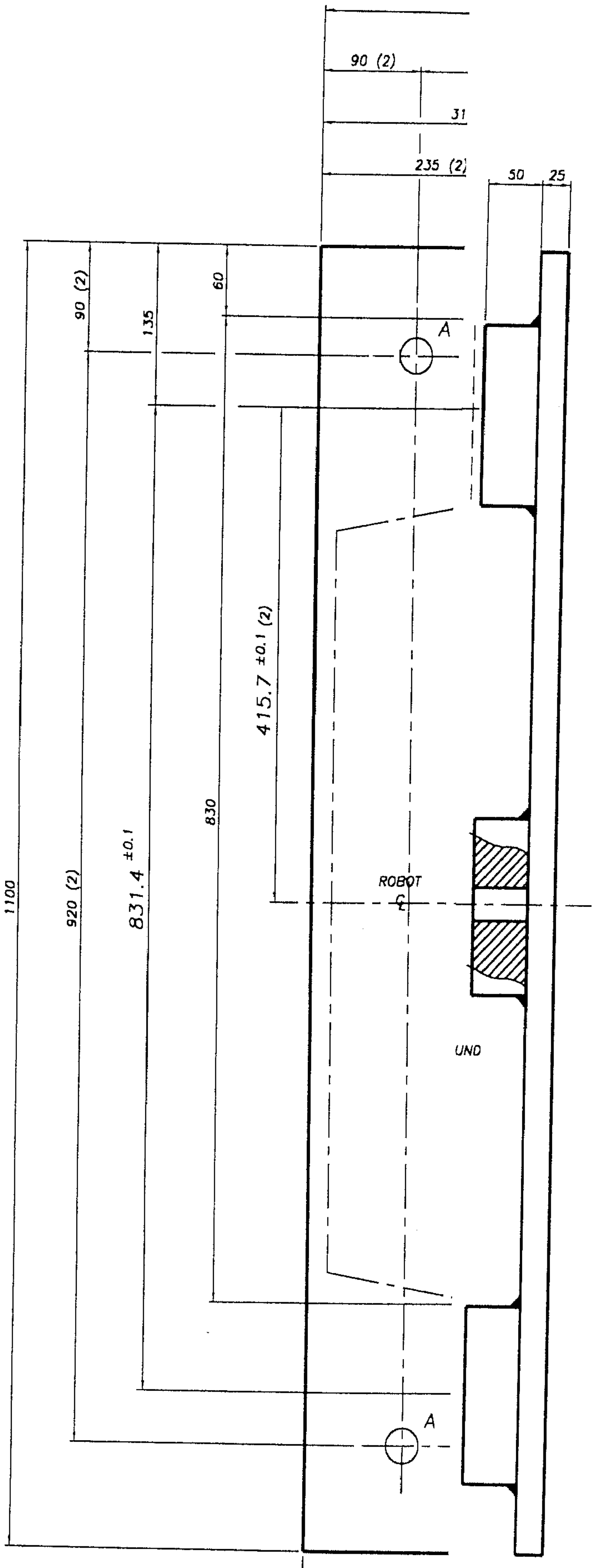

(3) DOWEL DETAILS

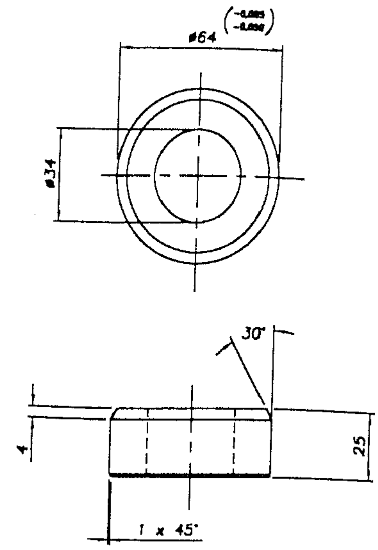

(5) WASHER DETAIL

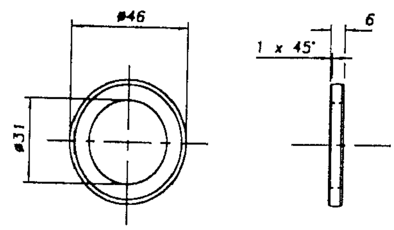

LOCATION DOWEL HOLES

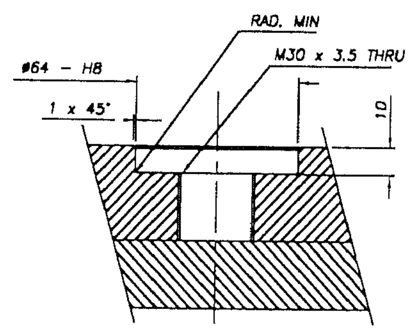

HOLE 'B' DETAILS

To: MALC,
FROM: DAVE C.

ITEMS 1 & 2

QA APPROVAL

STOCK LIST

REF	QTY	DESCRIPTION	MATL.	FINISH
8	6	WASHER M24 FLAT	CARBON STEEL	
7	6	NUT M24	CARBON STEEL	
6	6	ANCHOR STUD M24 x 150 LG	RAMSET	RESIN ANCHOR
5	3	WASHER	CARBON STEEL	
4	3	BOLTS M30 x 150 LG. SOC. HD.		BLACK
3	2	DOWEL SLEEVE	CARBON STEEL	MACHINED
2	3	PAD	CARBON STEEL	SEE NOTE
1	1	BASEPLATE	CARBON STEEL	SEE NOTE

KEY

HOLE	DESCRIPTION	QTY
A	ø28 THRU	6
B	SEE DETAIL 'B' OPPOSITE	2
C	M20 x 2.5 THRU	3
D	M30 x 3.5 THRU	1

T.PONTER.	Drawing Description: ROBOT BASEPLATE	CAD No. BP-6400F Autocad Rel 12
P.JARRETT	Customer: ABB FLEXIBLE AUTOMATION	SCALE 1:2
Date 21/4/95	Process Description: IRB6400	Sheet Size A0
3rd Angle Projection	Drawing No. BP-6400/F	Sheet 1 Of 1

2.2.2 Controller

Secure the controller to the floor using M12 screws (according to the hole layout below). See also Chapter 2.4 Amount of space required, before assembling the controller.

Not necessary when the controller is equipt with castor wheels.

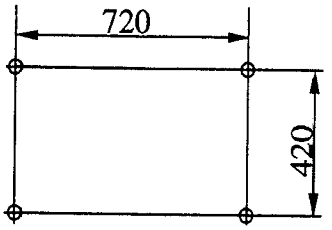

The shelf for the teach pendant is screwed onto the inside of the door on delivery. Unscrew it and screw it into the same holes on the outside of the door. Attach the teach pendant to the contact on the right of the shelf.

2.3 Stress forces (concerns all versions)

	Endurance load (In operation)	**Max. load (Emergency stop)**
Force xy	± 11300 N	± 18200 N
Force z	19000 ± 5500 N	19000 ± 10000 N
Torque xy	± 32000 Nm	± 39200 Nm
Torque z	± 4600 Nm (± 12000 Nm*)	± 12500 Nm

(*Valid for IRB 6400PE /2.25-75)

Force xy and Torque xy are vectors that can have any direction in the xy plane.

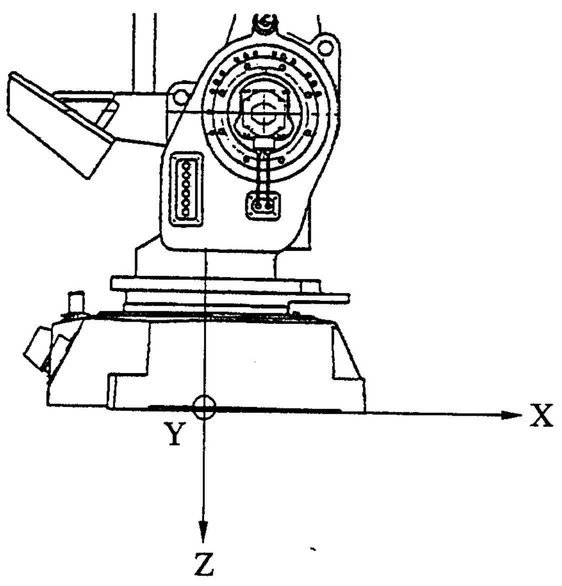

Figure 8 The directions of the stress forces.

2.4 Amount of space required

The amount of working space required to operate the manipulator and controller is illustrated in Figure 9 and Figure 11.
The working range for axis 1 is +/- 180°.

NB: There are no software or mechanical limits for the working space under the base of the manipulator.

2.4.1 Manipulator

IRB 6400 /2.4-120, /2.4-150, /2.8-120, /3.0-75, PE /2.25-75

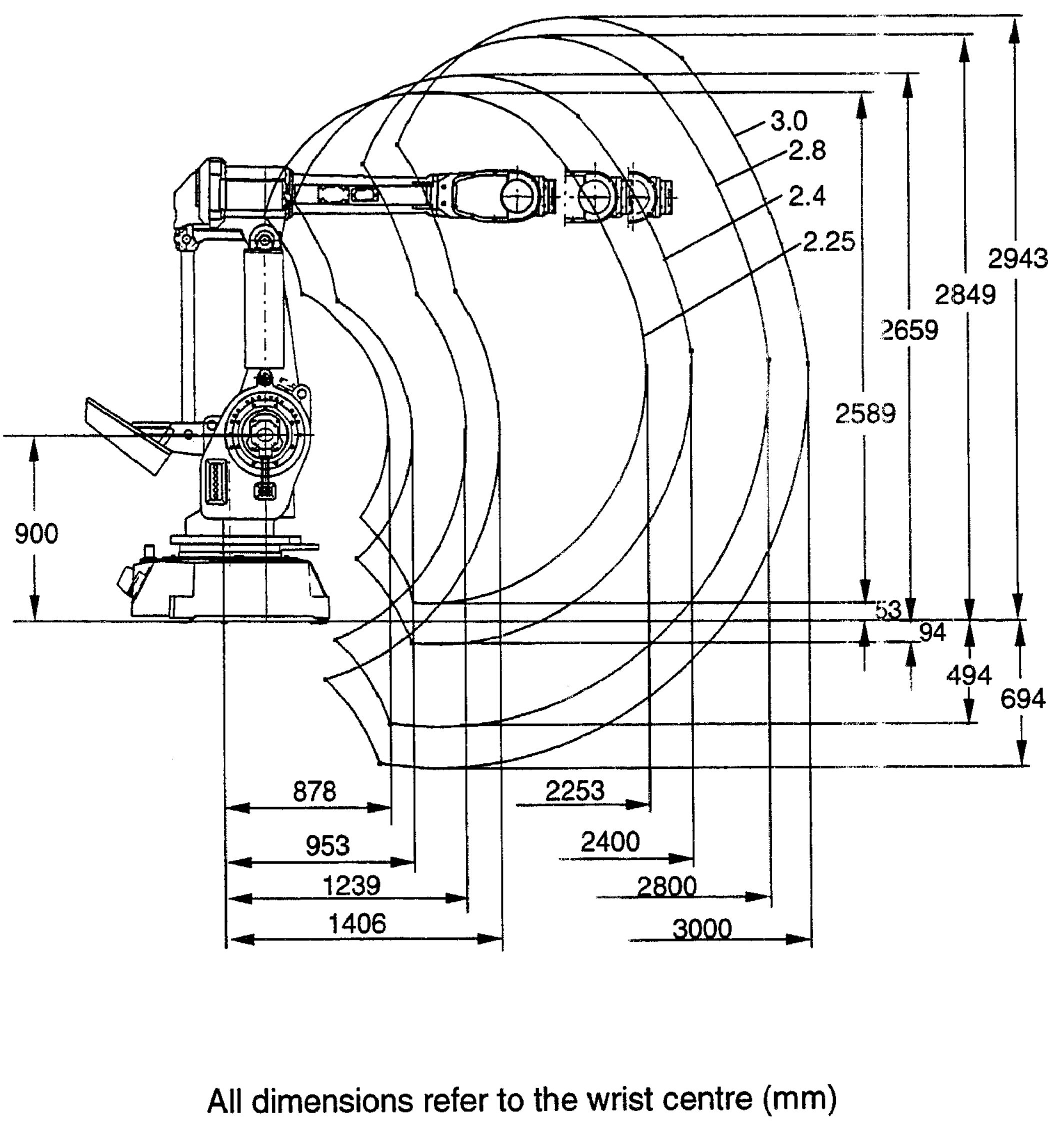

Figure 9 The amount of working space required for the manipulator.

IRB 6400S/ 2.9-120

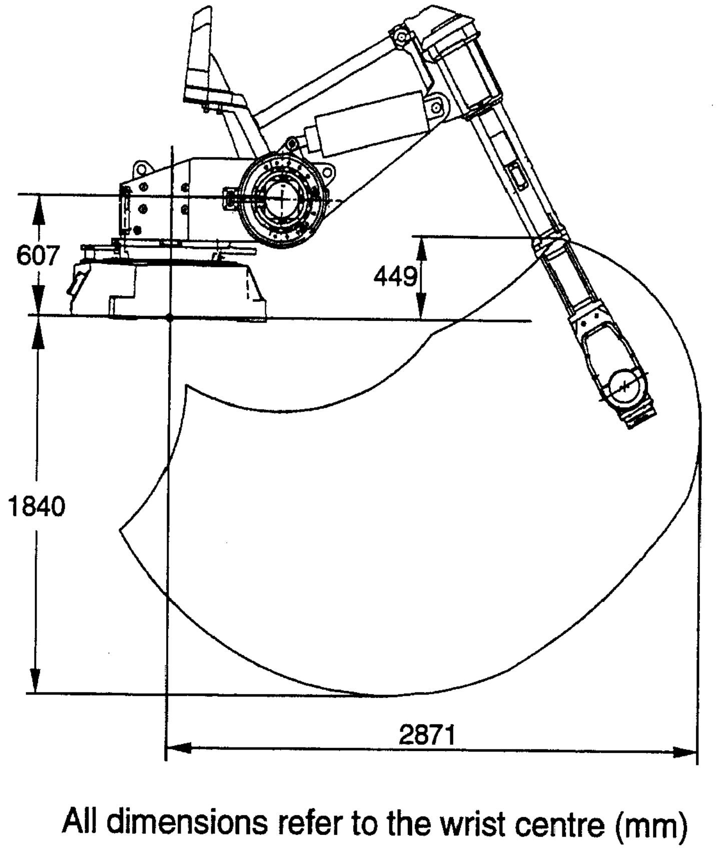

Figure 10 The amount of working space required for the manipulator.

2.4.2 Controller

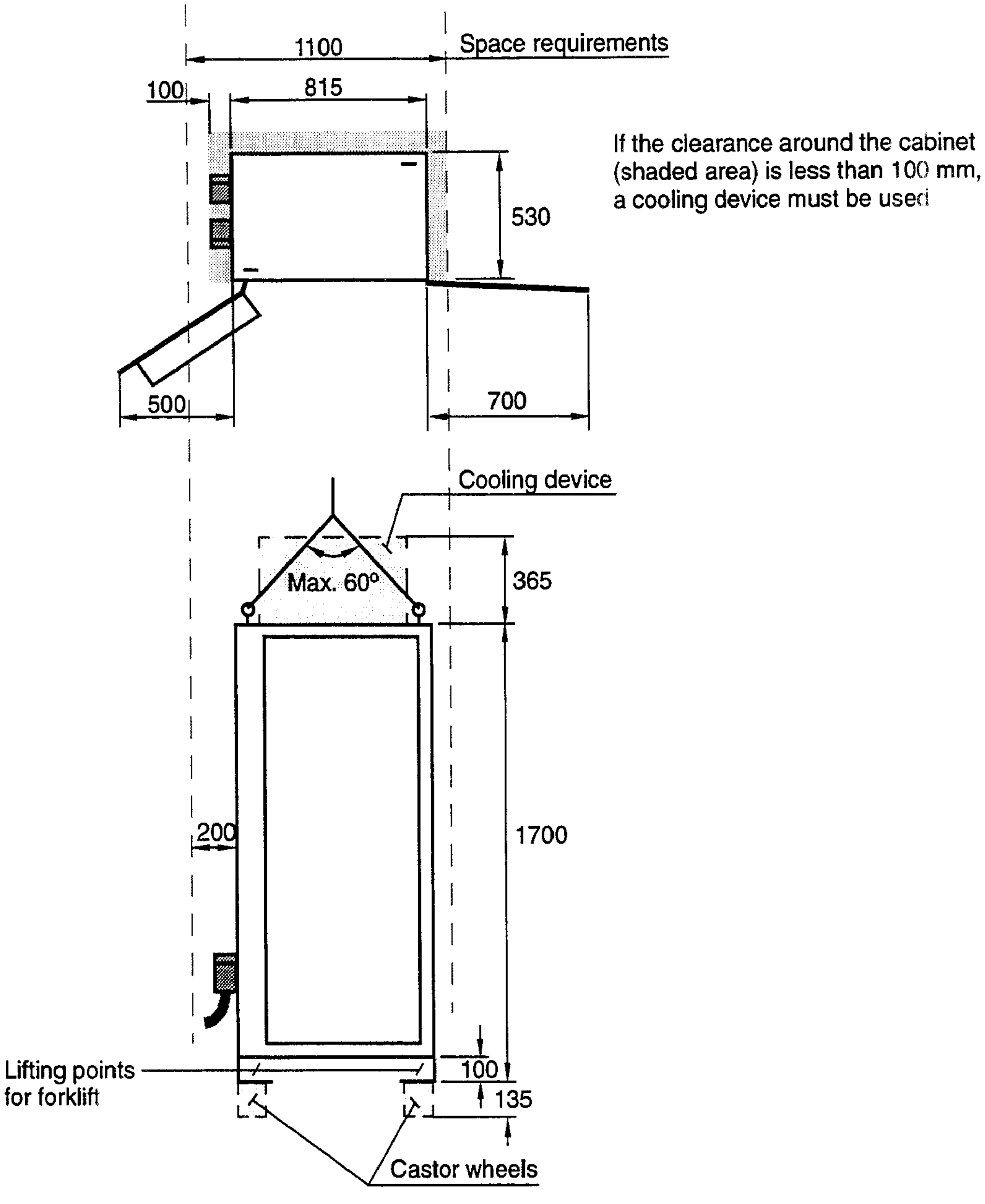

Figure 11 The amount of space required for the controller.

2.5 Manually engaging the brakes

All axes come equipped with holding brakes. If the position of the manipulator axes are to be changed without connecting the controller, an external voltage supply (24 V DC) must be connected to enable engagement of the brakes. The voltage supply should be connected to the contact at the base of the manipulator (see Figure 12).

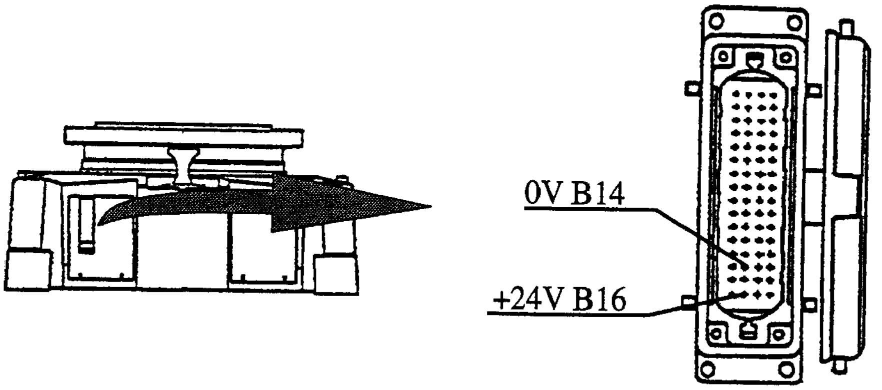

Figure 12 Connection of external voltage to enable engagement of the brakes.

When the controller or the voltage device are connected, illustrated above, the brakes can be engaged separately by means of the push-buttons on the brake release unit on the exterior of the axis 3 gear box. The push-buttons are marked with the appropriate axis name. The names of the axes and their motion patterns are illustrated in Figure 13.

WARNING: Be very careful when engaging the brakes. The axes become activated very quickly and may cause damage or injury.

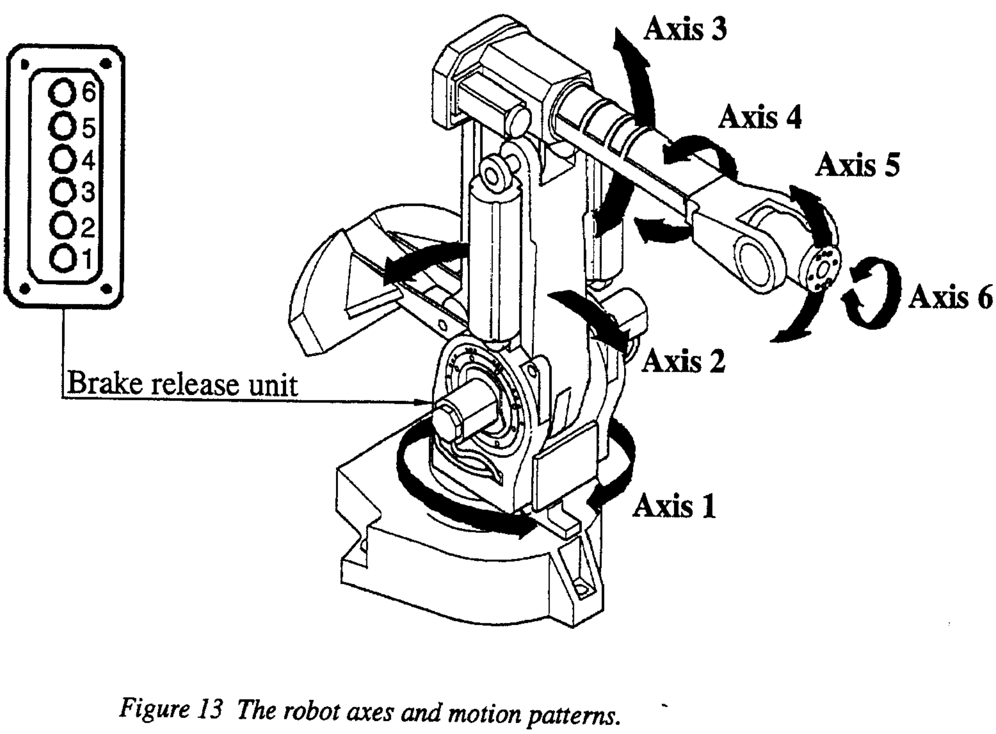

Figure 13 The robot axes and motion patterns.

2.6 Restricting the working space

When installing the manipulator, make sure that it can move freely within its entire working space. If there is a risk that it may collide with other objects, its working space should be limited, both mechanically and using software. Installation of an optional extra stop for the main axes 1, 2 and 3 is described below.

Limiting the working space using software is described in the System Parameters in the User's Guide.

2.6.1 Axis 1

The range of rotation for axis 1 can be limited mechanically by fitting extra mechanical stop arms.

Instructions for doing this are supplied with the kit.

IMPORTANT! The mechanical stop pin and the extra moveable mechanical stop arm for axis 1, must after a hard collision absolutely be replaced, if the pin or arm has been deformed.

2.6.2 Axes 2 and 3

The working range of axes 2 and 3 is limited by mechanically stops and can be reduced by adding fixed mechanical stops.

The stops are mounted on the inside of the frame to each axis.

Extra stops must be mounted in a row, with starting-point from the fixed stop.

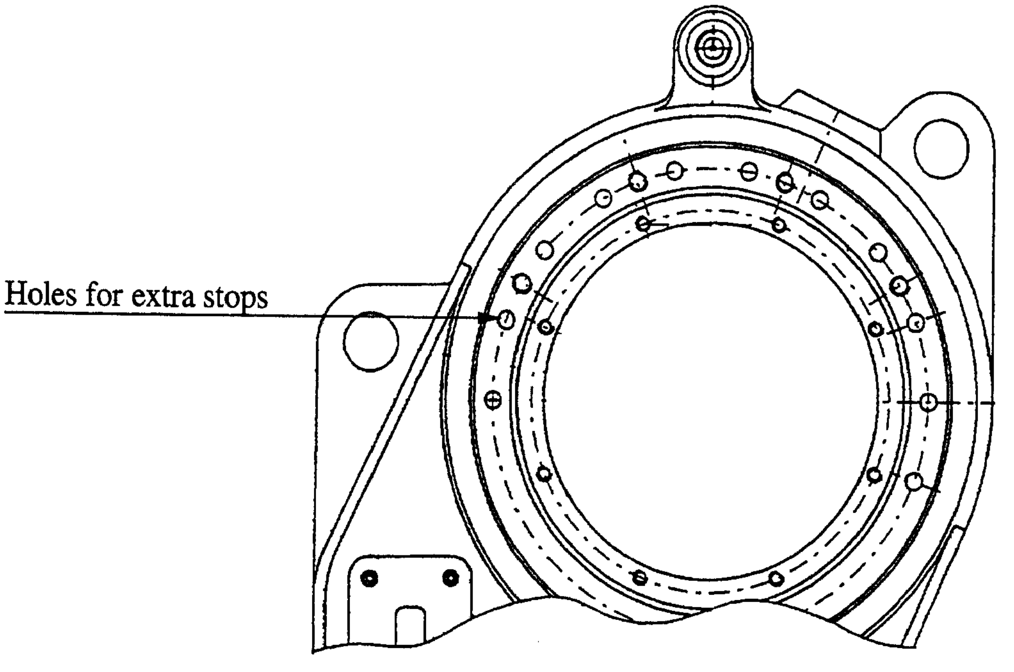

Figure 14 Mechanically limiting axes 2 and 3.

2.7 Mounting holes for equipment on the manipulator

NB: Never bore a hole in the manipulator without first consulting maintenance staff or the design department at ABB Flexible Automation

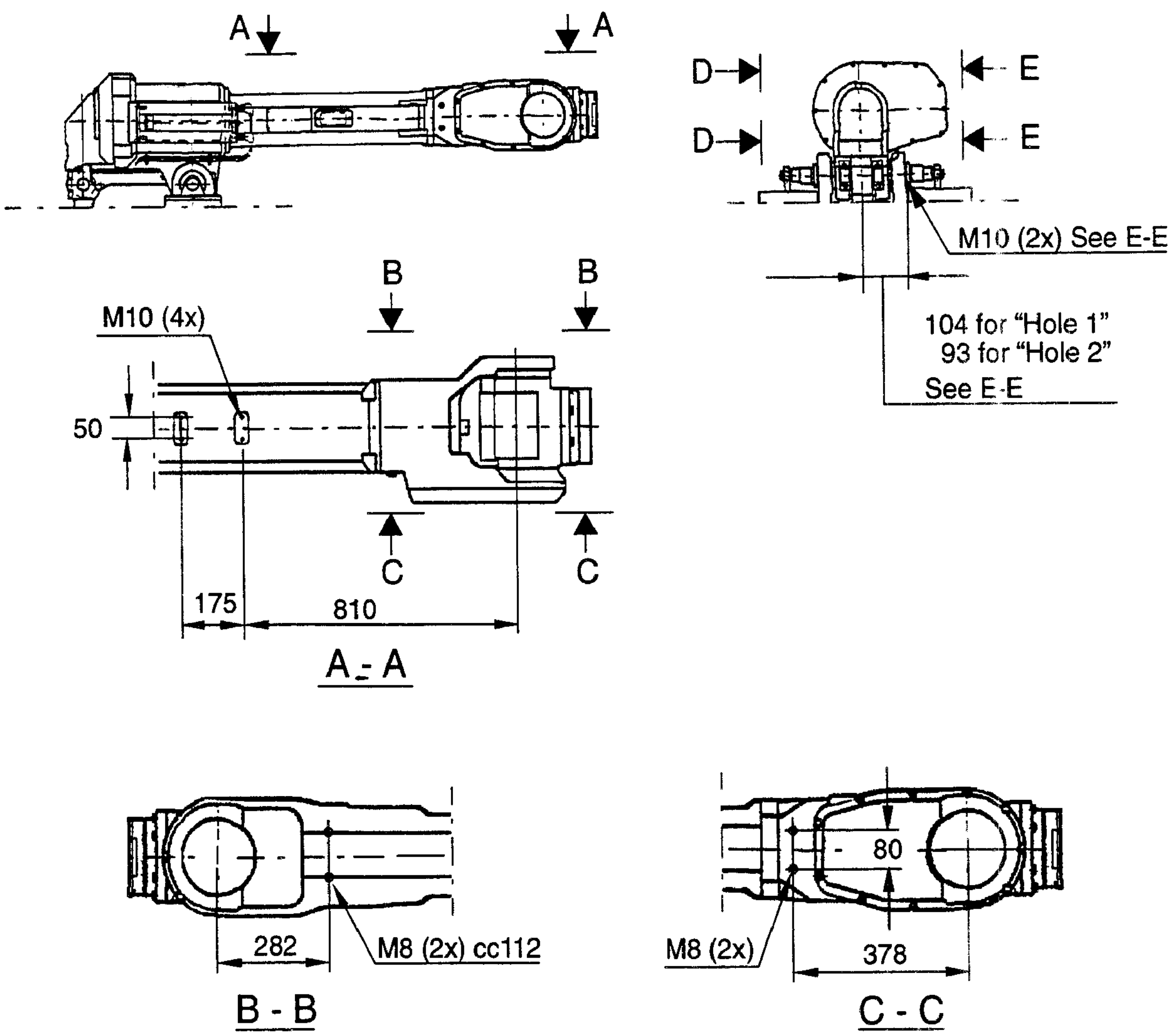

Figure 15 Holes for mounting of extra equipment (Measures in mm).

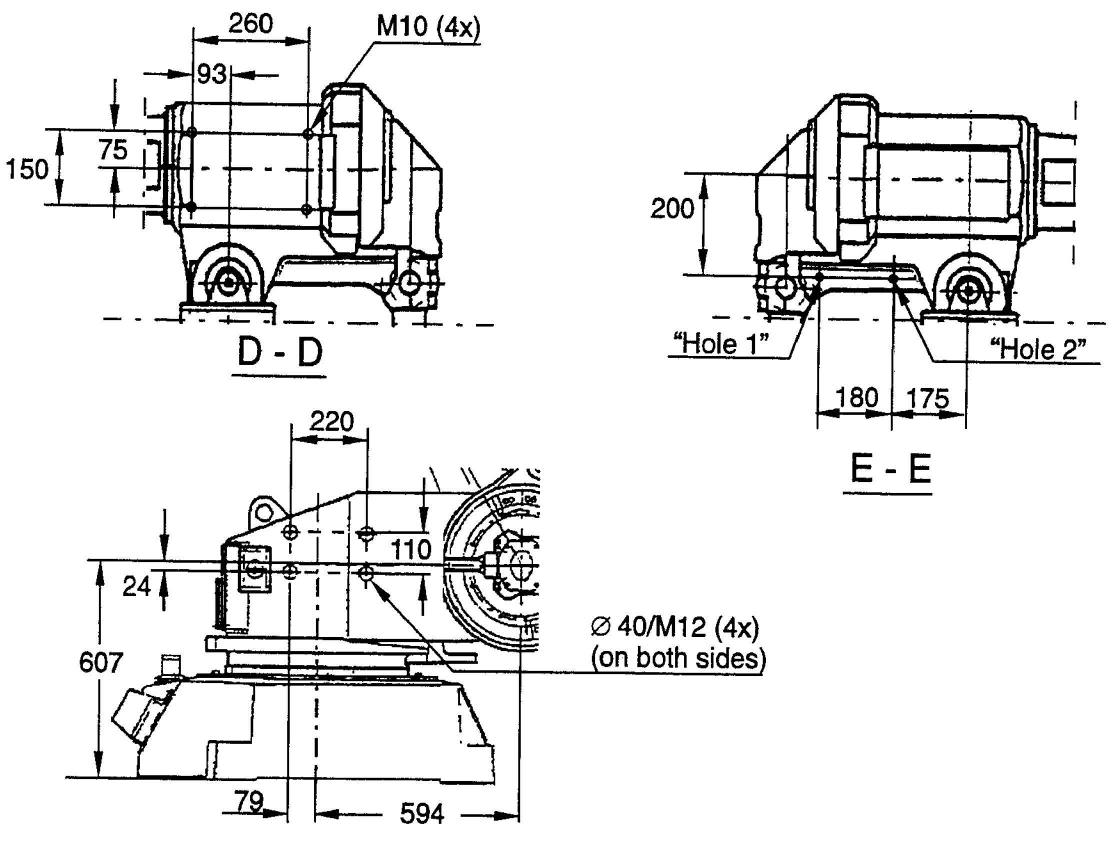

Figure 16 Holes for mounting of extra equipment (Dimensions in mm).

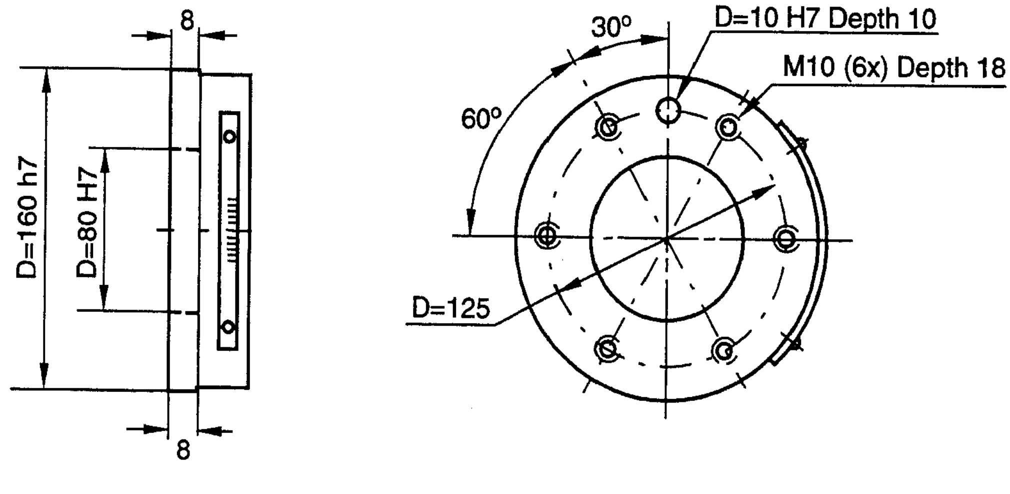

Figure 17 The mechanical interface (mounting flange) ISO 9409. (Dimensions in mm).

2.8 Loads

Regarding load diagram and permitted extra loads (equipment) and it's position, see chapter 3.4 in Product Specification IRB 6400 (Technical specification). The loads must also be defined in the soft ware, see User´s Guide.

2.9 Connecting the controller to the manipulator

Two cables are used to connect the controller to the manipulator, one for measuring signals and the other for power.

The connection on the manipulator is located on the rear of the robot base.

2.9.1 Connection on left-hand side of cabinet (option 121)

The cables are connected to the left side of the cabinet using an industrial connector and a Burndy connector (see Figure 18).

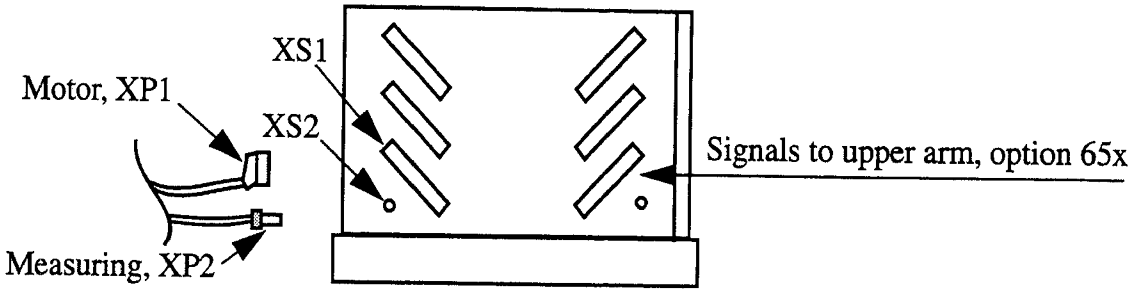

Figure 18 Connection on the cabinet wall.

2.9.2 Connection on the cabinet roof (option 122)

The cables are connected to the roof of the cabinet (Figure 19).

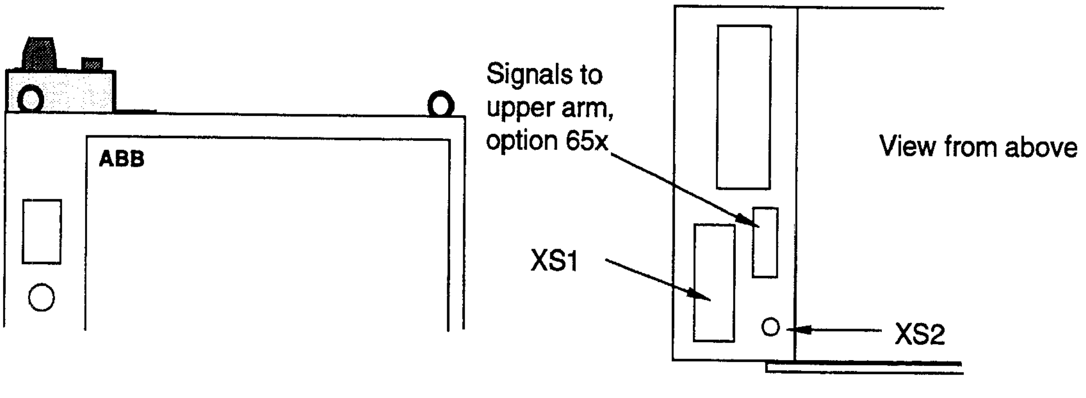

Figure 19 Connection on the cabinet roof.

2.10 Mains connection

Before starting to connect the mains, make sure that the connector is not plugged into the mains socket on the wall.

The power supply can be connected either inside the cabinet or to a socket on the left-hand side of the cabinet. The cable is not supplied. The following is required for the mains connection:

Four three-phase, conducting cables, and earth protection for all different voltage alternatives. Dimensioning of mains and fuses are done according to rated power and mains voltage, see identification plate on the controller.

2.10.1 Connection to the mains switch

A socket for the mains cable is located at the left cabinet wall.
Pull the mains cable through the gland and then tighten the gland (see Figure 20).

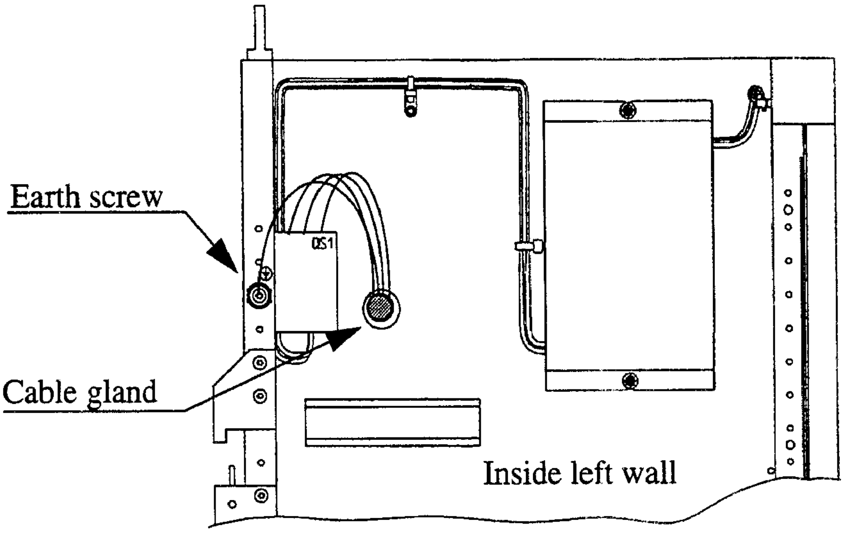

Figure 20 Mains connection inside the cabinet.

Also see the circuit diagram under chapter 12.

2.10.2 Connection via a power socket

You can also connect the mains supply via an optional wall socket of CEE types 3x16 and 3x32 A, or via an industrial Harting connector (DIN 41 640). See Figure 21.

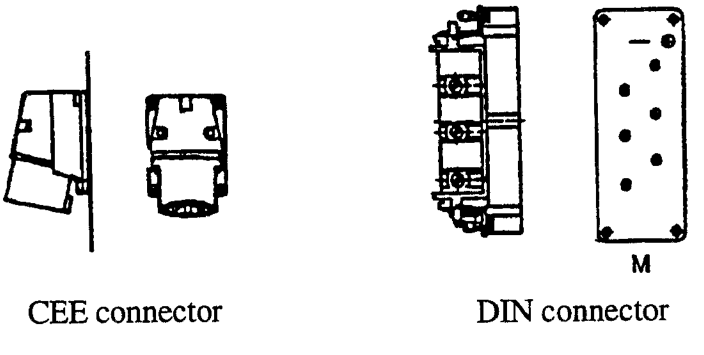

Figure 21 Mains connection via an optional wall socket.

2.11 Inspection before start-up

Before switching on the power supply, check that the following have been performed:

1. The mains voltage is protected with fuses.
2. The mains voltage is according to identification plate on the controller.
3. The teach pendant is connected to the cabinet.
4. The operating mode selector on the operator's panel should be in Manual mode position.

If external safety devices are to be used, the straps at either **XS3** (connector on the outside left cabinet wall) or **XT3** (screw terminal inside the cabinet) must be removed:

AUTO Stop	A3-A4 and B3-B4
Manual Stop	A1-A2 and B1-B2
General Stop	A5-A6 and B5-B6
Customer Emergency Stop	A7-A8 and B7-B8
	A9-A10 and B9-B10
MOTORS OFF, clamping device	C1-C2 and D1-D2
Limit switch, external axes	A11-A12 and B11-B12
POWER OK, external drive units	C12-C16

If the robot has external axes, check that these have been connected or that the following circuits in the XS7 connector on the left cabinet wall are strapped:

Motor PCT, axis 7	XS7	D1-D2
Limit switch, int. drive unit	XS7	A4-A5 and B4-B5

2.11.1 Start-up

1. Make sure that the door of the cabinet is shut.

2. Set the operator mode selector in Manual mode.

3. Switch on the mains switch located on the left of the cabinet.

4. The MOTORS OFF lamp on the operator's panel flashes when the robot has performed its self-test on both the hardware and software.
   This test takes approximately 20 seconds.

5. At a normal start a welcome window is displayed.

   To prevent unexpected robot movements, you must check that the robot has the correct system parameters before switching to MOTORS ON.

6. To switch from MOTORS OFF to MOTORS ON, press the enabling device on the teach pendant.

7. Check the calibration position according to section 2.12.2.

8. The robot is now ready for operation.

2.12 Updating the revolution counter

2.12.1 Setting the calibration marks on the manipulator

When pressing the enabling device on a new robot, you receive a message telling you that the revolution counter are not updated. The message appears in the form of an error code on the teach pendant. If you receive such a message, the revolution counter of the manipulator must be updated using the calibration marks on the manipulator (see Figure 26).

Examples of when the revolution counter has to be updated:
- when the battery unit is discharged,
- when there has been a resolver error,
- when the signal between the resolver and the measuring system board has been interrupted,
- when one of the manipulator axes has been manually moved with the controller disconnected.

It takes 18 hours' with mains switch on to recharge the battery unit.

If the resolver values have to be calibrated, this should be done according to the chapter on Repairs in the IRB 6400 Product Manual.

WARNING:
Working in the robot work cell is dangerous.

Press the enabling device on the teach pendant and, using the joystick, manually move the robot so that the calibration marks lie within the tolerance zone (see Figure 26).

When all axes have been positioned as above, the values of the revolution counter can be stored using the teach pendant as follows:

1. Press the **Misc.** window key (see Figure 22).

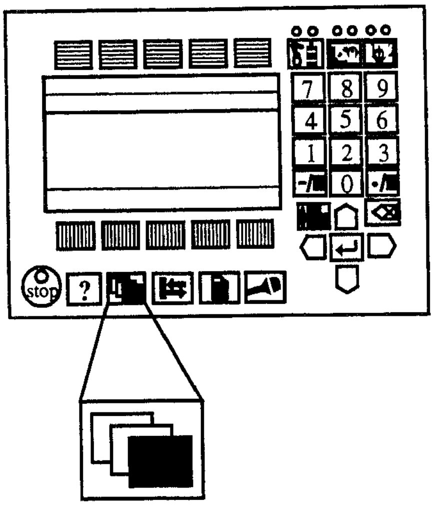

Figure 22 The Misc. window key from which the Service window can be chosen.

2. Select **Service** in the dialog box shown on the display.

3. Press Enter .

4. Then, choose **View: Calibration**. The window in Figure 23 appears.

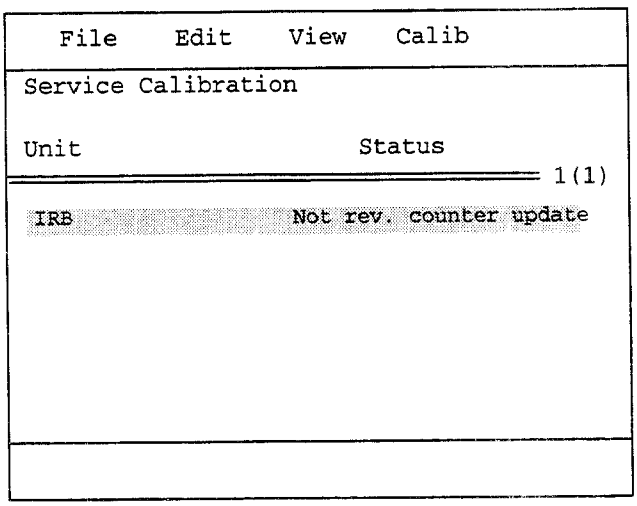

Figure 23 This window shows whether or not the robot system units are calibrated.

If there are several units connected to the robot , these will be listed in the window.

5. Select the desired unit in the window, as in Figure 23.
   Choose **Calib: Rev. Counter Update**. The window in Figure 24 appears.

```
Rev. Counter Update!
IRB
To calibrate, include axes and press OK.

     Axis                Status
                                      1(6)
X     1          Not updated Rev. Counter
X     2          Not updated Rev. Counter
      3          Calibrated
      4          Calibrated
X     5          Not updated Rev. Counter
X     6          Not updated Rev. Counter

   Incl     All            Cancel    OK
```

Figure 24 The dialog box used to select axes whose revolution counters are to be updated.

6. Press the function key ***All*** to select all axes if all axes are to be updated. Otherwise, select the desired axis and press the function key ***Incl*** (the selected axis is marked with an x).

7. Confirm by pressing ***OK***. A window like the one in Figure 25 appears.

```
Rev. Counter Update!
IRB

The Rev. Counter for all marked axes
will be update.
It cannot be undone.

OK to continue?

                              Cancel    OK
```

Figure 25 The dialog box used to start updating the revolution counter.

8. Start the update by pressing ***OK***.

If a revolution counter is incorrectly updated, it will cause incorrect positioning. Thus, check the calibration very carefully after each update. Incorrect updating can damage the robot system or injure someone.

9. Check the calibration as in Chapter 2.12.2 Checking the calibration position.

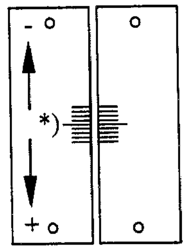

*) axis number

Figure 26 Calibration marks on the manipulator.

2.12.2 Checking the calibration position

There are two ways to check the calibration position; these are described below.

Using the system diskette, Set up:

Run the program \ SERVICE \ CALIBRAT \ CAL 6400 on the system diskette, Set up. When the robot is calibrated, switch to MOTORS OFF. Check that the calibration marks for each axis are on the same level, see Figure 26. If they are not, the calibration must be redone.

Using the Jogging window on the teach pendant:

Open the Jogging window and choose running axis-by-axis. Using the joystick, move the robot so that the read-out of the positions equals 0. Check that the calibration marks for each axis are on the same level, see Figure 26. If they are not, the calibration must be redone.

2.12.3 Alternative calibration positions

See chapter 13, Repairs, section 13.

2.12.4 Operating the robot

Starting and operating the robot is described in the User's Guide. Before start-up, make sure that the robot cannot collide with other objects in the working space.

3 Connecting Signals

3.1 Signal classes

Power – supplies the electric motors.

Control signals – digital operating and data signals (digital I/O, emergency stop, work stop, etc.)

Measuring signals – analog measuring and control signals (resolver, tachometer – if any – and analog I/O).

Data communication signals – (printouts, computer link, cable to externally-mounted operator's panels).

Different rules apply to the different classes when selecting and laying cable. Signals from different classes must not be mixed.

3.2 Cables

All cables laid in the controller must be capable of withstanding 70° C. In addition, the following rules apply to the cables of certain signal classes:

Power signals -Shielded cable with an area of at least 0.75 mm^2 or AWG 18. Note that any local standards and regulations concerning insulation and area must always be complied with.

Control signals – Shielded cable.

Measuring signals – Shielded cable with twisted pair conductors.

Data communication signals – Shielded cable with twisted pair conductors.

3.3 Laying the cables

Power signals – These signals generate much interference and must be laid in separate shielded cables. The shielding, which is to be applied to both ends of the cable, must be connected to a paint-free part of the panel chassis of the cabinet. Any unshielded cables must be as short as possible.

Measuring signals – These signals are very sensitive to interference. To protect these signals, the cable should not be placed closer than 30 cm to power signals. In the cable, each signal must be twisted with a neutral wire. The shielding, which is to be applied to both ends of the cable, must be connected directly to the chassis using a steel brace.

Data communication signals – These signals are very sensitive to interference. To protect these signals, the cable should not be placed closer than 30 cm to power signals. In the cable, each signal must be twisted with a neutral wire. The shielding, must be connected directly to the chassis using a steel brace.

Control signals – These signals are not as sensitive to interference. Nonetheless, they should not to be placed beside or parallel to unshielded cables. The shielding, which is to be applied to both ends of the cable, must be connected to the chassis using a steel brace.

3.4 Interference elimination

The relay coils and other units that generate interference inside the controller are neutralised so that they do not interfere.

The relay coils, inductors and motors connected to the system outside the controller must be neutralised in the same way. Figure 27 illustrates how this can be done.

Note that the turn-off time for DC relays increases after neutralisation, especially if a diode is connected over the coil. Varistors give shorter turn-off times. Diodes and RC filters can be replaced by varistors. Neutralising the coils lengthens the life of the contacts that control them.

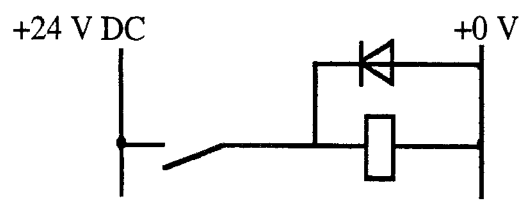

The diode is to be dimensioned for the same current as the relay coil, and a voltage of twice the supply voltage.

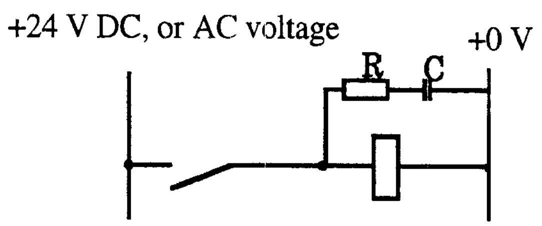

R 100 ohm, 1W
C 0.1 - 1 µF
> 500 V max voltage
125 V nominal voltage

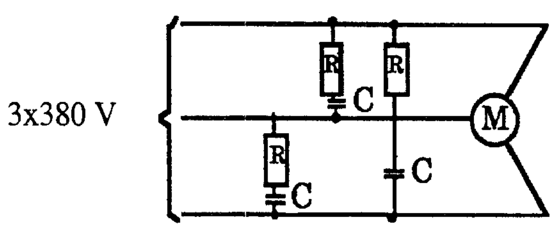

R 100 ohm, 2 W
C 0.5 µF
> 1000 V max voltage
> 420 V nominal voltage

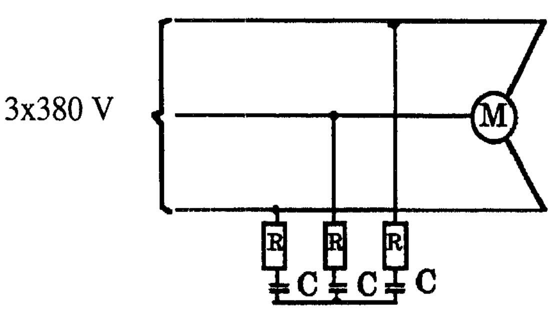

R 100 ohm, 2 W
C 0.5 µF
> 1000 V max voltage
> 250 V nominal voltage

Figure 27 Example of how peripheral equipment is neutralised.

3.5 Connections to sockets

Sockets to connect I/O, external emergency stops, safety stops, etc., can be supplied on industrial connectors or as screwed connections.

A connector is called XP when it has pins (male) and XS when it has sockets (female). A screwed connection is termed an XT.

3.6 Connections to contacts

Industrial connectors with 4x16 pins for contact pressing (complies with DIN 43652) can be found along the whole left-hand side of the cabinet (depending on the customer order) (see Figure 28).

The I/O connections can be for either male connection (option 31x) or female connection (option38x). The connection for external emergency stops, safety stops etc. (option D1) are for male connections.

The manipulator arm is equipped with round Burndy connectors (option43x).

In general, the following applies when connecting signals:

Overhead jumpers should be located on the **customer side** of the contact.

Bend any disconnected conductors backwards and attach them to the cable using a clasp, for example. In order to prevent interference, make sure that the conductors are not connected at the other end of the cable (antenna effect). In environments with much interference, disconnected conductors should be earthed (0 V).

When contact pressing industrial connectors, the following applies:

Using special tongs, press a pin into each non-insulated conductor (see next page).
The pin can then be snapped into the actual contact.
Push the pin into the connector until it locks.

A special tool (see next page) is used to remove pins from industrial connectors.

If **two** conductors must be connected to the same pin, both of them are pressed into the same pin. A **maximum** of **two** conductors may be pressed into the same pin.

When soldering Burndy connectors, watch out for faulty soldered joints.

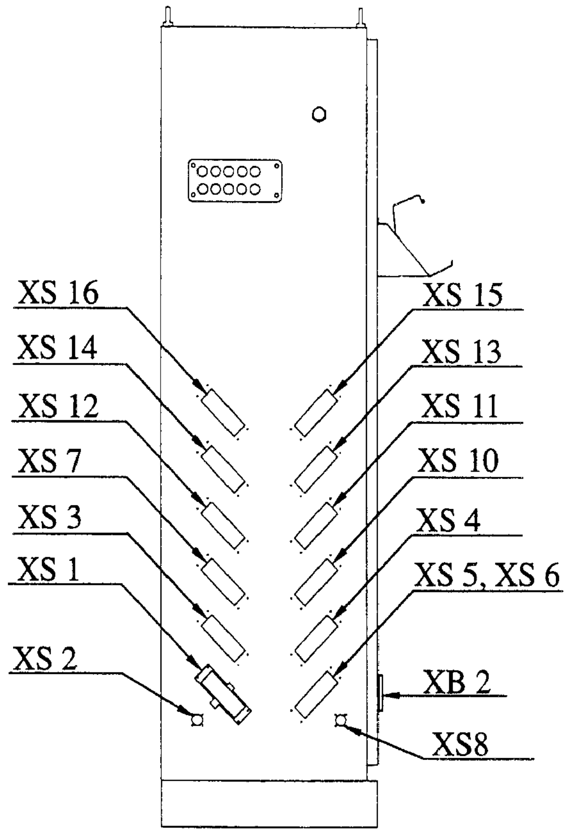

Figure 28 Positions for connections on the left-hand side of the controller.

3.7 Connection to connectors (external)

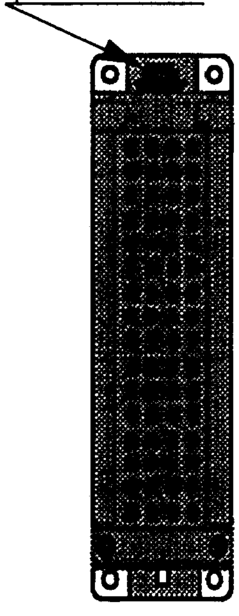

Equipment necessary Article (option 31x,D1)	Article No. ABB	Article No. Amphenol
Industrial connector, plug	5217 687-24*	C146 10A064 000 2
Hood	5217 687-21*	C146 10G064 502 2
Keying	5217 687-9*(2)	VN17 050-0004
Socket, conducting area 0.14-0.5 mm^2	5217 1021-1*(100)	VN17 016-0003
Socket, conducting area 0.5-1.5 mm^2	5217 1021-2*(100)	VN17 016-0002
Contact-pressing tool	6393 153-2	
Extractor	6393 153-4	

* part of option 67x

Equipment necessary Article (option 38x)	Article No. ABB	
Industrial connector, plug	5217 687-23	**
Hood	5217 687-21	**
Keying	5217 687-9	**(2)
Pin, conducting area 0.14-0.5 mm^2	5217 1021-4	**(100)
Pin, conducting area 0.5-1.5 mm^2	5217 1021-5	**(100)
Contact-pressing tool	6393 153-2	
Extractor	6393 153-4	

** part of option 68x

Figure 29 Industrial connector.

Technical information

The contact has room for four rows of 16 conductors with a maximum conductor area of 1.5 mm^2. The pull-relief clamp must be used when connecting shielding to the case.

3.8 Customer connections on manipulator

If option 04y is chosen the customer connections are available at the front of the upper arm.

The hose for compressed air is integrated into the manipulator. There is an inlet at the base and an outlet on the upper arm housing.
Connection: R 1/2" in the upper arm and R 1/2" at the base.

For connection of extra equipment on the manipulator, there are cables integrated into the manipulator's cabling and one Burndy 23-pin UTG 018-23S and one Burndy 12-pin UTG 014-12S connector on the moveable part of the upper arm.

Number of signals: 23 signals 50 V, 250 mA, 10 power signals 250 V, 2 A, one protective earth.

Air and signal interfaces to the upper arm are supplied as standard on the S /2.9-120, PE /2.25-75 and all Foundry versions.

Robot Fittings
1/2" BSP Female

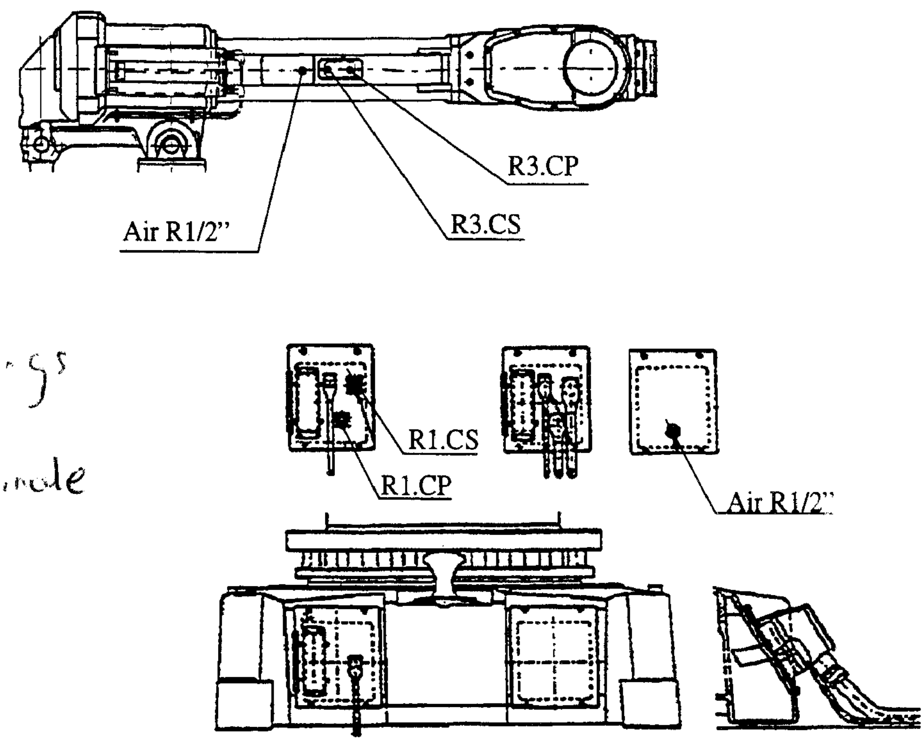

Figur 30 Location of customer connections.

To connect to power and signal conductors from the connection unit on the upper arm and to the manipulator base, the following parts are recommended:

Connector R1.CS. Signals on the manipulator base. (Regarding **Pos** see Figure 31)				
Pos	**Name**	**ABB art. no.**	**Type**	**Comments**
1	Pin connector 23p	3HAA 2599-3	UTO 018 23 SHT	Burndy
2	Gasket	2152 0363-5	UTFD 16 B	Burndy
3	Pin	See below		
4	Socket con. 23p	3HAA 2600-3 5217 649-75	UTG 618 23 S 04T	Burndy EMC
5	Sockets	See below		
6	Adaptor	3HAA 2601-3 5217 1038-5	UTG 18 ADT UTG 18 AD	Burndy EMC Burndy
7	Cable clamp	5217 649-36	UTG 18 PG	Burndy
8	Shrinking hose Shrinking hose	3HAA 2614-3 5217 1032-5		Bottled shaped Angled

Connector R1.CP. Power signals on the manipulator base. (Regarding **Pos** see Figure 31)				
Pos	**Name**	**ABB art. no.**	**Type**	**Comments**
1	Pin connector 12p	3HAA 2599-2	UTO 614 12 PN04	Burndy
2	Gasket	5217 649-64	UTFD 13 B	Burndy
3	Pin	See below		
4	Socket con. 12p	3HAA 2600-2 5217 649-53	UTO 614 12S 04T UTG 614 12 SN	Burndy EMC Burndy
5	Sockets	See below		
6	Adaptor	3HAA 2601-2	UTG 14 ADT	Burndy EMC
7	Cable clamp	5217 649-8	UTG 14 PG	Burndy
8	Shrinking hose Shrinking hose	3HAA 2614-2 5217 1032-4		Bottled shaped Angled

Connector R3.CS. Signals on the upper arm. (Regarding **Pos** see Figure 31)				
Pos	**Name**	**ABB art. no.**	**Type**	**Comments**
1	Socket con. 23p	3HAA 2613-3	UTO 018 23 SHT	Burndy
2	Gasket	2152 0363-5	UTFD 16 B	Burndy
3	Socket	See below		
4	Pin con. 23p	3HAA 2602-3 5217 649-34	UTG 61823 PN04 UTG 61823 PN	Burndy EMC Burndy
5	Pin	See below		
6	Adaptor	3HAA 2601-3 5217 1038-5	UTG 18 ADT UTG 18 AD	Burndy EMC Burndy
7	Cable clamp	5217 649-36	UTG 18 PG	Burndy
8	Shrinking hose Shrinking hose	3HAA 2614-3 5217 1032-5		Bottled shaped Angled

Connector R3.CP. Power signals on the upper arm. (Regarding **Pos** see Figure 31)				
Pos	**Name**	**ABB art. no.**	**Type**	**Comments**
1	Socket con. 12p	3HAA 2613-2	UTO 014 12 SHT	Burndy
2	Gasket	5217 649-64	UTFD 13 B	Burndy
3	Socket	See below		
4	Pin con. 12p	3HAA 2602-2 5217 649-7	UTO 61412 PN04 UTO 61412 PN	Burndy EMC Burndy
5	Pin	See below		
6	Adaptor	3HAA 2601-2 5217 1038-3	UTG 14 ADT UTG 14 AD	Burndy EMC Burndy
7	Cable clamp	5217 649-8	UTG 14 PG	Burndy
8	Shrinking hose Shrinking hose	3HAA 2614-2 5217 1032-4		Bottled shaped Angled

Name	ABB art. no.	Type	Comments
Pin	5217 649-72 5217 649-25 5217 649-70 5217 649-3 5217 649-68 5217 649-10 5217 649-31	24/26 24/26 20/22 20/22 16/20 24/26 16/20	Burndy Machine tooling Burndy Hand tooling Burndy Machine tooling Burndy Hand tooling Burndy Machine tooling Burndy Ground Burndy Ground
Sockets	5217 649-73 5217 649-26 5217 649-71 5217 649-69	24/26 24/26 20/22 16/18	Burndy Machine tooling Burndy Hand tooling Burndy Machine tooling Burndy Machine tooling

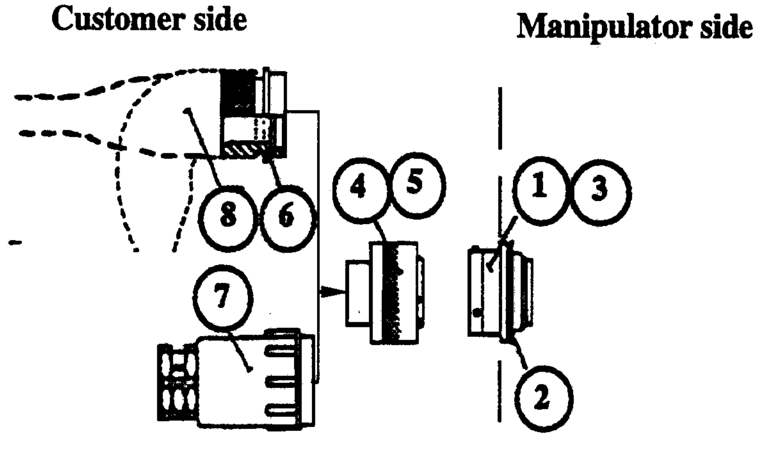

Figure 31 Burndy contacts.

3.8.1 Connection to screw terminal blocks (optional)

Sockets with screwed connections for customer I/O, external safety circuits, customer sockets on the robot, external supply to electronics.

Screwed connection	Industrial connector External connector	Signal identification
XT 3	XS 3	Safeguarded stop 24 V supply sensor
XT 11	XS 11	Digital I/O 1
XT 12	XS 12	Digital I/O 2
XT 13	XS 13	Digital I/O 3
XT 14	XS 14	Digital I/O 4
XT 15	XS 15	Digital I/O 5
XT 16	XS 16	Digital I/O 6
	XS 7	External axes
XT 10	XS 10	Analog I/O
	XS 4	External axes

Examples of socket terminals are shown below.

Incoming cables to the socket terminals must be shielded.
The cables can be led through a flange cover with 12 openings (diameter 23 mm) on the left side of the cabinet; the shielding should be connected at the cable inlet. The cables can also be led in through the roof. The roof panel can be removed and suitable holes drilled for the cable inlets.
The installation should comply with the IP54 (NEMA 12) protective standard.

Interior of rear cabinet wall

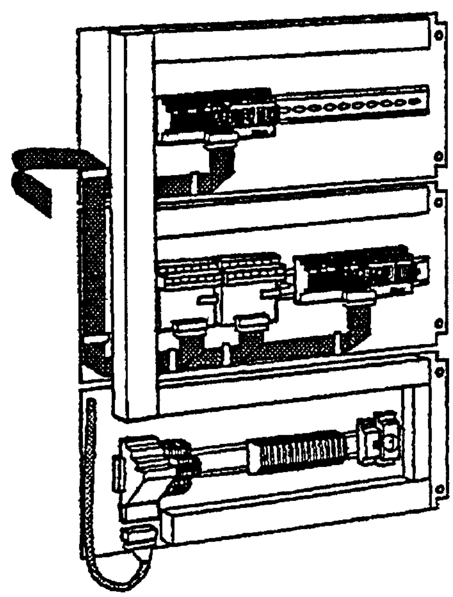

Figure 32 Screw terminal blocks (optional).

3.8.2 Inner connections (optional)

This option is used to connect customer-designed relays or I/O units.

- Customer connections (XS3)
  A 64-pin industrial connector (socket connector), DIN 43652, is located in the cabinet, fixed to one of the bars.
- I/O connections in the form of 40-pin ribbon cable contacts (which is long enough to reach the rear panel of the cabinet).

3.9 The MOTORS ON / MOTORS OFF circuit

To set the robot to MOTORS ON mode, two identical chains of switches must be closed. If any switch is open, the robot will switch to MOTORS OFF mode. As long as the two chains are not identical, the robot will remain in MOTORS OFF mode.
Figure 33 displays a diagram of the available customer connections, AS, MS, GS and ES.

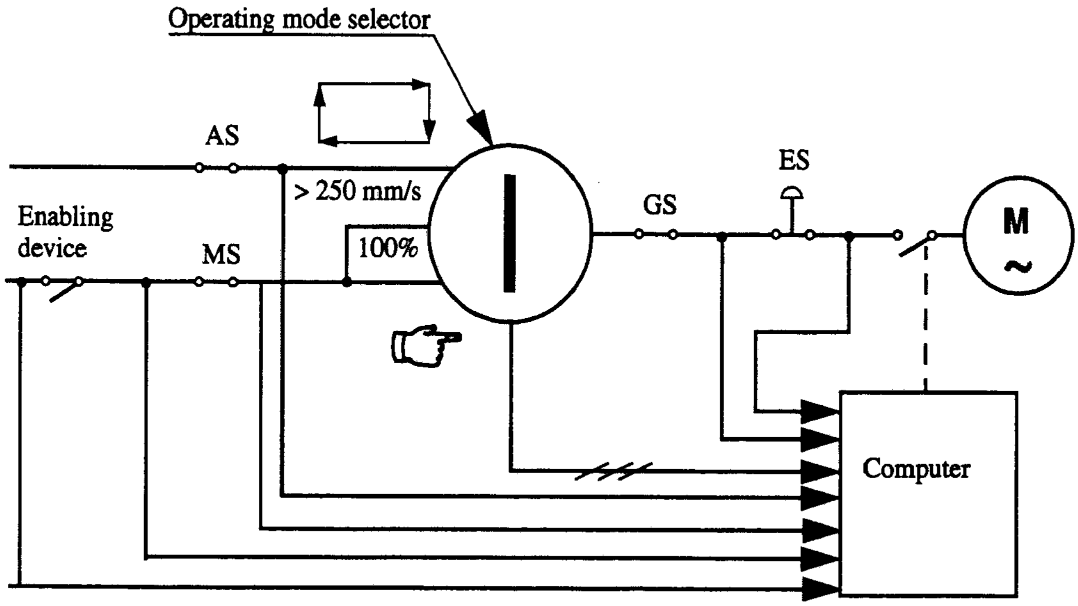

Figure 33 MOTORS ON /MOTORS OFF circuit.

AS = Automatic mode safeguard Stop
MS = Manual mode safeguard Stop
GS = General mode safeguard Stop
ES = Emergency Stop

3.10 Terminal diagram for the MOTORS ON / MOTORS OFF circuit

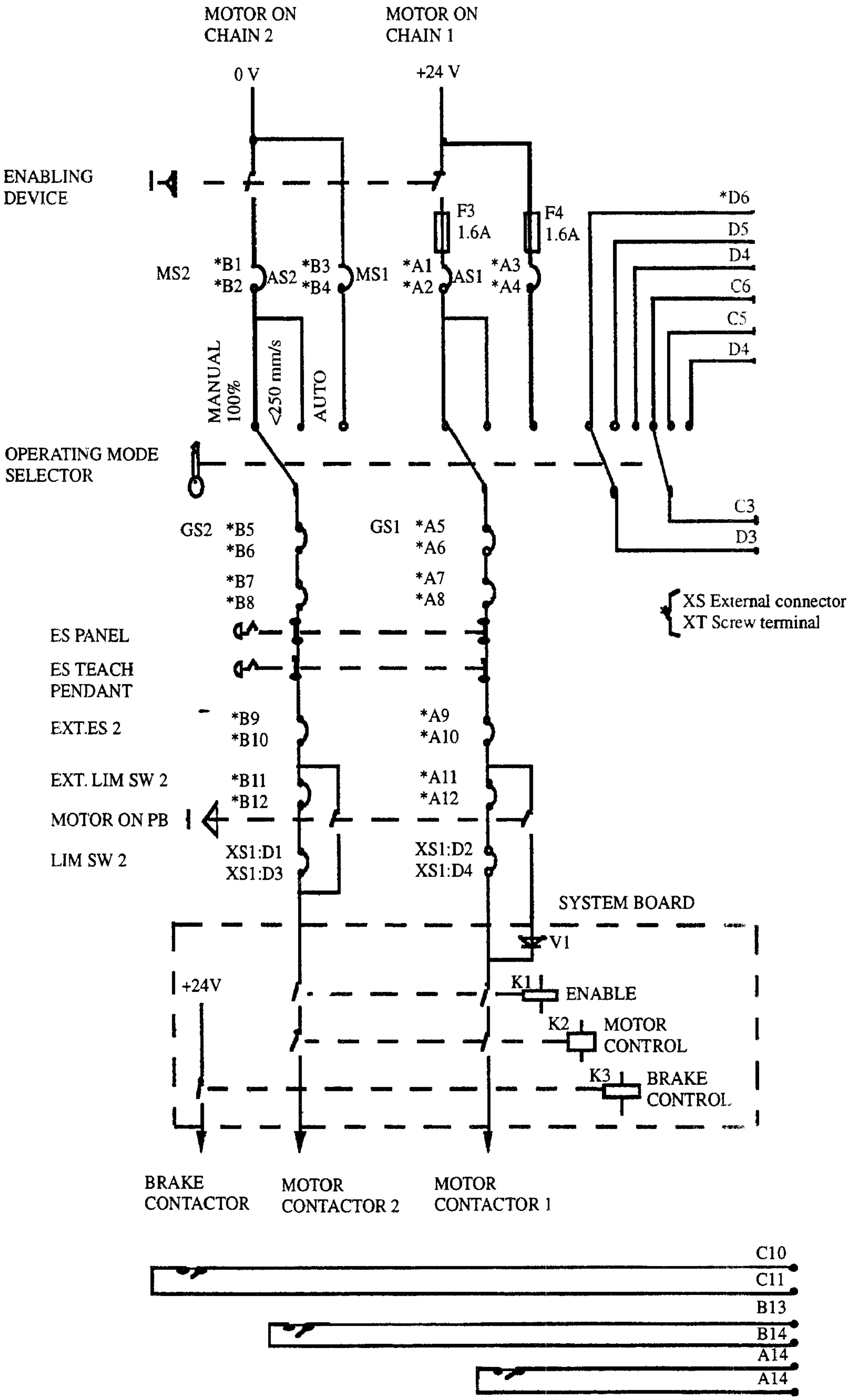

Figure 34 Diagram showing the two-channel chain of operation.

3.11 Terminal table – MOTORS ON / MOTORS OFF circuit

Customer connections: XS3 or XT3.
The signal names refer to the circuit diagram in chapter 12.
If both screw terminal and contact are used see circuit diagram for option 38x and connection table made by the user for option 390.

Signal name	Contact	Comment
ENDEVB	A1	Manual Stop 1
MSTOP 1	A2	Manual Stop 1
ENDEV-N	B1	Manual Stop 2
MSTOP 2	B2	Manual Stop p 2
24V SYS	A3	Automatic Stop 1
ASTOP 1	A4	Automatic Stop 1
0V	B3	Automatic Stop 2
ASTOP 2	B4	Automatic Stop 2
GSTOP 1A	A5	General Stop 1
GSTOP 1B	A6	General Stop 1
GSTOP 2A	B5	General Stop 2
GSTOP 2B	B6	General Stop 2
GSTOP 1B	A7	E stop 1
ES1C	A8	E stop 1
GSTOP 2B	B7	E stop button 2
ES 2C	B8	E stop button 2
ES 1A	A9	Ext. E stop 1
ESTOP 1	A10	Ext. E stop 1
ES 2A	B9	Ext. E stop 2
ESTOP 2	B10	Ext. E stop 2

NB: A7-A8, A9-A10, B7-B8, B9-B10 must be strapped for the emergency stop buttons on the controller to work properly.

ESTOP 1	A11	Ext. limit switch 1
EXT LIM 1	A12	Ext. limit switch 1
ESTOP 2	B11	Ext. limit switch 2
EXT LIM 2	B12	Ext. limit switch 2
POWER OK	C12	Ext. drive units power supply
24 V	C16	
MOFF HOLD 1A	C1	*
MOFF HOLD 1B	C2	*
MOFF HOLD 2	D1	*
0V	D2	*

* If a circuit is open, it will block the robot when in MOTORS OFF mode.
If this function is not used, C1 - C2 and D1 - D2 must be strapped.

3.12 Technical data – MOTORS ON/ OFF circuit

Supply voltage	24V from controller
Supply current	300 mA
Max. permitted resistance in chain of operation	10 ohm
Signal class	Control signal

3.13 Terminal table for external signals

Customer connections: XS3 or XT3.

Signal name	Contact	Comment
EXT MODE COMMON 1	C3	External use of the system's
EXT AUTO 1	C4	operating-mode selector
EXT MAN 1	C5	Chain 1
EXT MAN FS	C6	
EXT MODE COMMON 2	D3	External use of the system's
EXT AUTO 2	D4	operating-mode selector
EXT MAN 2	D5	Chain 2
EXT MAN FS 2	D6	
EXT MON 1A	A13	Motor contactor 1
EXT MON 1B	A14	Motor contactor 1
EXT MON 2A	B13	Motor contactor 2
EXT MON 2B	B14	Motor contactor 2
EXT BRACE A	C10	Brake contactor
EXT BRACE B	C11	Brake contactor

3.14 Technical data – external signals

Max. voltage	48 V DC
Max. current (BRAKE)	9A
Max. current (other)	4A
Max. potential relative to the cabinet earthing	400 V
Signal class	Control signals

3.15 External safety relay

The emergency stop buttons in the controller can operate with external emergency stops if an external safety relay is used.

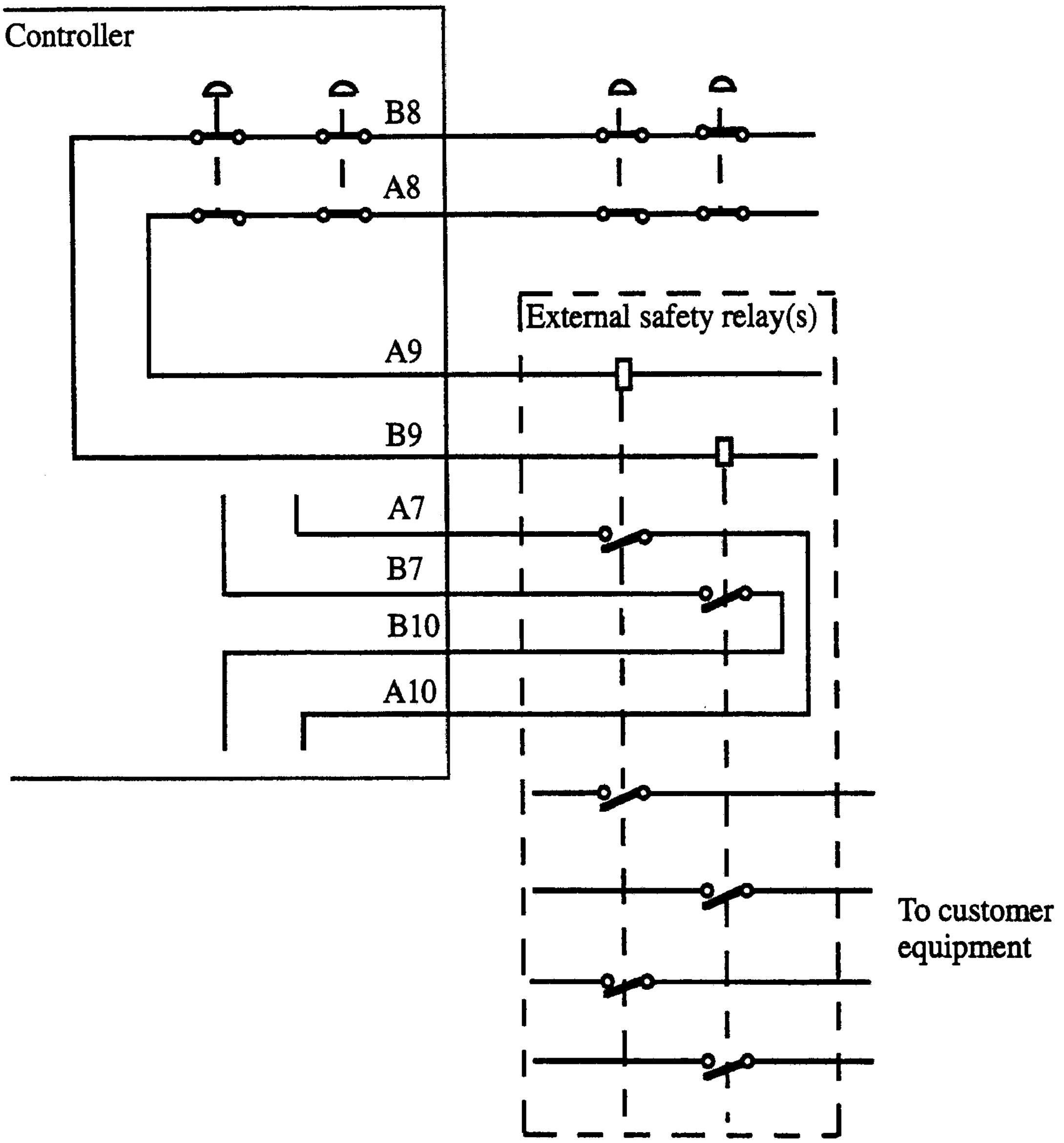

Figure 35 Diagram for using external safety relays.

3.16 Safety stop signals

According to the safety standard ISO/DIS 11161 "Industrial automation systems - safety of integrated manufacturing systems - Basic requirements", there are two categories of safety stops, category 0 and category 1, see below:

The category 0 stop is to be used when, for safety analysis purposes, the power supply to the motors must be immediately switched off, such as when a light curtain, used to protect against entry into the work cell, is passed. This uncontrolled motion stop may require special restart routines if the programmed path changes as a result of the stop.

Category 1 is to be preferred if accepted for safety analysis purposes, such as when gates are used to protect against entry into the work cell. This controlled motion stop takes place within the programmed path, which makes restarting easier.

In the S4 controller, all safety stops are of category 0.
Safety stops of category 1 can be obtained by using the functions HOLD 1 and HOLD 2 together with AS or GS.

3.17 Category 1 – safety stop (smooth stop)

When HOLD 1 and HOLD 2 are connected to a closed input contact and supplied with 24 V, the signal PROG STOP will be sent when the contact opens and, shortly after this, the two relay contacts will open. These relay contacts can be connected to either of the switch positions, MOTORS ON/OFF (see Figure 36). AS or GS are to be used if possible.

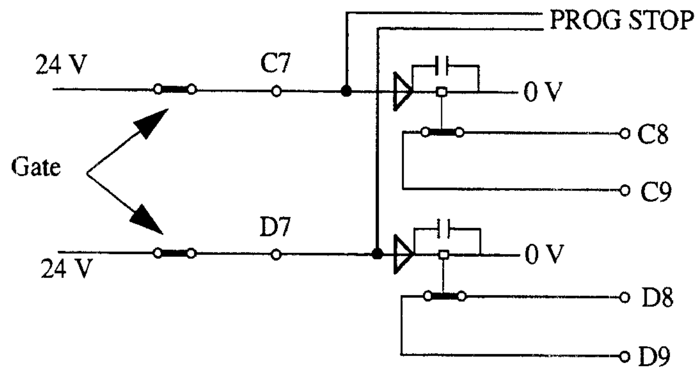

Figure 36 The "smooth stop" function.

Customer connections: XS3 or XT3

Signal name	Contact	Comment
HOLD 1	C7	
HOLD 11	C8	
HOLD 12	C9	
HOLD 2	D7	
HOLD 21	D8	
HOLD 22	D9	

Technical data

Delay (24V from control system)	1.5 seconds
Signal class	Control signals

3.18 Voltage supply to the electronics (24 V I/O)

The robot has a 24 V supply available for internal supplies, 24 V I/O.

This voltage is used internally for the emergency stop chain, the chain of operation and to supply the brakes.
The voltage is not galvanically separated from the rest of the controller voltages.

Technical data

Voltage	24.0 - 26.4 V
Ripple	Max. 0.5 V p-p
Permitted customer load	Max. 4 A
Short-circuit current	Max. 5 A (mean value)

The following terminal table shows the voltages available for customer connections:

	Customer contacts: XS3 or XT3		**Customer contact: XT18 [1)]**
Signal name	**Socket**	**Signal name**	**Socket**
24 V I/O	A15, B15	24VI/O	13,14,15,16
24 V I/O	A16 B16	24VI/O	29,30,31,32
24 V I/O	C16		
0 V I/O	C14, D14	0VI/O	5,6,7,8
0 V I/O	C15, D15	0VI/O	21,22,23,24
0 V I/O	D16		

[1)] I/O supply with fuse strips (2A) is an option which requires internal connections to be made using XT3.

3.19 External supply

An external supply must be used in the following cases:

- When the internal supply is insufficient
- When galvanic insulation is required to prevent interference from ground leakage current
- When galvanic insulation is required due to a potential difference between control signals and the chassis earth
- When galvanic insulation is required for safety reasons
- When there is a risk that major interferences can be carried over into the internal 24 V supply

An external supply is recommended to make use of the advantages offered by the galvanic insulation of the I/O board.

The neutral wire in the external supply must be connected in such a way as to prevent the maximum permitted potential difference in the chassis earth being exceeded. For example, a neutral wire can be connected to the chassis earth of the controller, or some other common earthing point.

Technical data:

Potential difference to chassis earth:	Max. 60 V continuous Max. 500 V for 1 minute
Permitted supply voltage:	19 - 35 V including ripple

3.20 Connection of extra equipment to the manipulator (optional)

Technical data for customer connections

Power supply

Conductor resistance	<0.5 ohm, 0.241 mm2
Max. voltage	250 V AC
Max. current	2 A

Signals

Conductor resistance	<3 ohm, 0,154 mm2
Max. voltage	50 V AC / DC
Max. current	250 mA

Connections (on upper arm)

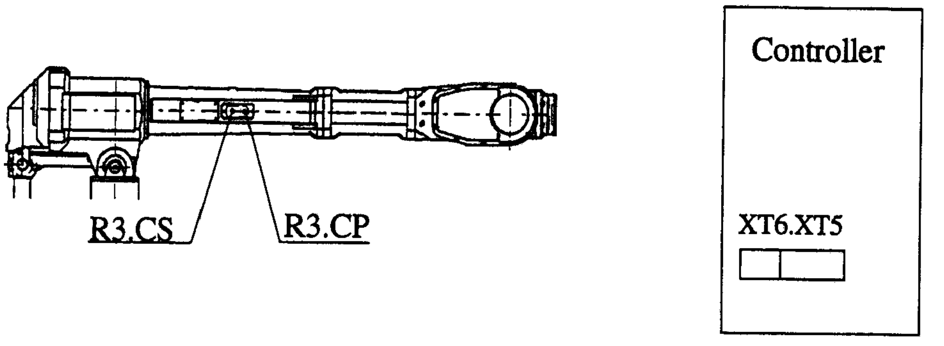

Figure 37 Customer connections on upper arm.

Signal name	Customer contact controller	Customer contact on upper arm		Customer contact on robot base
Power supply				
CPA	XT6.1	R3.CP.A		R1.CP.A
CPB	XT6.2	R3.CP.B		R1.CP.B
CPC	XT6.3	R3.CP.C		R1.CP.C
CPD	XT6.4	R3.CP.D		R1.CP.D
CPE	XT6.5	R3.CP.E		R1.CP.E
CPF	XT6.6	R3.CP.F		R1.CP.F
		R3.CP.G	Ground	R1.CP.G
		R3.CP.H	Key pin	R1.CP.H
CPJ	XT6.7	R3.CP.J		R1.CP.J
CPK	XT6.8	R3.CP.K		R1.CP.K
CPL	XT6.9	R3.CP.L		R1.CP.L
CPM	XT6.10	R3.CP.M		R1.CP.M
Signals				
CSA	XT5.1	R3.CS.A		R1.CS.A
CSB	XT5.2	R3.CS.B		R1.CS.B
CSC	XT5.3	R3.CS.C		R1.CS.C
CSD	XT5.4	R3.CS.D		R1.CS.D
CSE	XT5.5	R3.CS.E		R1.CS.E
CSF	XT5.6	R3.CS.F		R1.CS.F
CSG	XT5.7	R3.CS.G		R1.CS.G
CSH	XT5.8	R3.CS.H		R1.CS.H
CSJ	XT5.9	R3.CS.J		R1.CS.J
CSK	XT5.10	R3.CS.K		R1.CS.K
CSL	XT5.11	R3.CS.L		R1.CS.L
CSM	XT5.12	R3.CS.M		R1.CS.M
CSN	XT5.13	R3.CS.N		R1.CS.N
CSP	XT5.14	R3.CS.P		R1.CS.P
CSR	XT5.15	R3.CS.R		R1.CS.R
CSS	XT5.16	R3.CS.S		R1.CS.S
CST	XT5.17	R3.CS.T		R1.CS.T
CSU	XT5.18	R3.CS.U		R1.CS.U
CSV	XT5.19	R3.CS.V		R1.CS.V
CSW	XT5.20	R3.CS.W		R1.CS.W
CSX	XT5.21	R3.CS.X		R1.CS.X
CSY	XT5.22	R3.CS.Y		R1.CS.Y
CSZ	XT5.23	R3.CS.Z		R1.CS.Z

3.20.1 Connections (on the robot base)

The signals are connected directly to the robot base with one Burndy 12-pin UTG 014-12P (R1.CS).

See the connection table in chapter 3.20.

Cables between the manipulator base and the controller are not supplied.

3.21 I/O (optional)

The controller can be supplied with six I/O boards. Each digital board has 16 inputs, divided up into two groups of eight. Each group can be supplied with 24 volt DC. Each group is galvanically insulated and can be supplied with different voltages, provided that the potential to earth does not exceed the specification. All groups can also be supplied from the same voltage source, e.g. from the controller.

Technical data per group of eight

See Product Specification IRB 6400, chapter 3.10.

3.21.1 Digital connections

Below you will find terminal tables for digital I/O boards when located in their recommended positions in the controller.

Digital I/O slot	Customer contacts XS=external, XT=screw	Customer contact relay unit AP=relay
Slot 1 AP11	XS11 or XT 11	AP21.XT1
Slot 2 AP12	XS12 or XT 12	AP22.XT1
Slot 3 AP13	XS13 or XT 13	AP23.XT1
Slot 4 AP14	XS14 or XT 14	AP24.XT1
Slot 5 AP15	XS15 or XT 15	AP25.XT1
Slot 6 AP16	XS16 or XT 16	AP26.XT1

If both screw terminal and contact are used see circuit diagram for option 38x and connection table made by the user for option 390.

Signal name Function

CONNECTION TABLE – digital I/O board
Customer contacts: XSXX (opt. 31x, ext. conn.), XT XX (opt34x, screw terminal), AP XX (opt.37x, relay unit)

Signal name	Function	XS XX	XT XX	AP XX	XT=screw
INPUT CH 1		B3	2	XT1.201	
INPUT CH 2		C3	3	XT1.202	
INPUT CH 3		D3	4	XT1.203	
INPUT CH 4		A4	5	XT1.204	
INPUT CH 5		B4	6	XT1.205	
INPUT CH 6		C4	7	XT1.206	
INPUT CH 7		D4	8	XT1.207	
INPUT CH 8		A5	9	XT1.208	
U1-	0V, supply group 1	B5	10	XT1.U1-	
INPUT CH 9		D5	12	XT1.209	
INPUT CH 10		A6	13	XT1.210	
INPUT CH 11		B6	14	XT1.211	
INPUT CH 12		C6	15	XT1.212	
INPUT CH 13		D6	16	XT1.213	
INPUT CH 14		A7	17	XT1.214	
INPUT CH 15		B7	18	XT1.215	
INPUT CH 16		C7	19	XT1.216	
U2-	0V, supply group 2	D7	20	XT1.U2-	
U3+	24 V, supply group 3	A8	21	XT1.+	
OUTPUT CH 1		B8	22	XT1.14(12)	XT1.11 1)
OUTPUT CH 2		C8	23	XT1.24(22)	XT1.21
OUTPUT CH 3		D8	24	XT1.34(32)	XT1.31
OUTPUT CH 4		A9	25	XT1.44(42)	XT1.41
OUTPUT CH 5		B9	26	XT1.54(52)	XT1.51
OUTPUT CH 6		C9	27	XT1.64(62)	XT1.61
OUTPUT CH 7		D9	28	XT1.74(72)	XT1.71
OUTPUT CH 8		A10	29	XT1.84(82)	XT1.81
U3-	0V, supply group 3	B10	30	XT1.-	
U4+	24 V, supply group 4	C10	31	XT1.+	
OUTPUT CH 9		D10	32	XT1.94(92)	XT1.91
OUTPUT CH 10		A11	33	XT1.104(102)	XT1.101
OUTPUT CH 11		B11	34	XT1.114(112)	XT1.111
OUTPUT CH 12		C11	35	XT1.124(122)	XT1.121
OUTPUT CH 13		D11	36	XT1.134(132)	XT1.131
OUTPUT CH 14		A12	37	XT1.144(142)	XT1.141
OUTPUT CH 15		B12	38	XT1.154(152)	XT1.151
OUTPUT CH 16		C12	39	XT1.164(162)	XT1.161
U4-	0V, supply group 4	D12	40	XT1.-	

1) XT1.14 normally open contact
(12) normally closed contact
11 common

3.22 Analog I/O (optional)

An analog I/O board can also be fitted into the first I/O slot. This will reduce the maximum number of digital I/O boards permitted from 6 to 5. There is a mixed board for analog inputs/outputs, with:

- 4 inputs for 0- ±10 V.
- 3 voltage outputs for 0- ±10 V.
- 1 current output for 0- ±20 mA.

The inputs and outputs belong to a common group, galvanically insulated from the controller electronics. The analog I/O board is positioned in the first I/O slot.

The analog inputs and outputs in the robot can be supplied with power from an internal source, ± 15 V from the controller, or from an external source ± 15 V. If an internal ± 15 V supply is used, there will be no galvanic insulation between the analog inputs/outputs and the electronics in the controller.

Technical data

See Product Specification IRB 6400, chapter 3.10.

External ± 15 V supply

Voltage	14.3- 15.7 V
Max. current req. for full load	+15 V: 240 mA -15 V: 130 mA
Max. potential relative to cabinet earthing	500V for max. 1 minute 50 V continuous
Signal class inputs/outputs and external supply:	Measuring signals

3.22.1 Analog connections

The connections between physical inputs/outputs and ports can be seen from the following table:

CONNECTION TABLE – analog I/O board
Customer contacts: XS10 or XT10

Signal name	Function	Socket XS10	Socket XT10	Comment
INPUT CH 1	0- ±10 V max. 10 Hz	B3	2	
INPUT CH 2	0- ±10 V max. 10 Hz	A3	1	
INPUT CH 3	0- ±10 V max. 100 Hz	D3	4	
INPUT CH 4	0- ±10 V max. 100 Hz	C3	3	
0 V	Return conduct. cable analog inp.	B4	6	Internally connected with A4(5)
0 V	Return conduct. cable analog inp.	A4	5	Internally connected with B4(6)
OUTPUT CH 1	0- ±10 V min. 8 kohm	D4	8	
OUTPUT CH 2	0- ±10 V min. 4 kohm	C4	7	
OUTPUT CH 3	0- ±10 V min. 2 kohm	B5	10	
OUTPUT CH 4	0- ±20 mA max. 450 ohm	D5	12	
0 V	Return conduct. cable analog outp.	A5	9	Internally connected with C5(11)
0 V	Return conduct. cable analog outp.	C5	11	Internally connected with A5(9)
EXT + 15 V	External supply +15 V	B6	14	+15 V supply, analog I/O Internally connected with A6(13)
EXT + 15 V	External supply +15 V	A6	13	+15 V supply analog I/O Internally connected with B6(14)
EXT -15 V	External supply -15 V	B7	18	-15 V supply analog I/O Internally connected with A7(17)
EXT -15 V	External supply -15 V	A7	17	-15 V supply analog I/O Internally connected with B7(18)
0 V	0 V external supply	D6	16	0 V analog I/O Internally connected with C6(15)
0 V	0 V external supply	C6	15	0 V analog I/O Internally connected with D6(16)

The following applies for internal supplies:
There is no galvanic insulation in the controller electronics.
The internal + 15 V, -15 V and 0 V signals are located in the same contact (doubled for internal interconnection) and must be strapped to the corresponding terminal for external voltages.
The internal + 15 V, -15 V and 0 V signals may only be used to supply voltage to the analog I/O board.

INT + 15 V	Internal supply +15 V	D11	36	Strapped to B6 and/or A6(14,13)
INT + 15 V	Internal supply +15 V	C11	35	Strapped to B6 and/or A6(14,13)
INT -15 V	Internal supply -15 V	B12	38	Strapped to B7 and/or A7(18,17)
INT -15 V	Internal supply -15 V	A12	37	Strapped to B7 and/or A7(18,17)
0 V	0 V internal supply	D12	40	Strapped to D6 and/or C6(16,15)
0 V	0 V internal supply	C12	39	Strapped to D6 and/or C6(16,15)

3.23 Combined I/O (option)

A combined I/O board can be located at board position 1, a board with both digital and analog functions:

- 16 digital inputs
- 16 digital outputs
- 2 voltage outputs for 0 - +10 V

The combined I/O board has 16 digital inputs divided into two groups of 8, and 16 digital outputs divided into two groups of 8. Each group is intended to be supplied with 24 V DC. All groups are galvanically isolated and may be supplied from the cabinet 24 V I/O supply and, as long as the potential relative to system ground is not too high, also from a separate voltage.

The two analog outputs belong to a common group which is galvanically isolated from the electronics of the controller. The combined I/O is located at board position 1, but is connected separately for digital and analog parts.

The two analog outputs in the robot system can be supplied with an internal + 15 V voltage from the controller or with an external + 15 V voltage. When the internal + 15 V voltage is used, there is no galvanic isolation between the analog outputs and the controller electronics.

Technical data – digital input/output for each group of 8 channels

Inputs:	See digital I/O.
Outputs:	See digital I/O

Technical data – analog output

Outputs:	See analog I/O
External +15 V supply	See analog I/O

3.23.1 Combined connections

The following are connection tables for combined I/O boards, located as recommended in the controller.

Signal name	Function	Terminal XS 11	Terminal XT 11	Remark
INPUT CH 1		B3	2	Logical input 1
INPUT CH 2		C3	3	Logical input 2
INPUT CH 3		D3	4	Logical input 3
INPUT CH 4		A4	5	Logical input 4
INPUT CH 5		B4	6	Logical input 5
INPUT CH 6		C4	7	Logical input 6
INPUT CH 7		D4	8	Logical input 7
INPUT CH 8		A5	9	Logical input 8
U1-	0V, supply group 1	B5	10	
INPUT CH 9		D5	12	Logical input 9
INPUT CH 10		A6	13	Logical input 10
INPUT CH 11		B6	14	Logical input 11
INPUT CH 12		C6	15	Logical input 12
INPUT CH 13		D6	16	Logical input 13
INPUT CH 14		A7	17	Logical input 14
INPUT CH 15		B7	18	Logical input 15
INPUT CH 16		C7	19	Logical input 16
U2-	0V, supply group 2	D7	20	
U3+	24 V, supply group 3	A8	21	
OUTPUT CH 1		B8	22	Logical output 1
OUTPUT CH 2		C8	23	Logical output 2
OUTPUT CH 3		D8	24	Logical output 3
OUTPUT CH 4		A9	25	Logical output 4
OUTPUT CH 5		B9	26	Logical output 5
OUTPUT CH 6		C9	27	Logical output 6
OUTPUT CH 7		D9	28	Logical output 7
OUTPUT CH 8		A10	29	Logical output 8
U3-	0V, supply group 3	B10	30	
U4+	24 V, supply group 4	C10	31	
OUTPUT CH 9		D10	32	Logical output 9
OUTPUT CH 10		A11	33	Logical output 10
OUTPUT CH 11		B11	34	Logical output 11
OUTPUT CH 12		C11	35	Logical output 12
OUTPUT CH 13		D11	36	Logical output 13
OUTPUT CH 14		A12	37	Logical output 14
OUTPUT CH 15		B12	38	Logical output 15
OUTPUT CH 16		C12	39	Logical output 16
U4-	0V, supply group 4	D12	40	

CONNECTION TABLE – analog channels
User contact: XS10 or XT10

Signal name	Function	Terminal XS10	Terminal XT10	Remarks
INPUT CH 1	0- ±10 V	D3	4	Internal testing input
INPUT CH 2	0- ±10 V	C3	3	Internal testing input
0 V	Return testing input	B3	2	Internally connected with A3(6)
0 V	Return testing input	A3	1	Internally connected with C3(5)
OUTPUT CH 1	0- ±10 V min. 2 kohm	D4	8	
OUTPUT CH 2	0- ±10 V min. 2 kohm	C4	7	
0 V	Return analog output	B5	10	
0 V	Return analog output	D5	12	
EXT + 15 V	External supply +15 V	B6	14	+15 V supply of analog I/O Internally connected with A6(13)
EXT + 15 V	External supply +15 V	A6	13	+15 V supply of analog I/O Internally connected with B6(14)
EXT -15 V	External supply -15 V	B7	18	-15 V supply of analog I/O Internally connected with A7(17)
EXT -15 V	External supply -15 V	A7	17	-15 V supply of analog I/O Internally connected with B7(18)
0 V	0 V external supply	D6	16	0 V analog I/O Internally connected with C6(15)
0 V	0 V external supply	C6	15	0 V analog I/O Internally connected with D6(16)

The following applies for internal supplies:
There is no galvanic isolation in the controller electronics. The internal + 15 V, - 15 V and 0 V are located in the same contact (doubled for internal connectors) and must be strapped to the corresponding terminal for external voltages. The internal + 15 V, - 15 V and 0 V may only be used to supply voltage to the analog I/O board.

INT + 15 V	Internal supply +15 V	D8	24	Strapped to B6 and/ or A6(14,13)
INT + 15 V	Internal supply +15 V	C8	23	Strapped to B6 and/ or A6(14,13)
INT -15 V	Internal supply -15 V	B8	22	Strapped to B7 and/ or A7(18,17)
INT -15 V	Internal supply -15 V	A8	21	Strapped to B7 and/ or A7(18,17)
0 V	0 V internal supply	D7	20	Strapped to D6 and/ or C6(16,15)
0 V	0 V internal supply	C7	19	Strapped to D6 and/ or C6(16,15)

3.24 Sensor interface

3.24.1 General

The following sensor types can be connected:

Sensor type	*Signal level*	
Digital one bit sensors	High	"1"
	Low	"0"
Digital two bit sensors	High	"01"
	No signal	"00"
	Low	"10"
	Error status	"11" (stop program running)
Analogue sensors	-10 V to +10 V	

The sensors can be used for the following functions. The sensors are connected to the controller via inputs on the circuit boards in accordance with the table:

Sensor	*Function*	*Connected via*
Digital one bit sensor	Distance searching	System board
Digital two bit sensor	Distance searching	Digital I/O board
	Speed control	Digital I/O board
Digital two bit sensor	Distance searching	Digital I/O board
	Direction searching	Digital I/O board
	Speed control	Digital I/O board
	Contour tracking	Digital I/O board
Analogue sensor	Distance searching	Analogue board
	Direction searching	Analogue board
	Speed control	Analogue board
	Contour tracking	Analogue board

3.24.2 Connection of digital sensors

A digital sensor can be connected to any of the inputs. Both bits in a two bit sensor are to be connected to the input channel within the same 1-8 or 8-16 bit group. The connection is made to two adjacent input channels, with the lowest bit connected to the input channel with the lower number.

Up to three one-bit sensors for distance searching can be connected to the sensor inputs of the system board. These inputs have a faster response time, 12 ±5ms compared to 12 (- 5ms + 15ms) for the digital inputs. The inputs are supplied with +24 V voltage in the same way as for digital I/O.

NOTE!
Sensor inputs on the system board cannot cope with input signals with pulse widths between 0.2 and 0.4 ms. It is therefore important to use transducers with hysteresis, suitable for industrial environments.

Certain proximity transducers can give showers of pulses where they are at the change-over point or if the supply voltage is disturbed.

CONNECTION TABLE – analogue channels
User contact: XS10 or XT10

Signal name	Function	Terminal	Remarks
SENSOR 1	See User´s Guide	D10	logical input 237
SENSOR 2	See User´s Guide	D11	logical input 238
SENSOR 3	See User´s Guide	D12	logical input 239
0 V SENSOR	0 V, supply to SENSOR inputs	D13	

3.24.3 Connection of analogue sensors

An analogue sensor can be connected to any analogue input on the analogue I/O board.

3.25 RIO (Remote Input Output), remote I/O for Allen Bradly PLC

The robot can be equipped with one RIO-board. The RIO-board can be programmed for 32, 64, 96 or 128 digital inputs and outputs. The board should be positioned to the left of the last I/O-board in the frame, which gives the most freedom to choose configuration on the first 16 outputs.

On the front of the board there are 32 LEDs. The first 16 are used to indicate status for the first 16 inputs on the RIO-board. The other 16 are for indication of the first 16 outputs.

The RIO-board is to be connected to an Allen Bradly PLC using a screened, two conductor cable.

For configuration of the RIO-board, see the User's Guide, System Parameters.

Connection table:

Customer terminals: XT17

Signal name	Terminal
LINE 1(blue)	1
LINE 2(clear)	2

This product incorporates a communications link which is licensed under patents and proprietary technology of Allen-Bradly Company, Inc. Allen Bradly Company, Inc. does not warrant or support this product. All warranty and support services for this product are the responsibility of and provided by ABB Flexible Automation.

3.26 External operator's panel

All necessary components are supplied, except for the external enclosure.

The assembled panel must be installed in a housing which satisfies protection class, IP 54, in accordance with IEC 144 and IEC 529.

For how to prepare the external enclosure for assembly, see below.

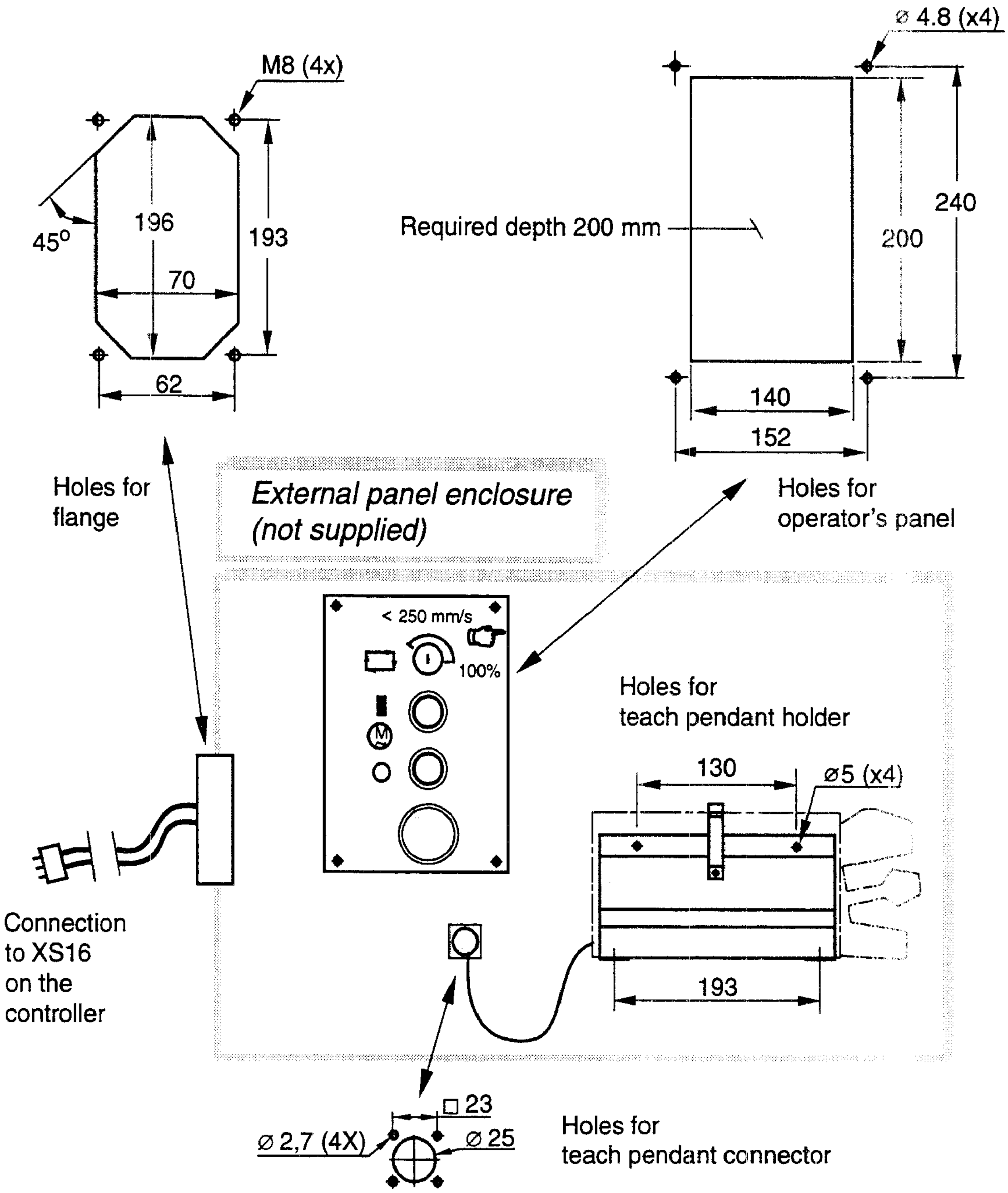

Figure 38 Required preparation of external panel enclosure.

3.27 Serial communication

The robot has four serial channels, three RS232 and one RS485, which can be used by the customer to communicate with printers, terminals, computers and other equipment.

The serial channels are:

- SIO1-
  RS 232 with RTS-CTS-control and support for XON/XOFF,
  transmission speed 300 - 19200 baud.
- SIO2-
  RS 232 no RTS-CTS-control, support for XON/XOFF,
  transmission speed 300 - 38400 baud.
- SIO3-
  RS 232 no RTS-CTS-control, support for XON/XOFF,
  transmission speed 300 - 19 200 baud.
- SIO4-
  RS 485 full duplex TXD4, TXD4, RXD4, RXD4-N,
  transmission speed 300 - 38 400 baud.

Print-outs

To use the print-out function, the following requirements must be fulfilled:

1. A printer/terminal connected to the contact XB2 (25-pin D-sub) at the front of the controller.

   The signals in the connector are:

2	= REC	
3	= SEND	
4	= RTS	jumpered with 5(CTS)
5	= CTS	jumpered with 4(RTS)
1	= GND	Ground, shielded

Signal class: Data communication signals.

The cable between the printer and the controller must be shielded.

2. The parameters for the robot must be correctly defined – see the chapter on System Parameters in the User's Guide.

Other data ports

For information on how to use the other data ports in the robot, see the circuit diagram and the chapter on System Parameters in the User's Guide.

4 External Axes

4.1 General

External axes may be defined with either an internal drive unit or external drive units. The following table shows the difference:

	Internal drive unit	External drive unit(s)
Max. no. of axes[1]	6[2]	6
Drive unit	AC drive in controller	External drive unit with speed reference from the controller
Measurement system	Absolute	Absolute or relative
Motor	4- or 6-pole synchronous motor, of IRB type	DC or AC, depending on drive unit
Connection for monitoring motor temperature	Yes	No (external drive system may have the feature)

[1] Max 6 external axes can be controlled simultaneously.

[2] Only one at the time by means of the common drive function.

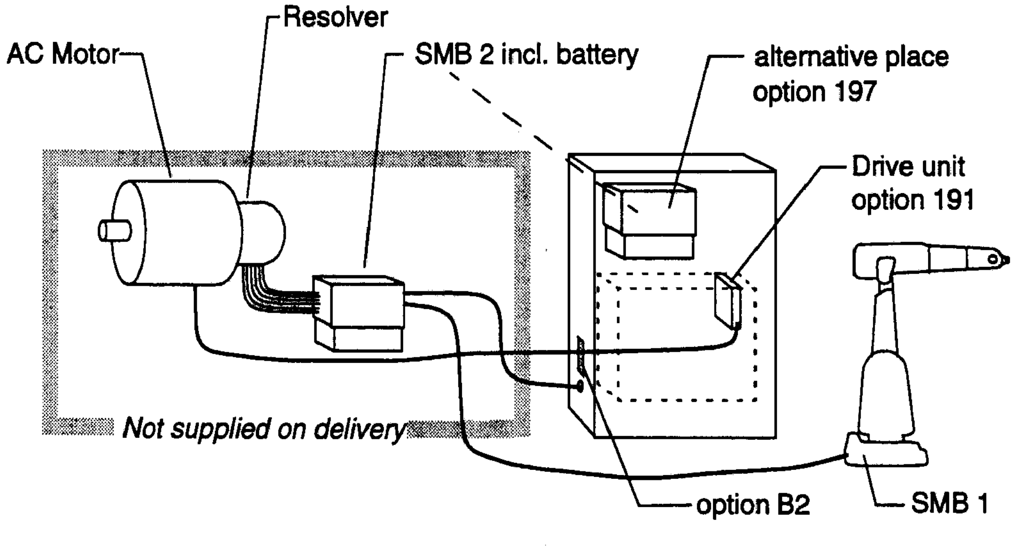

Figure 39 Signals for internal drive unit.

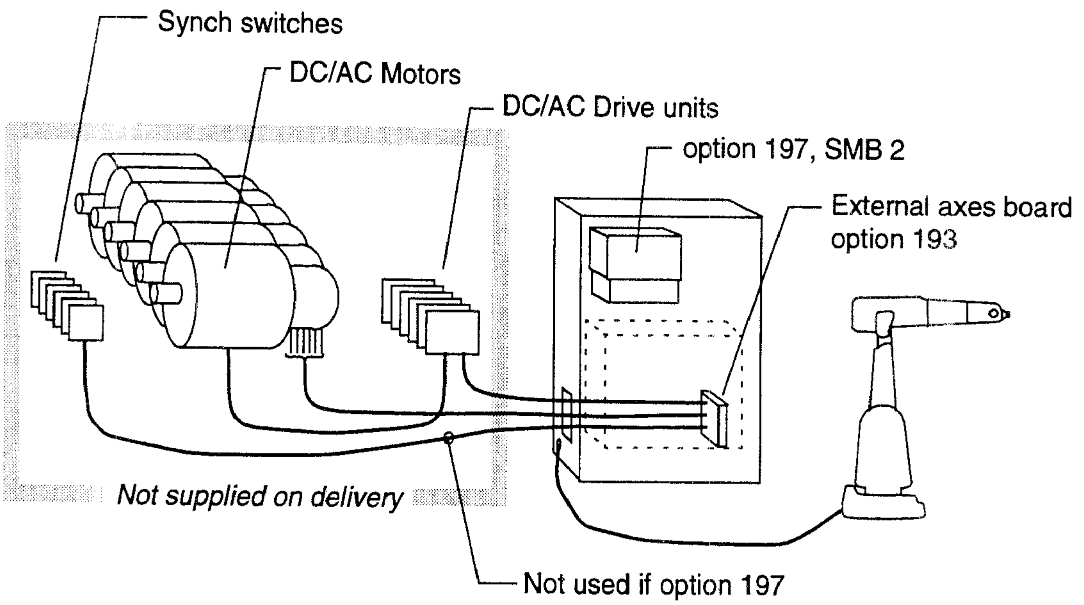

Figure 40 Signals for external drive units.

4.2 Necessary equipment

One of the following types of equipment is required to control external axes:

- Internal drive unit of type C or T fitted to the drive unit rack. Serial measurement board with battery located either outside the controller (i.e. track motion) or inside the controller. A 4- or 6-pole AC synchronous motor, type IRB. One resolver of IRB type per motor for position control.
  If the function common drive is to be used, a contactor unit for motor selection is required.
- For external drive units an external axes board can be fitted in the controller. From this board speed references for 6 axes are supplied.
  Serial measurement board and battery located either inside the controller or close to the resolver(s) for absolute measurement. One resolver of IRB type for position control. For relative measurement the serial measurement board can be replaced by synch switches. The resolver(s) are then connected to the external axes board.

The cabling must comply with signal class "measurement signals" (see chapter 3.1, Signal classes).

It is very important to have a low noise level on the measurement signals from the external axes. Otherwise the revolution counter will be lost. Thus it is very important to have correct shielding and ground connections of cables, measurement boards and resolvers.

The cabinet for external drive units and/or external serial measurement board must comply with enclosure class IP 54, in accordance with IEC 144 and IEC 529.

4.2.1 Technical data

Resolver	Art.no. 5766 388-5, size 11, equal to resolver in 2400/3400 or integrated in motor of IRB type.
Motor to resolver gear ratio	1:1, direct drive

Sync. switches – limit switches

Max. voltage	35 VDC
Load	min. 10 mA

Motor – (internal drive unit)

Technical data	ABB Production Development can supply further information.

Status signals from the controller (EXT MOTORS ON 1, 2, EXT BRAKE)

Max. supply voltage	48 VDC
Max. continuous current	1 A
Max. potential in relation to ground	400 V
Signal class according to section 3.1	Control signals

4.3 Signal description

4.3.1 Common signals

LIM SW EXT (1-7)

This signal is common to all limit-position switches throughout the system. All limit switches are connected in ***series***. An open circuit indicates that the external axis has reached the limit of its working range, and this will trip the safety chains in the robot. The signals must be strapped if not used. With the MOTORS ON button in the controller depressed, the axis can be jogged past the limit-position switches back into the working range.

Note The dual safety chains require an intermediate relay if a single limit switch is used.

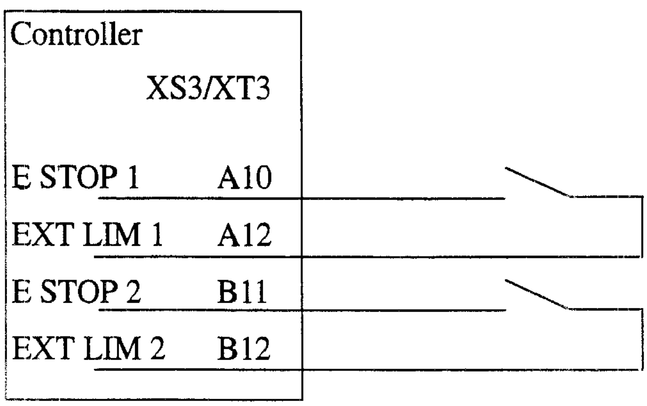

Figure 41 Signals for the limit switches.

PTC M7.0 V PTC M7

This signal monitors the temperature of the motor. The motor's PTC resistor is connected in a closed loop. An open loop indicates that the temperature of the motor is too high. If a temperature sensor is not used, the circuit must be strapped.

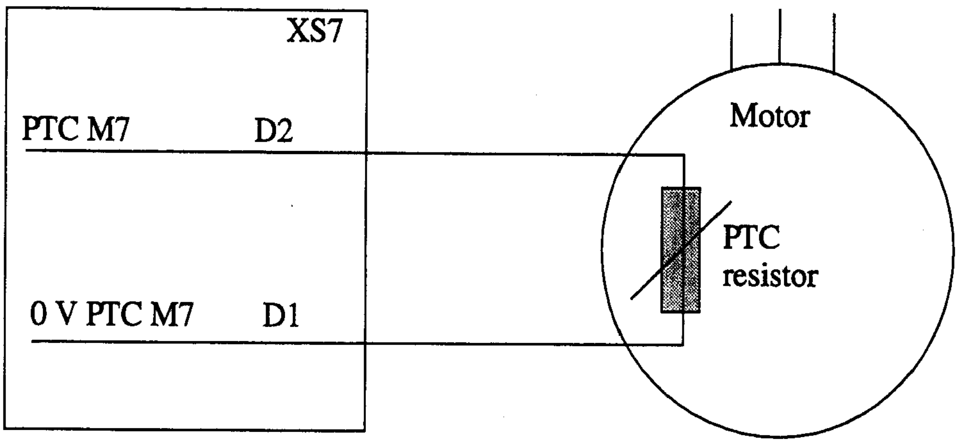

Figure 42 Monitoring the motor temperature.

Power supply
+ 24 V I/O, 0 V

An internal 24-V voltage from the controller. Provided that the permissible load is not exceeded, the voltage can be used for the following:

- To supply the synch. switches.
- To supply external brakes

X FINE (7-12), Y FINE (7-12), 0 V

The X FINE, Y FINE and 0 V signals are used to connect resolvers to the controller.

SYNC (7-12)

Digital + 24 V input from synch. switch(es). The input can be supplied with +24 V I/O or an external +24 V voltage.

EXC, 0 VEXC

Common supply for all resolvers.

Connection – internal 24 V supply

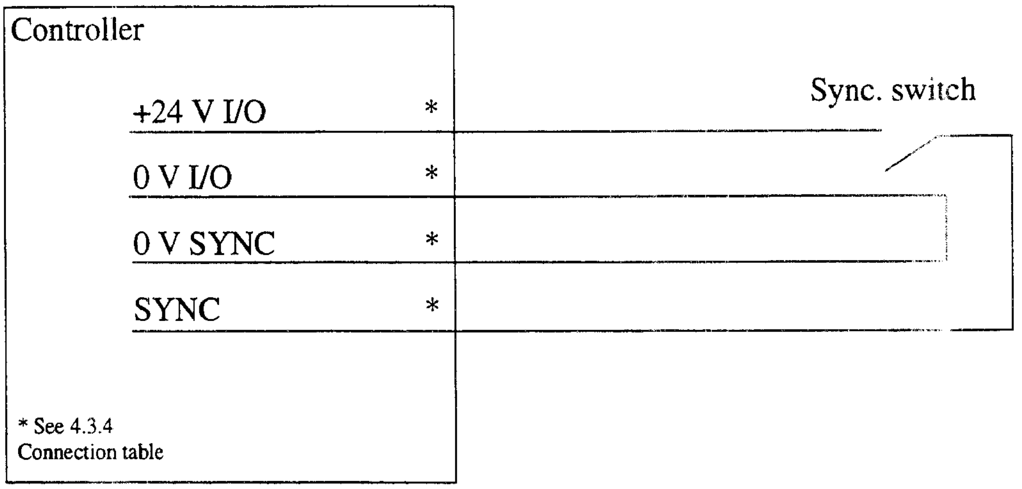

Connection in noisy environment – external 24 V supply

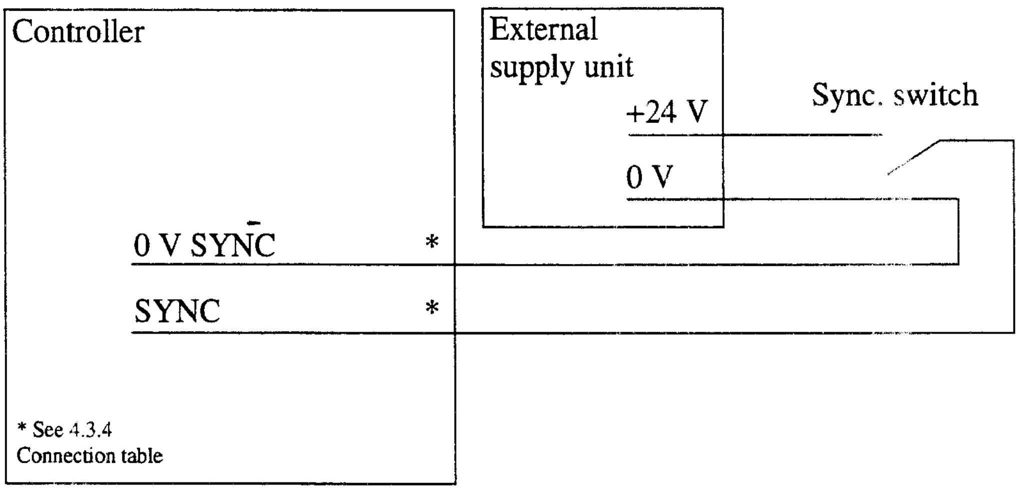

Connection of resolvers

EXC supplies the rotors of all resolvers in parallel via contact XS4(or XS 23).

Each resolver contains two stators and one rotor, connected as shown in Figure 43.

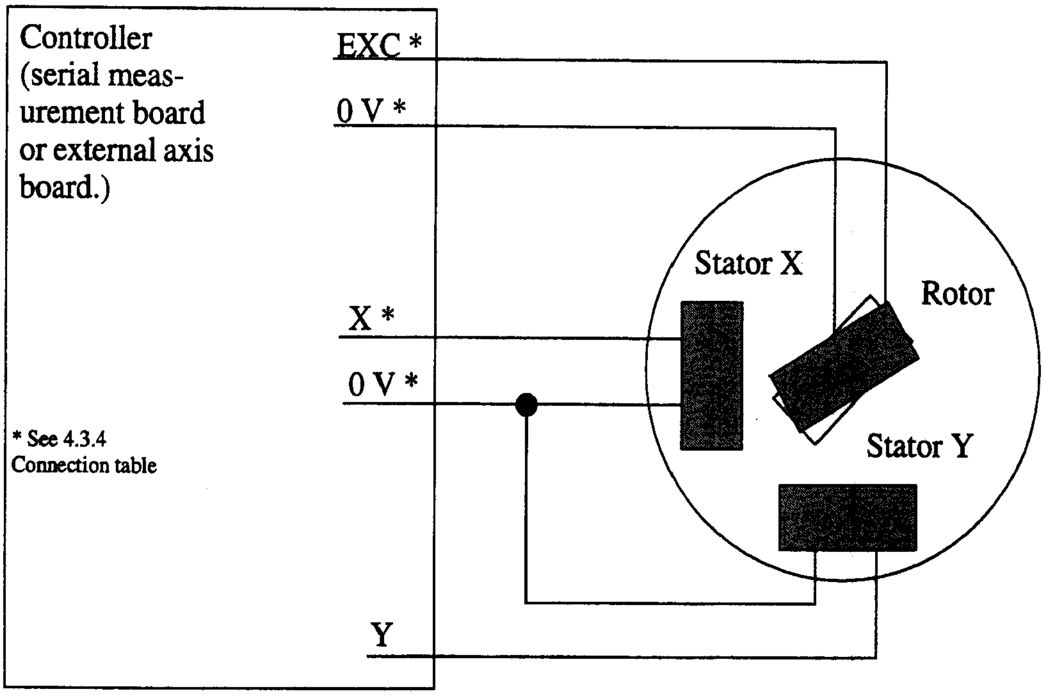

Figure 43 Connections for resolvers.

4.3.2 Motor connection to internal drive unit

M7R, M7S, M7T:
Motor current R-phase (U-phase), S-phase (V-phase) and T-phase (W-phase) respectively.

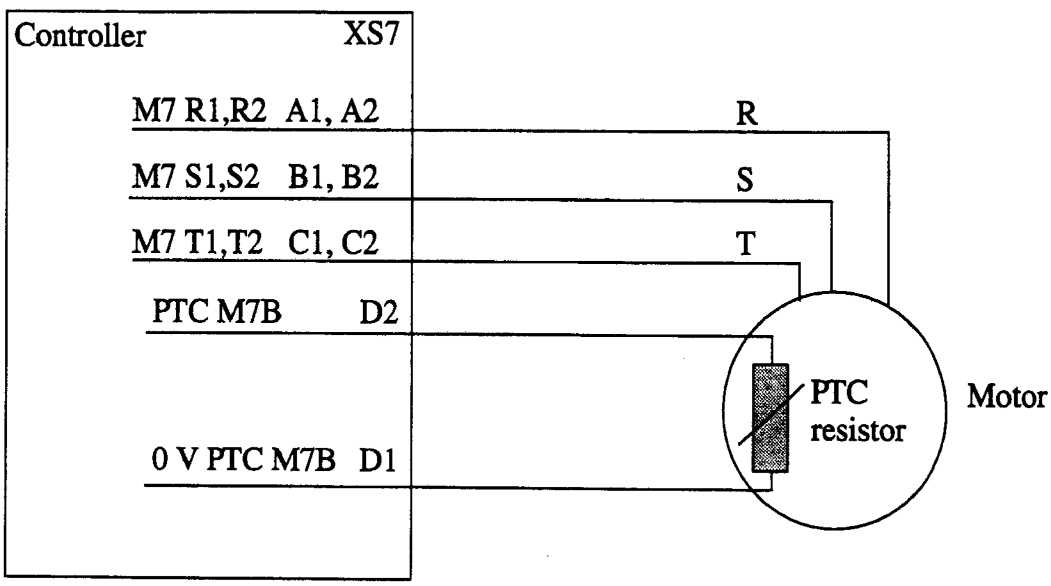

Figure 44 Connection for internal drive unit.

Connection table – internal drive unit

User connector XS7

LIM 1 M7	A4	A4-A5, B4-B5 strapped if not used
LIMIT 1	A5	
LIM 2 M7	B4	
LIMIT 2 M7	B5	
PTC M7B	D2	D2-D1 strapped if not used
0 V PTC M7	D1	
24 V I/O(BRAKE PB M7)	A10	
0 V BRAKE M7	B10	
BRAKE RELEASE M7	A9	
M7R1, M7R2	A1, A2	
M7S1, M7S2	B1, B2	
M7T1, M7T2	C1, C2	

4.3.3 External drive units

In addition to the signals described in chapter 4.3.1, the following control signals must be connected between the controller and external drive units:

EXT MON 1A-1B and 2A-2B

Orders the common logic for external axes in the controller to switch to the MOTORS ON/MOTORS OFF status. A closed loop indicates that the controller is in MOTORS ON mode (voltage to motors). An open loop indicates MOTORS OFF mode (no motor voltage).

EXT BRAKE

Orders BRAKE ON/BRAKE OFF from the controller. A closed loop indicates that the robot brakes are not mechanically engaged, i.e. the motors keep the external axes in position.
The timing between motor torque and brake torque should be observed, especially when external axes are affected by gravity, to prevent unwanted movements.

Incorrectly defining the system parameters for brakes or external axes may cause damage to the robot or injure someone.

Internal +24 V supply

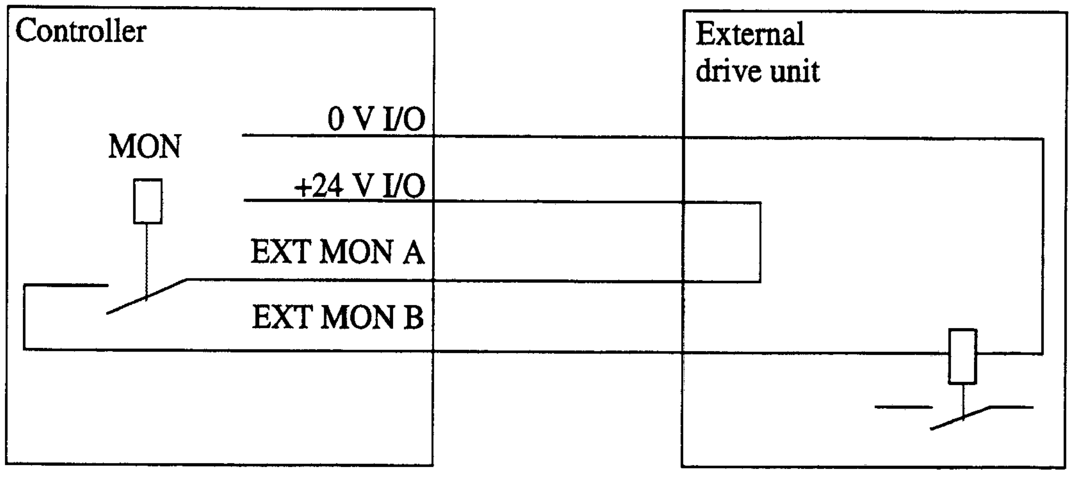

External +24 V supply

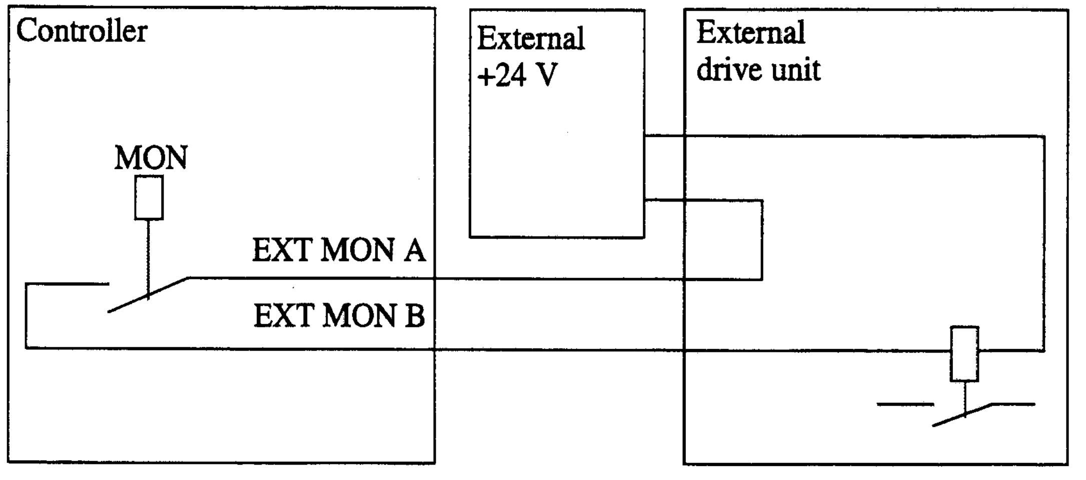

Note:
For safety reasons, the power supply to the external motor must be switched off when the robot is in the MOTORS OFF mode.

VREF (7-12), 0 V VREF (7-12)

Analog reference signal, -10 - +10 V, for the speed reference from the controller to the external drive unit. The system parameters define the max. voltage in the range -9.4 - +9.4 V that corresponds to the defined max. speed in the range -3000 - +3000 rpm. See System Parameters in the User's Guide.

4.3.4 Connection tables

User connector	*XS3*	
ESTOP 1	A11	
EXT LIM 1	A12	
ESTOP 2	B11	A11-A12 and B11-B12 strapped if not used
EXT LIM 2	B12	
24 V I/O	A15	
POWER OK	C12	C12-A15 strapped if not used
24 V I/O	A16	
0 V	D16	
EXT MON 1A	A13	
EXT MON 1B	A14	
EXT MON 2A	B13	
EXT MON 2B	B14	
EXT BRAKE A	C10	
EXT BRAKE B	C11	

XS4 External axes board
XS23 Internal serial measurement board. For resolver connections directly to serial measurement board, see Circuit diagram.

User connector	*XS4*	*X23*
EXC	C6, C7	A1, A8
0 V EXC	D6, D7	A2, A9
0 V SYNC	C2	
X FINE 7	C8	B1
Y FINE 7	D8	C1
0 V FINE 7	B9	B2(X), C2(Y)
0 V REF 7	B3	
VREF 7	A3	
SYNC 7	A1	
X FINE 8	C10	B3
Y FINE 8	D10	C3
0 V FINE 8	D9	B4(X), C4(Y)
0 V REF 8	D3	
VREF 8	C3	
SYNC 8	B1	
X FINE 9	C11	B5
Y FINE 9	D11	C5
0 V FINE 9	B12	B6(X), C6(Y)
0 V REF 9	B4	
VREF 9	A4	
SYNC 9	C1	

X FINE 10	C13	B8
Y FINE 10	D13	C8
0 V FINE 10	D12	B9(X), C9(Y)
0 V REF 10	D4	
VREF 10	C4	
SYNC 10	D1	
X FINE 11	C14	B10
Y FINE 11	D14	C10
0 V FINE 11	B15	B11(X), C11(Y)
0 V REF 11	B5	
VREF 11	A5	
SYNC 11	A2	
X FINE 12	C16	B12
Y FINE 12	D16	C12
0 V FINE 12	D15	B13(X), C13(Y)
0 V REF 12	D5	
VREF 12	C5	
SYNC 12	B2	

4.4 Configuration of external axes

Once the drive unit, control signals, motors and resolvers have been installed, the external axes must be configured. See User's Guide, System parameters.

4.5 Adjusting synchronisation switches

1. Determine which is the positive direction for the axis. (Positive value on the teach pendant).

   A prerequisite is that the sync switch is closed when the axis is in the positive side of its working range.

2. Select the minus sign for gear ratio, if a positive analogue velocity frequency gives a negative direction of rotation on the axis side.

3. Jog the axis to its calibration position.

4. Adjust the position of the sync switch so that it is just about to switch over from the open to the closed position.

5. Calibrate the axis and save the parameters.

6. Restart the robot.

7. Synchronising the axis.

   If the axis moves out towards its end position, then the prerequisite described in item 1 above has not been fulfilled.

8. Check the fitting of the sync switch.

   Run the axis slowly, from the negative side of the working range and in a positive direction. When the sync switch switches over, read the angular value of the axis on the teach pendant.

   The max. acceptable angular error is ± 90° per gear ratio, expressed in degrees.

5 PLC Communication

This chapter describes how to control the robot using, for example, digital signals from a PLC.

All signals used in the following control sequences are system input and output signals. System signals may be defined at user-defined locations and there may be several signals that behave in the same way. See System Parameters in the User's Guide.

All system inputs are 0 to 1 level sensitive and the pulse length must exceed 50 ms.

Most system inputs are only permitted in the automatic mode. If any interactive unit, such as the teach pendant, a computer link, etc., has reserved exclusive rights to one or several functions in the system, the system input request will be denied.

A description of the signal sequences is provided below.

5.1 To verify that the robot is in automatic mode.

Signal sequence:

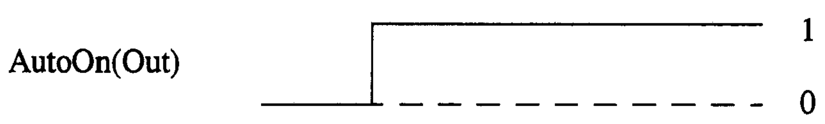

5.2 To switch the robot to MOTORS ON state

Requirement: Robot in MOTORS OFF state (RunchOK)

Signal sequence:

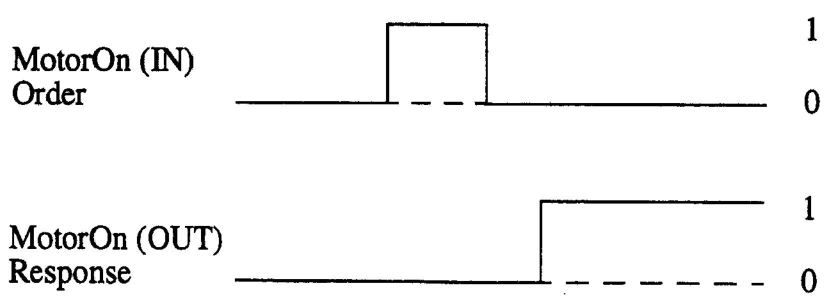

5.3 To switch the robot to MOTORS OFF state

Requirement: Robot in MOTORS ON state.

Signal sequence:

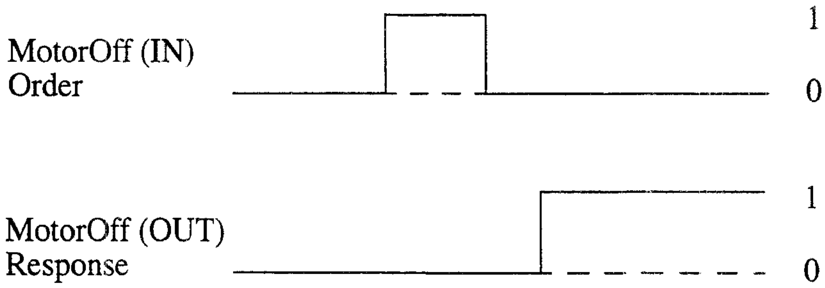

If the program is running (CycleON), the MotorOff action will stop execution of the program.

5.4 To start the program from the beginning of the main routine

Requirement: Robot in MOTORS ON state and program control not occupied by any other resource (e.g. teach pendant program window, external computers).

Signal sequence:

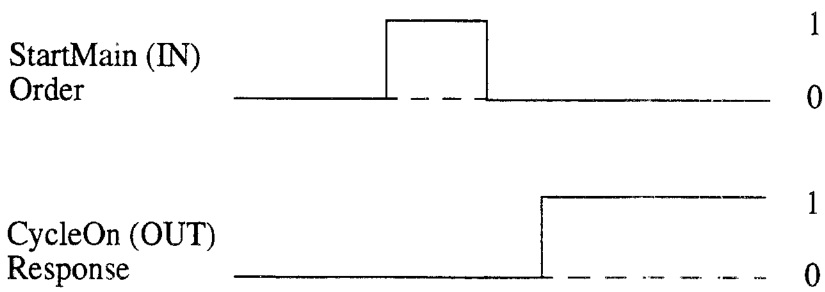

5.5 To start or restart program execution from current instruction

Requirement: Robot in MOTORS ON state and program control not occupied by any other resource (e.g. teach pendant program window, external computers).

Signal sequence:

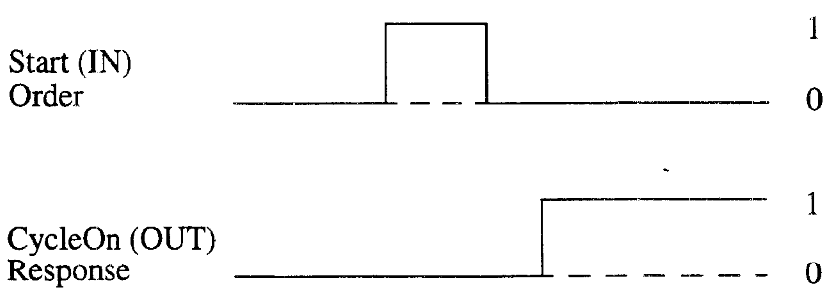

5.6 To load and start a program

Load a program from diskette or another mass storage device. The program will then start from the beginning. If a program is running, execution will stop first.

Requirement: Robot in MOTORS ON state and program control not occupied by any other resource (e.g. teach pendant program window, external computers).

Signal sequence:

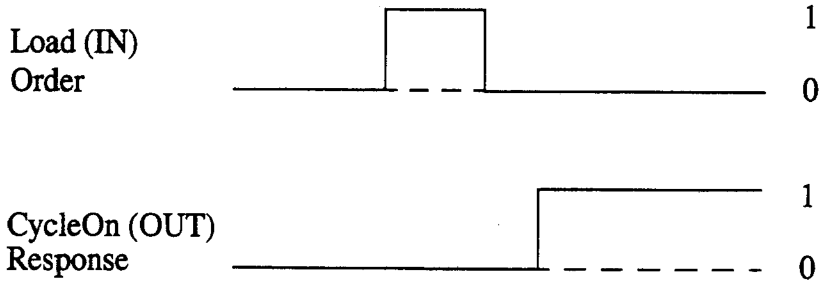

5.7 To stop program execution

Requirement: Valid in all modes.

Signal sequence:

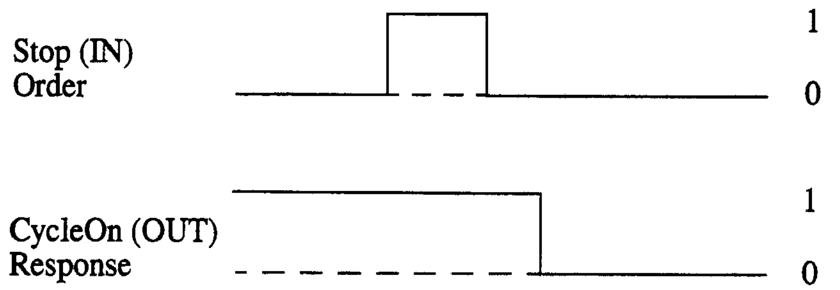

5.8 To stop at the end of the cycle

Stops program execution when the complete program cycle has been executed.

Requirement: Valid in all modes.

Signal sequence:

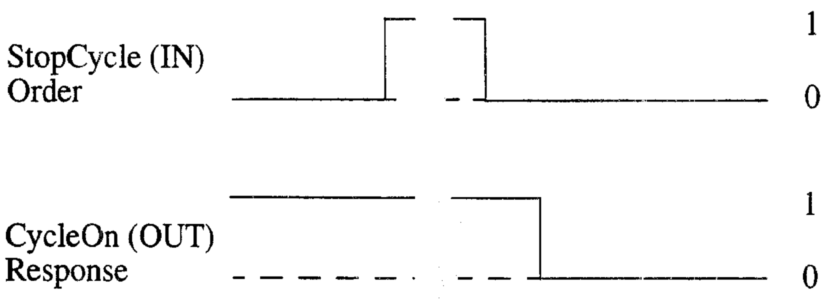

5.9 To detect spontaneous execution stops

Requirement: Robot in AutoOn (1), MotorON (1) and CycleOn (1).

Signal sequence:

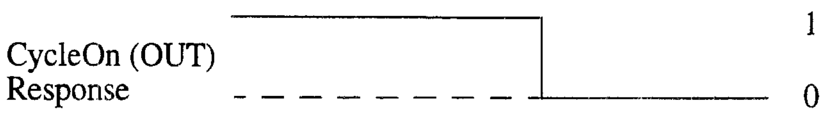

There are three main reasons for why stops occur:

1. Program controlled exit, stop (or error in the program).

2. Emergency stop.

3. Safety chain broken due to reasons other than an emergency stop.

Detect case 1 with:

MotorOn (1) and CycleOn (0)

Detect case 2 with:

MotorOn (0), CycleOn (0), EmStop (1) and RunchOK (0).

Detect case 3 with:

MotorOn (0), CycleOn (0), EmStop (0) and RunchOK (0).

5.10 To reset an emergency stop

Switches the robot back to MOTORS OFF state after a spontaneous emergency stop.

Requirement: Robot in automatic mode and emergency stop.

Signal sequence:

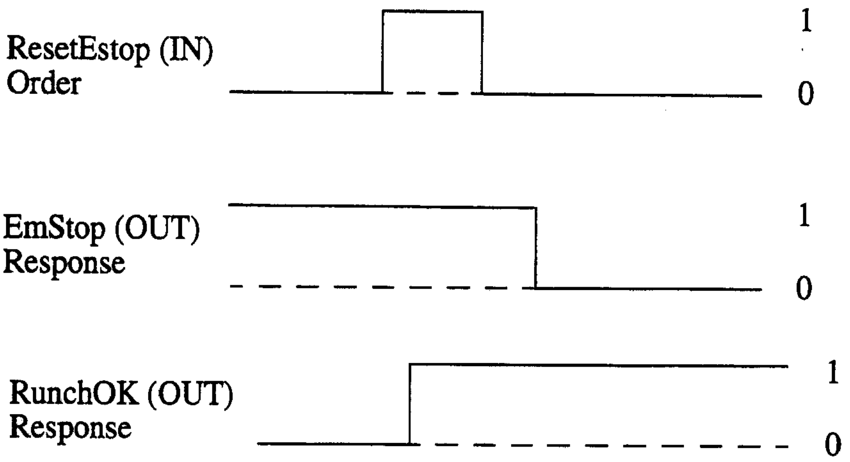

Continue by switching the power to the motors back on.

5.11 RunchOK

Switches the robot back to MOTOR OFF state after a spontaneous safety chain stop.

Requirement: Robot in automatic mode and spontaneous stop case 3 (see above).

Signal sequence:

Wait until the RunchOK is high (the safety chain is closed)

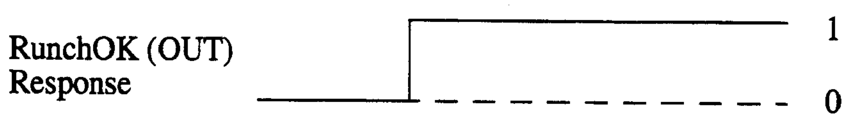

Continue by switching the power to the motors back on.

6 Installing the Control Program

The robot memory is battery-backed, which means that the control program and settings (pre-installed) are saved when the power supply to the robot is switched off. If, for some reason, these programs are lost, they must be reinstalled.

Never work with the original diskettes, make copies in a PC beforehand.

6.1 How to empty the memory

To install the control program in a system already in operation the memory must be emptied. That is done as follows:

- Select the Service window 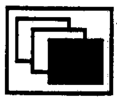
- Select **File: Restart**
- Then enter the numbers 1 3 4 6 7 9
- The fifth function key changes to **C-Start** (Cold start)
- Press the key **C-Start**

It can take quite some time to perform a Cold start. Just wait until the system starts the Installation dialog, see section 6.2.

6.2 Installation dialog

If there is no control program, a window like the one in Figure 45, with text in English, requesting you to insert the first installation diskette into the disk drive, will appear.

```
Welcome to the S4 controller

The system is empty and requires
installation of the controller software.

Please insert boot disk 1 and press
any key to start loading.
Loading....................
```

Figure 45 The window that informs you that there is no control program.

- First, insert the diskette into the disk drive.

- Press any key on the teach pendant and loading will start. A line of dots indicates that loading is in progress.
- If several diskettes are required, new prompts will ask you to insert these. Repeat the above steps.
- Answer any questions displayed on the teach pendant.

To update a system already in operation with ArcWare or SpotWare must the installation of the control program be done from the beginning. Empty the memory as in 6.1.

When all diskettes have been installed, the system will automatically restart – in the same way as a normal start-up.

Wait until the welcome window appears on the display before doing anything . It can take up to 2 minutes for it to appear after that the system says that the installation is ready.

6.3 Entering the system settings

The system contains only the basic settings.
There is no calibration data for the manipulator.

To enter the individual system settings (which include calibration data), any changes made to the basic settings that have been saved, and additional information (if any), do as follows:

1. Choose the **Misc.** 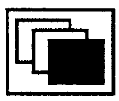 window.
2. Select the System Parameters. Press Enter.
3. Insert the diskette with the saved settings.
4. Choose **Load** from the **File** menu.
5. Select the floppy using the ***Unit*** key.
6. Select SYSPAR.
7. Confirm by pressing ***OK***.
8. Then press **File: Restart.**
9. Confirm by pressing ***OK***.

When everything has been read in, the robot automatically restarts – in the same way as a normal start-up. Conclude by updating the revolution counters, see User´s Guide, Service. The robot now has the same settings and calibration data as those stored on the Settings diskette. You must therefore store the current settings on diskette in order to be able to use them if you ever have to perform a new installation.

**After the control program has been installed, the diskettes should be stored in a safe place in accordance with the general rules for diskette storage.
Do not store the diskettes inside the controller due to the heat and magnetic fields there.**

CONTENTS

CONTENTS

Page

Maintenance

The robot is designed to be able to work under very demanding conditions with a minimum of maintenance. Nevertheless, certain routine checks and preventative maintenance must be carried out at specified periodic intervals, as shown in the table below.

- The exterior of the robot should be cleaned as required. Use a vacuum cleaner or wipe it with a cloth. Compressed air and harsh solvents that can damage the sealing joints, bearings, lacquer or cabling must not be used.
- The control system is completely encased which means that the electronics are protected in a normal working environment. In very dusty environments, nevertheless, the interior of the cabinet should be inspected at regular intervals. Use a vacuum cleaner if necessary. Change filter according to prescribed maintenance.
- Check that the sealing joints and cable bushings are really airtight so that dust and dirt are not sucked into the cabinet.

1 Maintenance Schedule

	Prescribed maintenance	Check Once a year	Maintenance intervals 4000 h or 2 years	12000 h or 3 years	5 years
MANIPULATOR	Large diameter bearing Greasing		X^1	X	
	Cabling	X^2			
	Mechanical stop axis 1	X^3			
	Gearbox 1, 6 Grease changing		X^4		
	Gearbox 1,2,3 and 6 Grease changing			X	
	Oil level in gear 4 and 5	X			
	Gearbox 4 and 5 Oil changing			X	X
	Accumulator for measuring system Check/exchange			3 years	
	Cooling motor, axis 1 Filter changing	X^5	X^5		
CONTROL SYSTEM	Cooling device Filter changing		X^6		
	Memory back-up Battery changing				X
	Transfomer cooling Filter changing/cleaning		X^6		

1. Recommended interval for large movements ($\geq \pm 45^o$) on axis 1. Typical for materials handling.
2. Inspect all visible cabling. Change if damaged.
3. Check the mechanical stop devices for deformation and damage. If the stop pin or the adjustable stop arm is bent, it must be replaced.
4. For press-tending (refers to grease changing and operating life for gearboxes 1 and 6) and heavy duty operation, axis 1 (option 5x is installed).
5. For manipulator with option 51 or 5x installed. Recommended interval for filter change is every 3 months.
6. Interval strongly dependent on the environment around the control system. An extra dust filter for the cooling device is supplied with the robot.

Mechanical Maintenance Schedule

IRB 6X00 M93-M97A and IRB 640 M97A delivered with balancing cylinders of new type, Art.Nr 3HAB 5970-1,3HAB 5971-1,3HAB6597-1.

1. Maintenance Schedule

	Prescribed maintenance			**Maintenance intervals**		
		Check twice a year	**Check once a year**	**4 000 h or 2 years**	**12 000 h or 3 years**	**5 years**
MANIPULATOR	Balancing unit axis 2 Bearings, inspection				X	
	Balancing unit axis 2 Bearings, greasing			X [1]	X	
	Balancing unit axis 2 Piston rod/Guiding ring		X [2]			
	Large diameter bearing Greasing			X [3]	X	
	Cabling		X [4]			
	Mechanical stop axis 1		X [5]			
	Gearboxes 1, 6 Grease changing			X [6]		
	Gearboxes 1, 2, 3 and 6 Grease changing				X	
	Oil level in gearboxes 4 and 5		X			
	Gearboxes 4 and 5 Oil changing				X	
	Accumulator for measuring system Exchange				3years [7]	
	Cooling motor, axis 1 Filter changing	X [8]		X		
CONTROL SYSTEM	Filter for drive-system cooling	X [8]		X		
	Memory back-up Battery changing					X [9]

1 For foundry operation.
2 If the robot operation is utilized in adverse conditions (for example: particle-laden environments, such as spot welding, grinding, deflashing, etc.), perform preventive maintenance more frequently to ensure proper reliability of the robot system. See section 2.6.
3 For foundry operation and recommended interval for large movements ±45 ° on axis 1.
4 Inspect all visible cabling. Change if damaged. See section 1.2.
5 Check the mechanical stop devices for deformation and damage. If the stop pin or the adjustable stop arm is bent, it must be replaced. See section 2.11.
6 For press-tending (refers to grease changing and operating life for gearboxes 1 and 6) and heavy duty operation, axis 1 (option 5x is installed).
7 See section 2.12.
8 Change interval is strongly dependent on the environment around the robot. See section 2.13 and 2.14.
9 See section 2.16.

1.1 Maintenance intervals for gear axis 1 and 6 for press-tending applications and heavy duty operation on axis 1.

-Option 51 PT adaptation for IRB6400/2.8-120

-Heavy duty axis 1 (option 5x is installed)

Axis 1

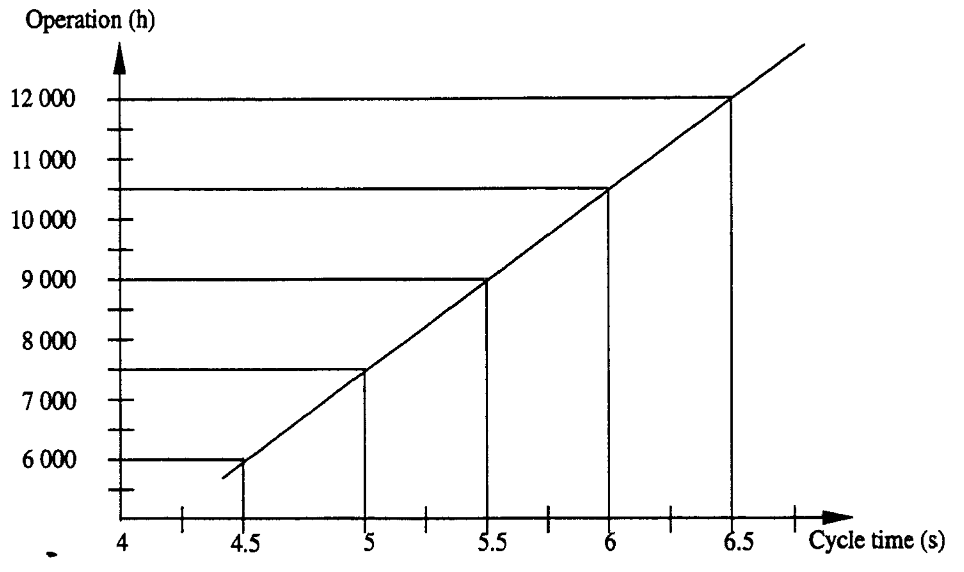

Figure 1 Recommended interval for grease exchange axis 1.

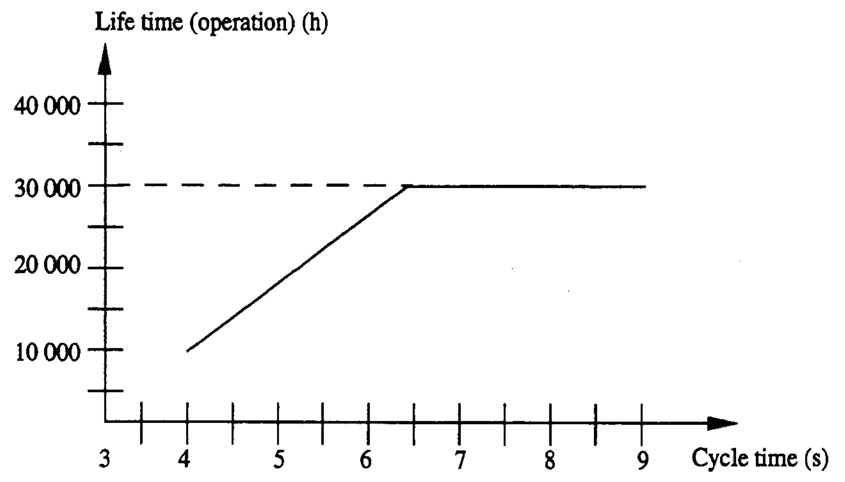

Figure 2 Approx. estimate of operating life of gearbox axis 1 as a function of the cycle time.

Axis 6

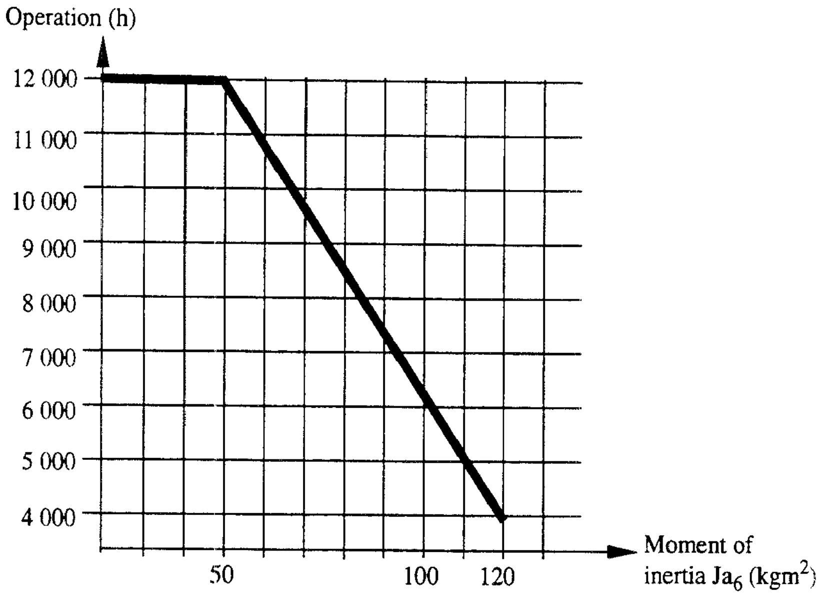

Figure 3 Recommended interval for grease exchange axis 6

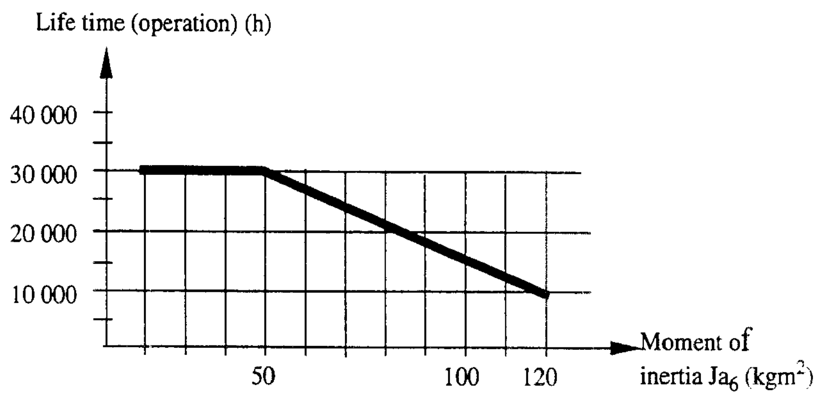

Figure 4 Approx. estimate of operating life of gearbox axis 6 as a function of the moment of inertia Ja_6. Ja_6 according to the Product Specification, chapter 3.

2 Instructions for Maintenance

2.1 General instructions for the manipulator.

Check regularly:

- for any oil leaks. If a major oil leak is discovered, call for service personnel.
- for excessive play in gears. If play develops, call for service personnel.
- that the cabling between the control cabinet and robot is not damaged.

Cleaning:

- Clean the robot exterior with a cloth when necessary. Do not use aggressive solvents which may damage paint or cabling.

2.2 Checking the oil and grease levels.

Axes 1, 2, 3 and 6.

The level in the gearboxes is checked by adding new grease, until grease comes out through the special draining holes. See section “Lubricating gear boxes axis 1, axis 2 and axis 3”.

Axes 4 and 5.

The level is checked by opening the oil plugs. See section “Lubricating gear box axis 4, respectively axis 5”.

2.3 Lubricating the large diameter bearing, axis 1.

• Remove the two plugs.

• Fit the grease nipples (R1/8" art. No. 2545 2021-26).

• Grease through (1) the two nipples. Turn the axis 1 ±90° while greasing is in progress.

• Continue greasing until new grease exudes from the rubber seal (2).

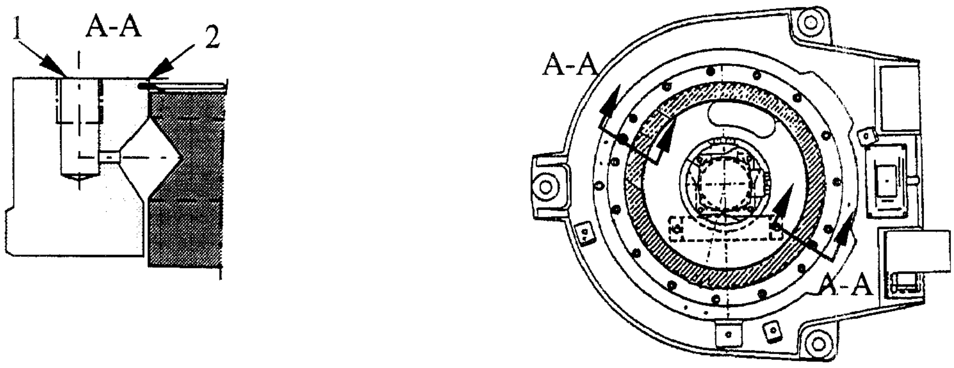

Figure 5 Lubricating the large diameter bearing.

• Remove excess grease with a cloth.

Type of grease:

- ABB art. no. 1171 4013-301, quality 7 1401-301
- ESSO Beacon EP 2
- Shell Alvanina EP Grease
- SKF Grease LGEP 2
- BP Energrease LS-EP 2

Tools:

- See Tool List.

2.4 Lubricating gear box, axis 1

- Remove the cover on the base (4). (See Figure 6)
- Remove the plug (3).
- Fit an R1/2" grease nipple and drain tube.
- Grease through the nipple (1).
- Continue greasing until new grease exudes from the drain tube. See Volume below.
- Axis 1 should be slowly moved backwards and forwards while greasing.
- Suck out any excess grease before replacing the plug.

Volume:

- 1.3 litres (0.36 US gallon).
- About 3.0 litres (0.82 US gallon) should be used when changing the grease.

Type of grease:

- ABB 3HAA 1001-294
- Optimol Longtime PD 0

Tools:

- See Tool list.

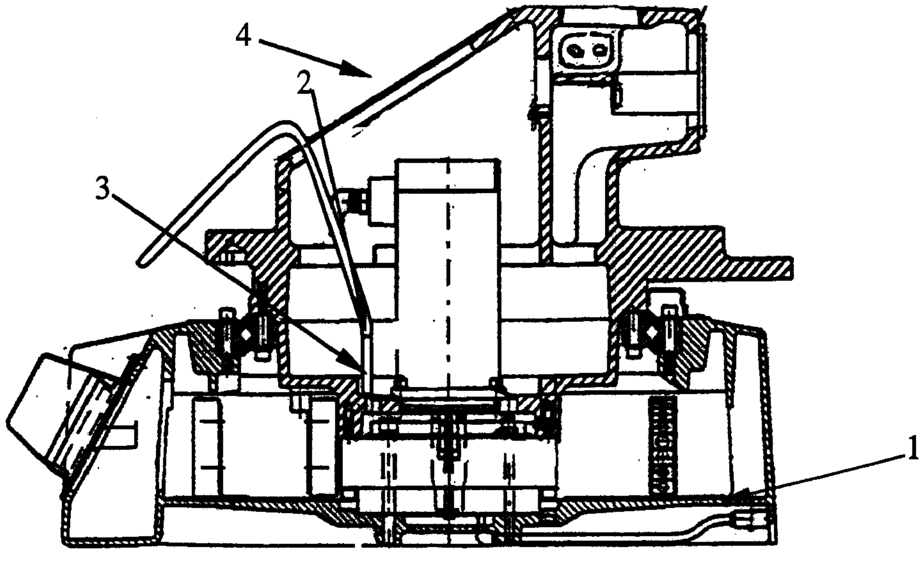

Figure 6 Lubricating axis 1.

2.5 Lubricating gearboxes, axes 2 and 3.

- Remove the filler (1) and drain (2) plugs. See Figure 7.
- Grease through the filling hole (1).
- The axes 2 and 3 shall be moved slowly backwards and forwards several times while greasing.
- Continue greasing until new grease exudes from the drain hole (2). See Volume below.
- Move the axes backwards and forwards a couple of times before the plugs are replaced, so that excess grease is pressed out. This is to prevent over-pressure in the gearbox, with risks for leakage.

Volume:

- 1.3 litres (0.36 US gallon).
- About 2.0 litres (0.82 US gallon) should be used when changing the grease.

Type of grease:

- ABB 3HAA 1001-294
- Optimol Longtime PD 0

Tools:

See Tool list.

WARNING! It is important that the drain plug is removed during lubrication.

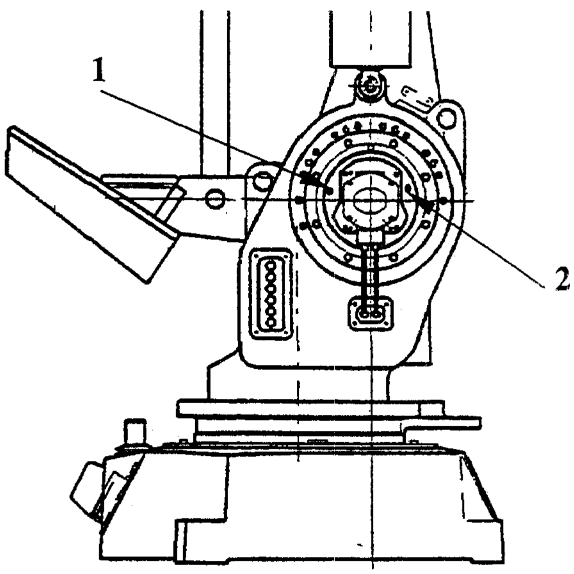

Figure 7 Drain holes, axes 2 and 3.

2.6 Oil change gearbox, axis 4

- Move the upper arm to the horizontal position.
- Remove the plugs (A) and (B).
- Drain off the old oil through the hole (A). See Figure 8.
- Clean the magnetic drain plug before refitting.
- Refit the drain plug (A).
- Fill up with new oil until the oil level reaches the lower edge of the filling hole (B).

S/2.9 - 120

- Move the upper arm to the max. upper position before draining the oil.
- Move the upper arm to the vertical position before filling oil.
- Fill up with new oil until the level is 30 - 35 mm below the upper side of the cover.

Volume approx.:

- 6 litres (1.75 US gallon).

Correct oil level for axis 4 is to the lower edge of the upper oil-level plug (B).

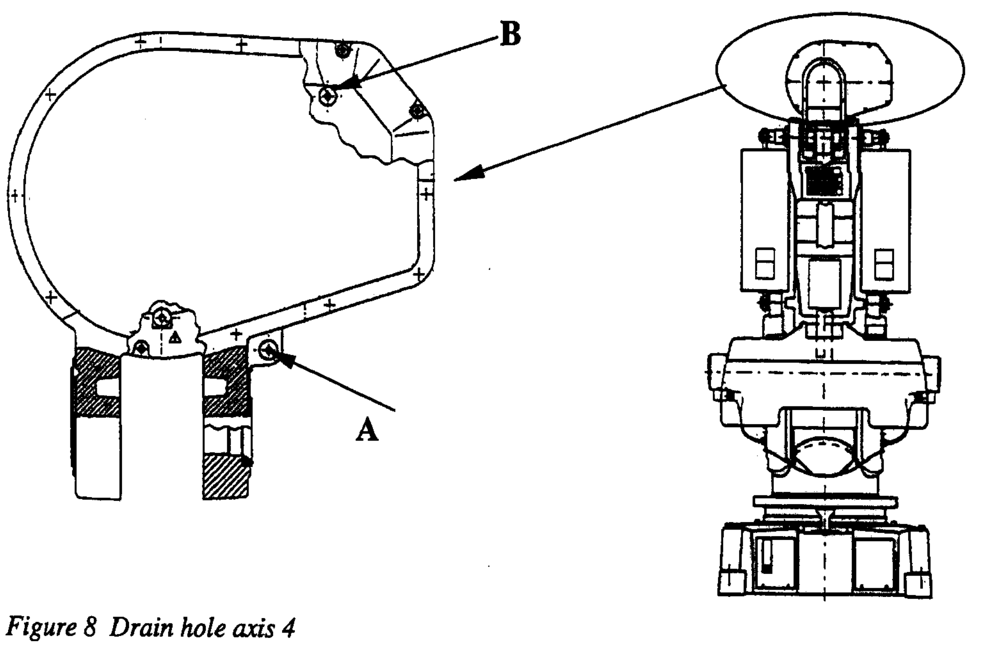

Figure 8 Drain hole axis 4

Type of oil:

- ABB 1171 2016-604

Equivalents:

- BP	Energol GR-XP 320
- Castrol	Alpha SP 320
- Esso	Spartan EP 320
- Klüber	Lamora 320
- Mobil	Mobilgear 632
- Optimol	Optigear 5180
- Shell	Omala Oil 320
- Texaco	Meropa 320
- Statoil	Loadway EP

2.7 Oil change gearbox, axis 5

- Move the upper arm to the horizontal position with axis 4 turned +90°
- Open the oil plug 1, and then oil plug 2 so that air can enter.
- Rotate axis 4 manually backwards and forwards to drain the oil, after first releasing the brake on axis 4.
- Clean the magnetic drain before refitting.
- Turn axis 4 through -90° before filling oil. Fill the oil through hole 2, until the oil is level with the lower edge of the filler hole.

S/2.9-120

- Move the upper arm to the max. upper position before draining the oil.
- Move the upper arm to the vertical position before filling oil.
- Fill up with new oil until the oil is level with the edge of hole 2.
-

Volume approx:

- 5 litres (1.38 US gallon).

Correct oil level for axis 5 is to the lower edge of the oil level plug.

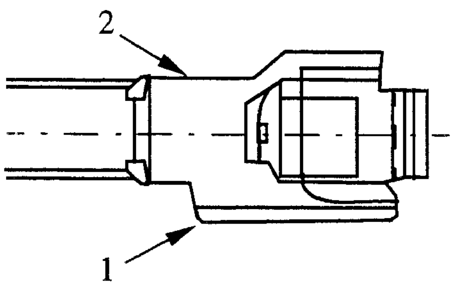

Figure 9 Oil change axis 5.

Type of oil:

- ABB 1171 2016-604

Equivalents:

- BP	Energol GR-XP 320
- Castrol	Alpha SP 320
- Esso	Spartan EP 320
- Klüber	Lamora 320
- Mobil	Mobilgear 632
- Optimol	Optigear 5180
- Shell	Omala Oil 320
- Texaco	Meropa 320
- Statoil	Loadway EP

2.8 Lubricating gear box, axis 6.

• Remove the plug from the drain hole (1). See Figure 10

Note! Version with only middle hole, remove all the tools that are fitted on the turning gear.

WARNING! It is important that the drain plug is removed.

• Grease through the nipple (2) in the middle of the turning gear or radiell nipple of turning gear (3).

• Rotate axis 6 while greasing.

• Continue to grease until new grease exudes from the drain hole (1). See Volume below.

Move axis 6 backwards and forwards a couple of times before the plugs are replaced, so that excess grease is pressed out. This is to prevent over-pressure in the gearbox, with risks for leakage.

Volume:

- 0.25 litres (0.07 US gallon).
- About 0.4 litres (0.11 US gallon) should be used when changing the grease.

Type of grease:

- ABB 3HAA 1001-294
- Optimol Longtime PD 0

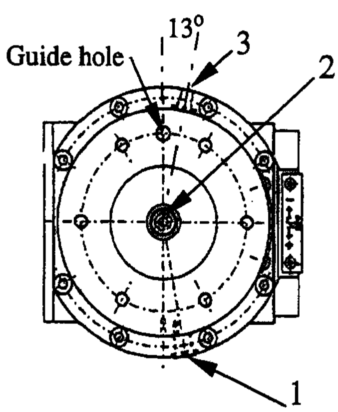

Figure 10 Greasing axis 6.

2.9 Checking mechanical stop, axis 1

Check regularly, as follows:

Fixed stop arm:

- that the arm is not bent

Stop pin:

- that the rubber cover is not damaged.
- that the stop pin can move in both directions.
- that the stop pin is not bent.

Adjustable stop arms:

- that the arms are not bent.

WARNING!

1. It is not allowed to straighten the fixed stop arm if it´s bent.
2. If the pin is bent, a collision between the swinging stop arm and the stop pin has probably occurred. A bent stop pin shall always be replaced by a new one.
3. If any of the adjustable stop arms is bent, it shall be replaced by a new one.

	Article number
Stop pin	3HAB 4082-1
Adjustable stop arm	3HAB 4533-3 (Option)

2.10 Changing the battery in the measuring system

The battery to be replaced is located under the cover, in the front of the frame. (See Figure 11.)

The article number of the battery is 4944 026-4.

Type: Rechargeable Nickel-Cadmium battery.

The battery must never be thrown away, it must always be handled as hazardous waste.

- Set the robot to the MOTORS OFF operating mode. (This means that it will not have to be coarse-calibrated after the change.)
- Loosen the battery terminals from the serial measuring board and cut the clasps that keep the battery unit in place.
- Install a new battery with two clasps and connect the terminals to the serial measuring board.

Note! It takes 18 hours to recharge a new battery. The mains supply must be switched on during this time.

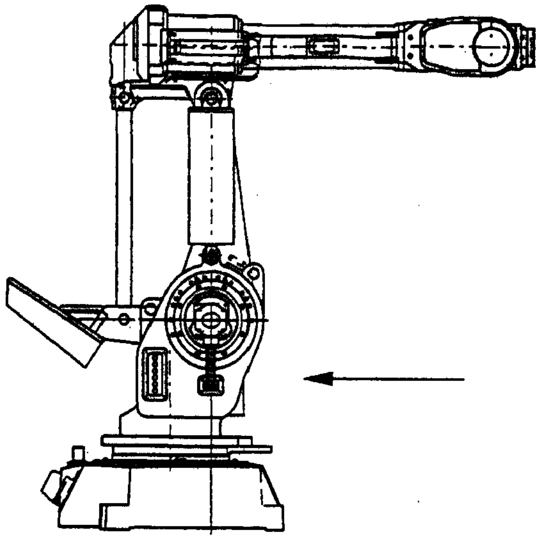

Figure 11 The battery is located in the front of the frame 2.

2.11 Changing filter/cooling of motor axis 1.

- Loosen the filter holder at the intake. Insert the new filter and replace the filter holder.

The article number of the filter is 3HAA 1001-612

2.12 Changing the cooling device filter

- Remove the grating on the left side of the refrigerating machine.
- Remove the old filter and insert a new one.
- Replace the grating.

The article number of the filter is 7820 004-3

2.13 Changing the transfomer cooling filter

- Open the cabinet door.
- Remove the old filter and insert a new one or wash it.

The article number of the filter is 3HAB 2780-1

2.14 Changing the battery for memory back-up

Type: Lithium Battery.

The article number of the battery is 4944 026-5

The batteries (two) are located on the rack near the main computer board (see Figure 12).

Warning:

- Do not charge the batteries. An explosion could result or the cells could overheat burns.
- Do not open, puncture, crush, or otherwise mutilate the batteries. A possibility of an explosion exists and/or toxic, corrosive, and inflammable liquids would be exposed.
- Do not incinerate or expose the batteries to high temperatures. Do not attempt to solder batteries. An explosion could result.
- Do not short positive and negative terminals together. Excessive heat can build up and cause severe burns.

Warning:

Do not incinerate or dispose of lithium batteries in general trash collection. Explosive violent rupture is possible. Batteries should be collected for disposal in a manner to prevent against short circuitting, compacting, or destruction of case integrity and hermetic seal.

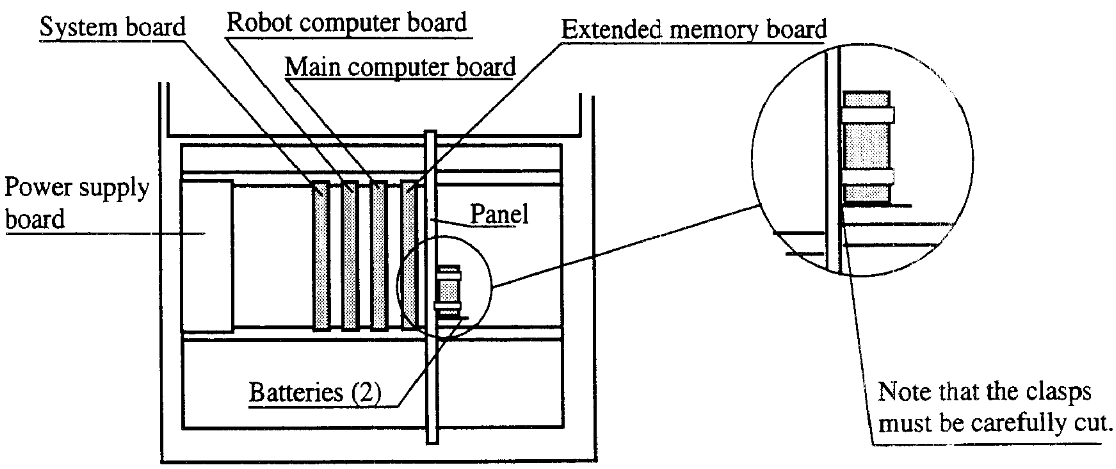

Figure 12 The location of the batteries on the rack.

- Note from the teach pendant which of the two batteries has expired and needs replacement. If both batteries must be replaced, make sure that all memory contents are stored on diskettes (parameters, programs, RAMdisk).
- Turn off the power supply.
- Loosen the expired battery terminals from the backplane.

- Remove the battery by cutting the clasps.
- Insert the new battery and fasten using new clasps.
- Connect the battery terminals to the backplane.
- Turn on the power supply.
- If both batteries are replaced, a complete new installation of Robot Ware is necessary, see Installation and Commissioning.

CONTENTS

CONTENTS

Page

Troubleshooting Tools

Generally speaking, troubleshooting should be carried out as follows:

- Read any error messages shown on the teach pendant display.
  What these messages mean is described in *Error Messages*.
- Check the LEDs on the front of the boards. See *Indication of Faults in the Various Units* page 9.
- Try to restart the system. When the robot is started up, a self-diagnostic is run which detects any errors. The tests performed during the self-diagnostic are described in the chapter *Diagnostics* page 3.
- Check the cables, etc., using the circuit diagrams.

1 Diagnostics

The control system is supplied with diagnostic software to facilitate troubleshooting and to reduce downtime. Any errors detected by the diagnostics are displayed in plain language with an error code number on the display of the teach pendant.

All error messages are logged in an error log which contains the last 50 error messages saved. This enables an "error audit trail" to be made which can be analysed. The error log can be accessed from the Service menu using the teach pendant. For more detailed information on error messages see Chapter 11 of this manual.

The diagnostic programs are stored in the PROM on the robot computer board. The diagnostic programs that are stored in the PROM are executed by the I/O computer.

The control system runs through various tests depending on the start-up mode of the system:

Cold Start (when the system has been switched off without battery back-up and the memory is empty). Cold starts occur normally only when the system is started the first time, when a computer board has been replaced due to a fault, or when the PROM on the I/O computer has been replaced.

First, the test programs in the PROM, Built In Self Test (BIST), are executed by the robot computer (I/O computer) and the main computer. These tests and the test results are displayed on the display of the teach pendant. If the tests do not indicate any errors, a message will appear on the display, requesting you to insert a boot diskette into the disk drive. If, however, the diagnostics detect an error, the red LED on the faulty board will light up and, normally, an error message will appear on the display.

Warm Start is the normal type of start-up when the system is run in production (the memory is battery-backed). During a warm start, only a subset of the test program is executed. These tests and the test results are displayed on the display of the teach pendant.

INIT is carried out via a push-button located on the backplane. **INIT** is about the same as switching the power on. Which tests are run depends on whether or not the system is booted.

The Service Level can be accessed during normal operation and can be used to read or delete the error log.

Monitor Mode 2 is a test condition in which a large number of tests can be run. A detailed description will be found in Chapter 1.2.

Under **normal operating conditions**, a number of test programs are run in the background. The operating system ensures that the tests can be run whenever there is a time slot.

The background tests are not seen in normal circumstances, but will give an indication when an error occurs.

Flow Chart of Diagnostic Software

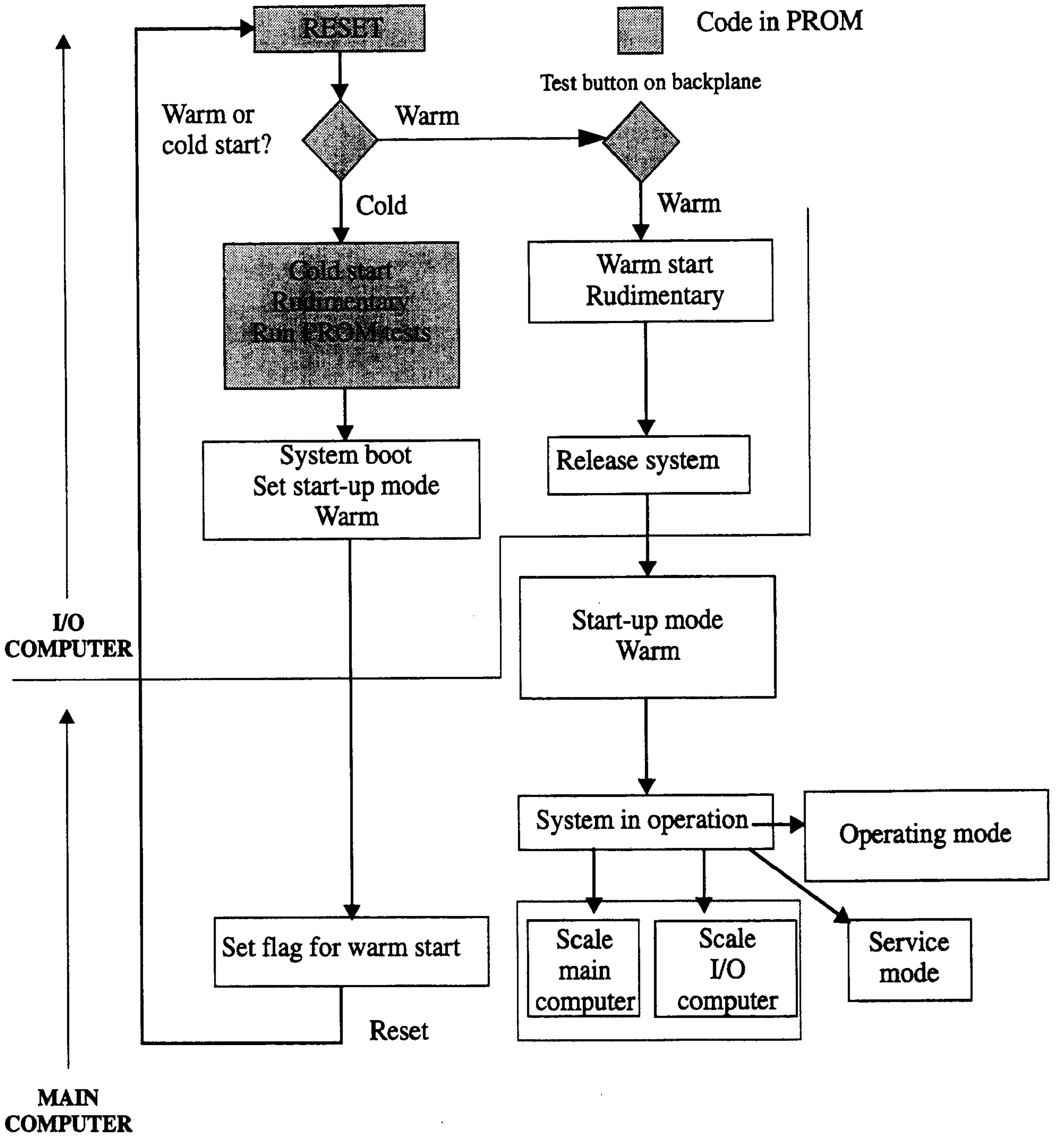

1.1 Tests

There are two main types of test programs: internal system tests and tests of the type RAPID. The latter are on the configuration diskette and must be loaded separately.

Most of the internal system tests are only run when the system is cold-started. All the tests can be run in Monitor Mode 2, as described in Chapter 1.2. Non-destructive memory tests, checksum tests, etc., are only run when the system is warm-started.

All the tests are listed below in test number order.

T1002: IOC Prom Checksum-test

T1004: IOC Memory-test(RWM) Destructive

T1012: IOC Internal SIO1-test

T1013: IOC Internal SIO4-test

T1014: IOC Internal SIO7-test

T1018: IOC Battery-test

T1027: IOC Duart1 Timer/Counter-test

T1028: IOC Duart2 Timer/Counter-test

T1029: IOC Duart1-A SIO2-test

T1030: IOC Duart1-B SIO5-test

T1031: IOC Duart2-A SIO3-test

T1032: IOC Duart2-B SIO8-test

T1037: Floppy Read Test

T1038: Floppy Write Test

T1039: Floppy Format Test

T1040: Floppy Copy Test

T1046: IOC IOC->MC Read-/Write-test

T1047: IOC IOC->MC Memory-test Destructive

T1049: IOC IOC->MC DMA-test

T1053: IOC IOC->AXC Read-/Write-test

T1058: IOC VME-BusError-test

T1060: IOC System Reset

T1061: IOC IOC->AXC Load AXC

T1062: IOC IOC->AXC VME-AM-test

T1063: IOC IOC->AXC System Fail-test

T1066: IOC IOC->AXC DMA-test

T1067: IOC IOC->AXC Memory test(RWM)Destr.

T1501: IOC Read Prom Checksum

T1503: IOC Diode on

T1504: IOC Diode off

T1505: IOC IOC->MC Diode on

T1506: IOC IOC->MC Diode off

T1507: IOC IOC->ERWM Diode on

T1508: IOC IOC->ERWM Diode off

T1509: IOC IOC->MC Release MC

T1510: IOC IOC->MC Reset MC

T1511: IOC IOC->MC Set Cold-start-mode

T1512: IOC IOC->MC Load MC

T1513: IOC IOC->MC Clock Frequence

T1514: IOC IO-Bus-test

T1515: IOC IOC->MC Reset Password

T2002: MC Memory-test(RWM) Destructive

T2010: MC Memory-test(RWM) BM Destructive

T2027: MC MC->AXC CPU-Read-/Write-test

T2501: MC Diode off

T2502: MC Diode on

T3013: AXC Measurement loop-back-test

T3014: AXC SerialMeasure-JUMPER-test

T4003: IOC-MC IOC->MC Mailbox1-test

T4004: IOC-MC IOC->MC Mailbox2-test

T6001: IOC DSQC 315 JUMPER-test, pos 1

T6002: IOC DSQC 315 JUMPER-test, pos 2

T6003: IOC DSQC 315 JUMPER-test, pos 3

T6004: IOC DSQC 315 JUMPER-test, pos 4

T6005: IOC DSQC 315 JUMPER-test, pos 5

T6006: IOC DSQC 315 JUMPER-test, pos 6

1.2 Monitor Mode 2

When the system is in Monitor Mode 2, a large number of tests can be run. These tests are only available to service personnel with access to the correct password. It should be noted that some of the tests will cause activity on customer connections and drive systems, which can result in damage , accidents etc. if suitable precautionary measues are not taken. It is advisable to disconnect all the connections involved, during these tests.

The following equipment is required to run the tests:

A terminal or a PC with terminal emulation, and a 25 -> 9 dsub adapter with a jumper across pins 5 and 7 on the adapter. The terminal/PC shall be set up for 9600 baud, 8 bits, no parity, and shall be connected to the X51 terminal connector on the backplane.

Start up:

With the adapter and the terminal connected, turn on the mains power or make a reset. To enter Monitor Mode 2, press the Enter key within 5 (five) seconds.

The system will request a password: 4433221.

When the correct password has been entered, a menu will be displayed on the screen, as shown below:

Welcome to Monitor Mode-2

1. Memory IO	(Tests the memory)
2. Serial IO	(Tests the serial channels)
3. Elementary IO	(Tests the IO-board)
4. DSQC 3xx (IOC)	(Tests the IO-computer)
5. DSQC 3xx (AXC)	(Tests the axes computer)
6. DSQC 3xx (MC, ERWM)	(Tests the main computer and external memory boards)
7. System tests (MISC)	(System-related tests)
8. Auxiliary	(Special tests)
9. Specifik test	(Specific tests that can be run separately)
10. T1060 IOC System reset	

Select test group and the test group menu will be displayed.

<u>Memory IO</u>

1. FLOPPY
    1. T1038 IOC Floppy Write Test
    2. T1037 IOC Floppy Read Test
    3. T1040 IOC Floppy Copy Test
    4. T1039 IOC Floppy Format Test
2. RWM
    1. T1004 IOC Memory-test Destructive
    2. T1047 IOC IOC->MC Memory-test Destructive
    3. T2002 MC Memory-test Destructive

4. T2010 MC Memory-test BM Destructive
5. T1067 IOC IOC->AXC Memory-test Destructive

3. PROM

1. T1002 IOC Prom Checksum-test
2. T1501 IOC Read Prom Checksum

<u>Serial IO</u>

1. SIO1
   1. T1012 IOC Internal SIO1-test
2. SIO2
   1. T1029 IOC Duart1-A SIO2-test
3. SIO3
   1. T1031 IOC Duart2-A SIO3-test
4. SIO4
   1. T1013 IOC Internal SIO4-test
5. SIO5
   1. T1030 IOC Duart1-B SIO5-test
6. SIO7
   1. T1014 IOC Internal SIO7-test
7. SIO8
   1. T1032 IOC Duart2-B SIO8-test

<u>Elementary IO</u>

1. T1514 IOC IO-Bus-test
2. T6001 IOC DSQC 315-JUMPER-test, pos 1
3. T6002 IOC DSQC 315-JUMPER-test, pos 2
4. T6003 IOC DSQC 315-JUMPER-test, pos 3
5. T6004 IOC DSQC 315-JUMPER-test, pos 4
6. T6005 IOC DSQC 315-JUMPER-test, pos 5
7. T6006 IOC DSQC 315-JUMPER-test, pos 6

<u>DSQC 3xx IOC</u>

1. IOC-CPU
   1. T1012 IOC Internal SIO1-test
   2. T1013 IOC Internal SIO4_test
   3. T1014 IOC Internal SIO7-test
2. PROM
   1. T1002 IOC Prom Checksum-test
   2. T1501 IOC Read Prom Checksum
3. RWM
   1. T1004 IOC Memory-test Destructive
4. RTC
   1. Not yet introduced.
5. I/O-BUS
   1. Not yet introduced.
6. FDC
   1. T1037 IOC Floppy Read Test
   2. T1038 IOC Floppy Write Test
   3. T1039 IOC Floppy Format Test
   4. T1040 IOC Floppy Copy Test

7. UART (Serial IO)
   1. T1027 IOC Duart1 Timer/Counter-test
   2. T1028 IOC Duart2 Timer/Counter-test
   3. T1029 IOC Duart1-A SIO2-test
   4. T1030 IOC Duart1-B SIO5-test
   5. T1031 IOC Duart2-A SIO3-test
   6. T1032 IOC Duart2-B SIO8-test
8. DMA
   1. T1049 IOC IOC->MC DMA-test
   2. T1066 IOC IOC->AXC DMA-test
9. VME
   1. T1058 IOC VME-BusError-test
10. Miscellanous
    1. T1018 IOC Battery-test
    2. T1060 IOC System Reset
11. Diode
    1. T1503 IOC Diode on
    2. T1504 IOC Diode off

<u>DSQC 3xx (AXC)</u>

1. T1053 IOC IOC->AXC Read-/WRITE-test
2. T1061 IOC IOC->AXC Load AXC
3. T1062 IOC IOC->AXC VME AM test
4. T1063 IOC IOC->AXC System fail test
5. T1067 IOC IOC->AXC Memory test(RWM)Destr.
6. T2027 MC MC->AXC CPU Read/Write test
7. T3013 AXC Measurement channel loop-test

<u>DSQC 3xx (MC, ERWM)</u>

1. MC-CPU
   1. T1513 IOC IOC->MC Clock Frequency
2. RWM
   1. T1046 IOC IOC->MC Read-/Write-test
   2. T1047 IOC IOC->MC Memory-test Destructive
   3. T1049 IOC IOC->MC DMA-test
   4. T2002 MC Memory-test Destructive
   5. T2010 MC Memory-test BM Destructive
3. DIODE
   1. T1505 IOC IOC->MC Diode on
   2. T1506 IOC IOC->MC Diode off
   3. T1507 IOC IOC->ERWM Diode on
   4. T1508 IOC IOC->ERWM Diode off
   5. T2502 MC Diode on
   6. T2501 MC Diode off
4. DUART
   1. Not yet introduced.
5. VME
   1. Not yet introduced.
6. DMA
   1. Not yet introduced.

7. Miscellanous

1. T1512 IOC IOC->MC Load MC
2. T1509 IOC IOC->MC Release MC
3. T1510 IOC IOC->MC Reset MC
4. T1513 IOC IOC->MC Clock Frequency
5. T1511 IOC IOC->MC Set Cold-start-mode
6. T4003 IOC-MC IOC->MC Mailbox1-test
7. T4004 IOC-MC IOC->MC Mailbox2-test

System tests (Misc)

1. Battery

1. T1018 IOC Battery-test

2. IOC-MC

1. T1512 IOC IOC->MC Load MC
2. T1509 IOC IOC->MC Release MC
3. T1046 IOC IOC->MC Read-/Write-test
4. T1047 IOC IOC->MC Memory-test Destructive
5. T1049 IOC IOC->MC DMA-test
6. T1505 IOC IOC->MC Diode on
7. T1506 IOC IOC->MC Diode off
8. T1507 IOC IOC->ERWM Diode on
9. T1508 IOC IOC->ERWM Diode off
10. T1510 IOC IOC->MC Reset MC
11. T1513 IOC IOC->MC Clock Frequency

3. IOC-AXC

1. T1061 IOC IOC->AXC Load AXC
2. T1053 IOC IOC->AXC Read-/Write-test
3. T1062 IOC IOC->AXC VME-AM-test
4. T1063 IOC IOC->AXC System Fail-test
5. T1066 IOC IOC->AXC DMA-test
6. T1067 IOC IOC->AXC Memory test Destructive

4. MC-AXC

1. T2027 MC MC->AXC CPU-Read-/Write-test

5. AXC-IOC

1. Not yet introduced.

6. VME

1. T1058 IOC VME-BusError-test

7. RTC

1. Not yet introduced.

8. IO-Bus

1. T1514 IOC IO-Bus-test

9. Reset password

1. T1515 IOC IOC->MC Reset Password

10. Cold start

1. T1511 IOC IOC->MC Set Cold-start-mode

Auxiliary

1. Drive system

1. Not yet introduced.

2. Measure system

1. T3013 AXC Measurement channel loop-test

3. Teach pendant

1. Not yet introduced.

<u>Specific test Txxxx</u>

Enter testnumber Txxxx : T

All available tests have been defined in Chapter 1.1.

2 Indication of Faults in the Various Units

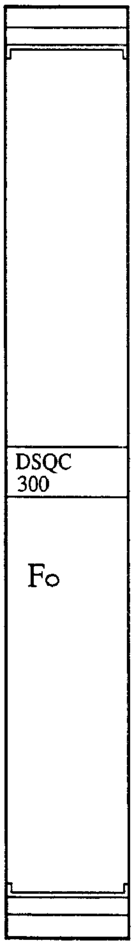

2.1 Robot computer DSQC 326/DSQC 335

Designation	Colour	Description
F	Red	Turns off when the board approves the initialisation.

7

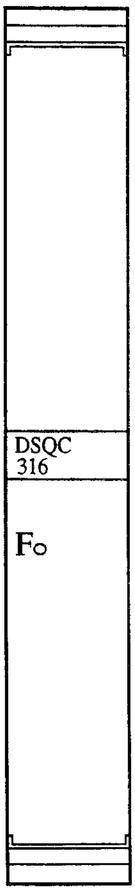

2.2 Main computer DSQC 316/DSQC 325

Designation	Colour	Description
F	Red	Turns off when the board approves the initialisation.

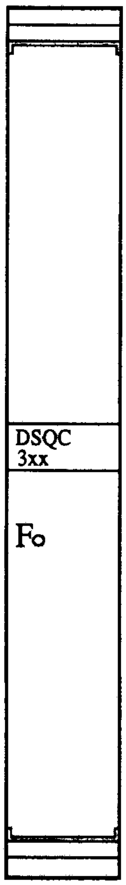

2.3 Memory board DSQC 324/16Mb, 323/8Mb, 317/6 Mb, 321/4 Mb

Designation	Colour	Description
F	Red	Turns off when the board approves the initialisation.

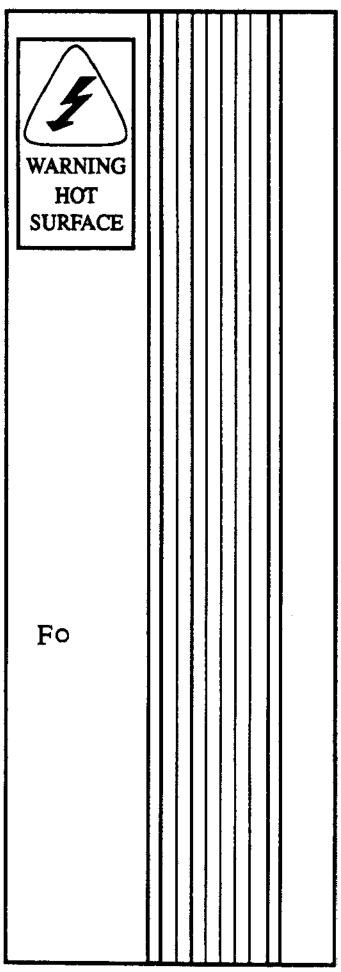

2.4 Power supply unit DSQC 258

Designation	Colour	Description
F	Red	Unlit: All supplies are within the appropriate limits (or there is no main supply). Flashing: Short-circuited +24V. Lit: +5V, +15V or −15V short-circuited.

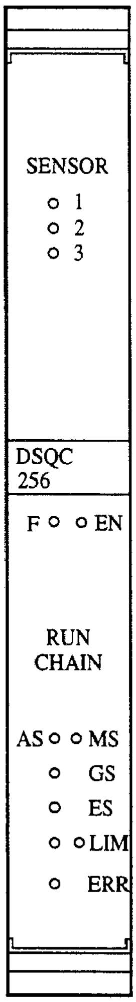

2.5 System board DSQC 256A

Sensors 1-3	Yellow	Lights when high signals are received from sensors 1-3. The LED shines more brightly the more voltage is input. This means that even if the input voltage is just under the voltage level "1", the LED will glow dimly.
F	Red	Turns off when the board approves the initialisation.
EN	Green	Lit if the safety chain is not broken.
AS	Yellow	Lights when the circuits up to and including the automatic mode safeguard stop (AS) are closed.
MS	Yellow	Lights when the enabling device on the teach pendant is pressed halfway if the circuits up to and including the manual mode safeguard stop (MS) are closed.
GS	Yellow	Lights when the circuits up to and including the general mode safeguard stop (GS) are closed.
ES	Yellow	Lights when the circuits up to and including the emergency stop (ES) are closed.
LIM	Yellow	Lights when all circuits and limit positions are closed. The left LED indicates the status of safety chain 1 and the right of safety chain 2.
ERR	Red	Only lit if a safety chain is broken.

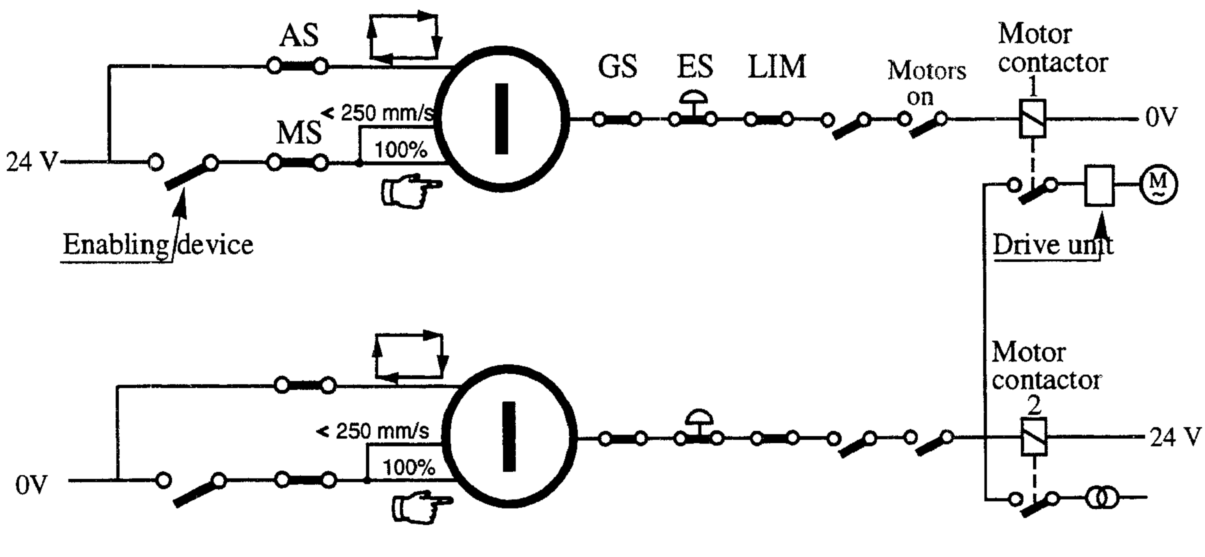

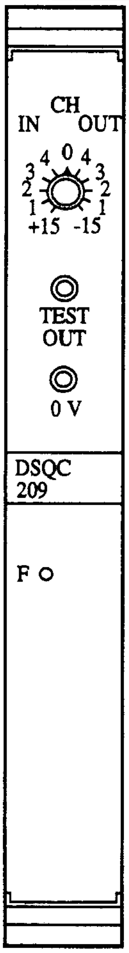

2.6 Analog I/O board DSQC 209

Designation	Colour/Type	Description
Test switch	+15:	+ supply
	IN 1-4:	input signal
	0:	0V
	OUT 1-4:	output signal
	- 15:	- supply
Test out	Measuring terminal	The analog value of the signal indicated by the test switch.
0V	Measuring terminal	0V
F	Red	Turns off when the board approves the initialisation.

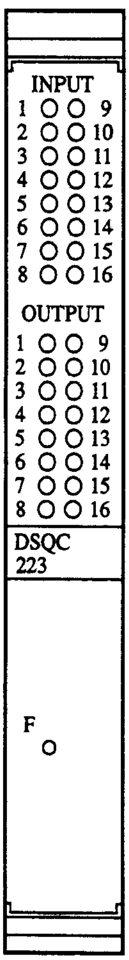

2.7 Digital I/O board DSQC 223

Designation	Colour	Description
INPUT	Yellow	Lights when it receives a high signal from an input. The LED shines more brightly the more voltage is input. This means that even if the input voltage is just under the voltage level "1", the LED will glow dimly.
OUTPUT	Yellow	Lights when it receives a high signal from an output. The LED shines more brightly the more voltage is output.
F	Red	Turns off when the board approves the initialisation.

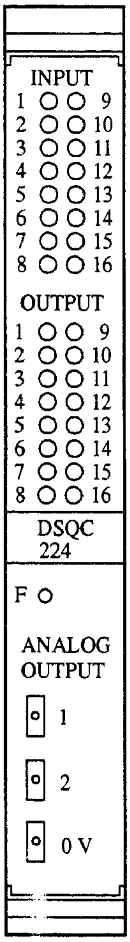

2.8 Combined I/O board DSQC 315

Designation	Colour/Type	Description
INPUT	Yellow	See digital I/O board.
OUTPUT	Yellow	See digital I/O board.
F	Red	Turns off when the board approves the initialisation.
1	Measuring terminal	CH1, 0 - +10V
2	Measuring terminal	CH2, 0 - +10V
0V	Measuring terminal	0V

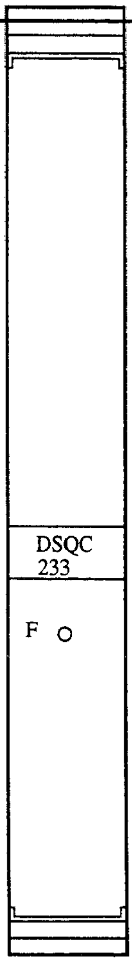

2.9 Axis board DSQC 233

Designation	Colour	Description
F	Red	Turns off when the board approves the initialisation.
Inputs (SYNC)		Low -21V to +2V High +19V to +35V

2.10 Drive unit rack

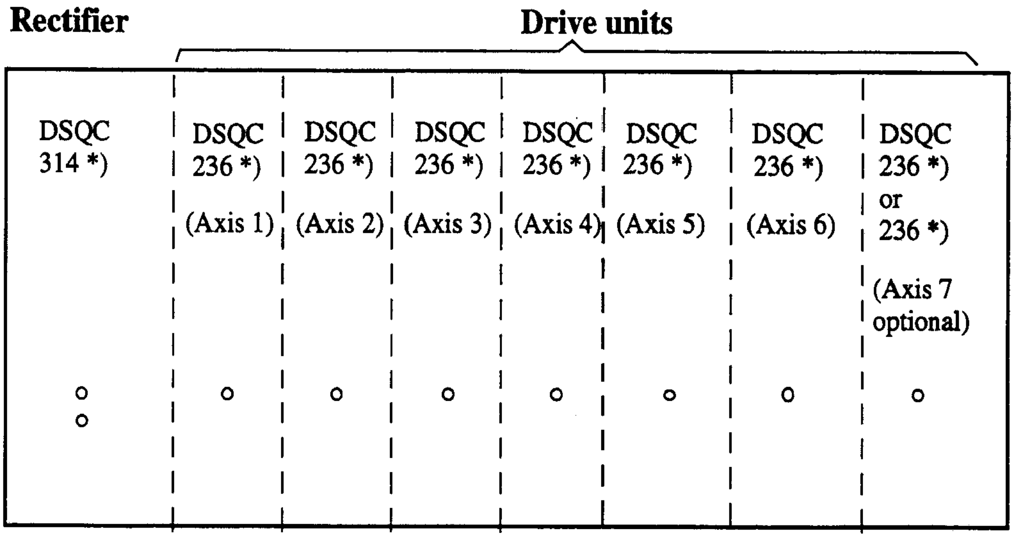

*) see ciruit diagram, Drive system

Designation	Colour	Description
DSQC 314 A	Red	Turns off when the board approves the initialisation. Lights if there is an error associated with the rectifier.
DSQC 314 A	Green	Lights when power is supplied to the rectifier.
DSQC 236	Red	Turns off when the board approves the initialisation. Lights if there is an error associated with a drive unit.

3 Measuring Points – I/O Backplane

The I/O backplane contains many measuring points and these can come in very handy when troubleshooting.

3.1 X81 VBATT 1:

Voltage of battery 1; the voltage must be between 3.3 V and 3.6 V.
Battery back-up for the memory of the main computer, robot computer and real-time clock.

No.	Signal
1	VBATT1
2	0 V

3.2 X82 VBATT 2:

Voltage of battery 2; the voltage must be between 3.3 V and 3.6 V.
Battery back-up for the memory of the main computer, robot computer and real-time clock.

No.	Signal
1	VBATT2
2	0 V

3.3 X51 I/O terminal

Terminal connection on the robot computer; RS 232 signal interface.

No.	Signal	
1	–	
2	RXD5	Receive data
3	TXD5	Transmit data
4	DTR5	Data Terminal Ready
5	0 V	
6	–	
7	RTS5	Request To Send
8	CTS5	Clear To Send
9	–	

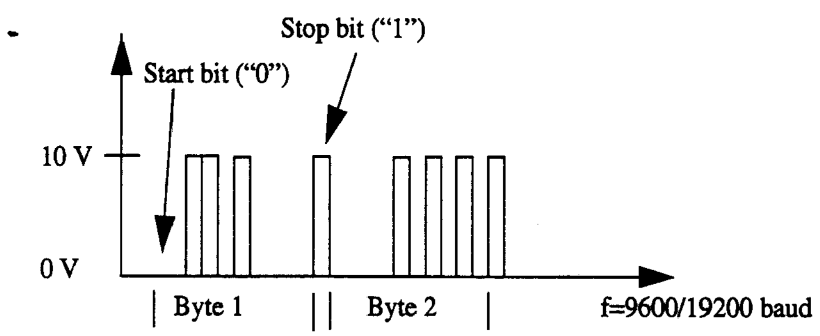

Figure 1 Signal description for RS-232

3.4 X4 Drive system

No.	A	B	C	
				The current references are received from the axis computer and are sinusoidal during normal operation
1	0V	–	0V	
2	IREF_RCH1	–	0V	Current reference R-phase drive unit 1 (-10 V ≙ to + 10 V)
3	IREF_SCH1	–	0V	Current reference S-phase drive unit 1 (-10 V ≙ to + 10 V)
4	IREF_RCH2	–	0V	Current reference R-phase drive unit 2 (-10 V ≙ to + 10 V)
5	IREF_SCH2	–	0V	Current reference S-phase drive unit 2 (-10 V ≙ to + 10 V)
6	IREF_RCH3	–	0V	Current reference R-phase drive unit 3 (-10 V ≙ to + 10 V)
7	IREF_SCH3	–	0V	Current reference S-phase drive unit 3 (-10 V ≙ to + 10 V)

8	IREF_ RCH4	–	0V	Current reference R-phase drive unit 4 (-10 V ≙ to + 10 V)
9	IREF_ SCH4	–	0V	Current reference S-phase drive unit 4 (-10 V ≙ to + 10 V)
10	IREF_ RCH5	–	0V	Current reference R-phase drive unit 5 (-10 V ≙ to + 10 V)
11	IREF_ SCH5	–	0V	Current reference S-phase drive unit 5 (-10 V ≙ to + 10 V)
12	IREF_ RCH6	–	0V	Current reference R-phase drive unit 6 (-10 V ≙ to + 10 V)
13	IREF_ SCH6	–	0V	Current reference S-phase drive unit 6 (-10 V ≙ to + 10 V)
14	IREF RCH7	–	0V	Current reference R-phase drive unit 7 (-10 V ≙ to + 10 V)
15	IREF SCH7	–	0V	Current reference S-phase drive unit 7 (-10 V ≙ to + 10 V)
16	0V	–	0V	
17	SA0	–	SA1	Status address bus to the drive unit from the axis computer.
18	SA2	–	SA3	
19	SA4	–	SA5	
20	STATO	–	STAT1	Status signals from the drive unit.
21	0V	–	0V	
22	DRVFLT-N	–	RUNNING	From drive unit; RUNNING: 0 = STANDBY or STANDBY FAULT. 1 = RUNNING or RUNNING FAULT. DRVFLT-N: error signal from drive unit
23	DRESET-N	–	FLTRES-N	DRESET-N, FLTRES-N = A negative reset pulse
24	0V	–	0V	DRESET-N, FLTRES-N = A negative reset pulse
25	0V	–	0V	
26	+15V	–	+15V	Tolerance 5%
27	+15V	–	+15V	Tolerance 5%
28	-15V	–	-15V	Tolerance 5%
29	-15V	–	-15V	Tolerance 5%
30	0V	–	0V	
31	0V	–	0V	
32	–	–	–	

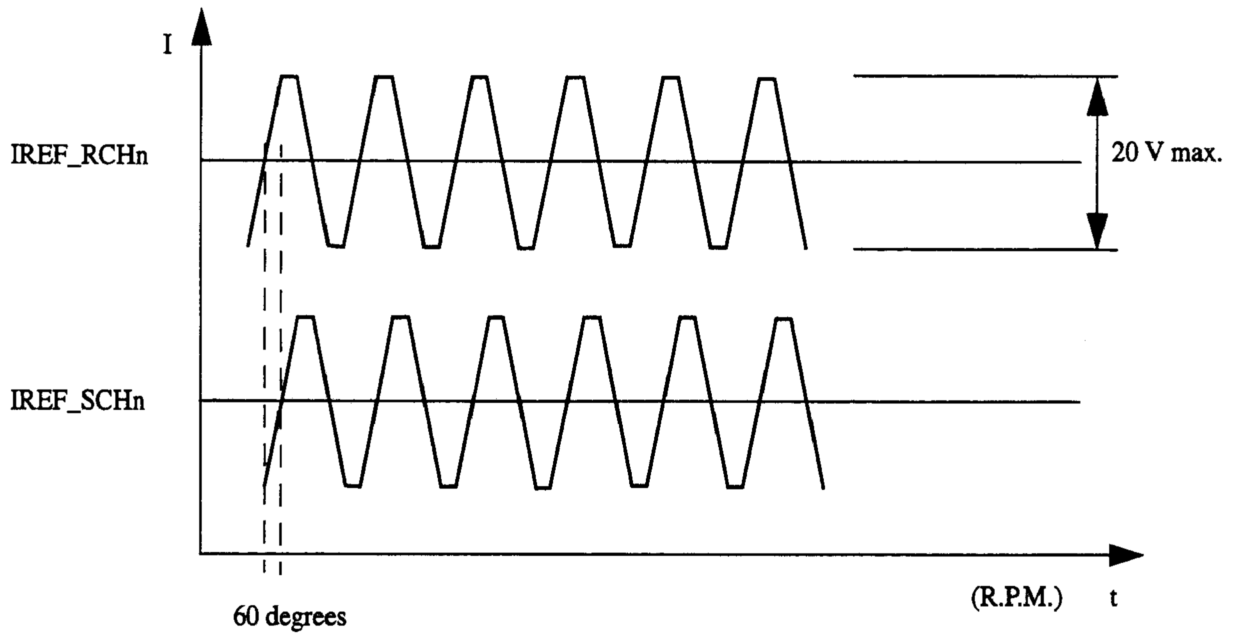

Figure 2 Approximate appearance of signals in normal operating conditions (a form of sine wave).

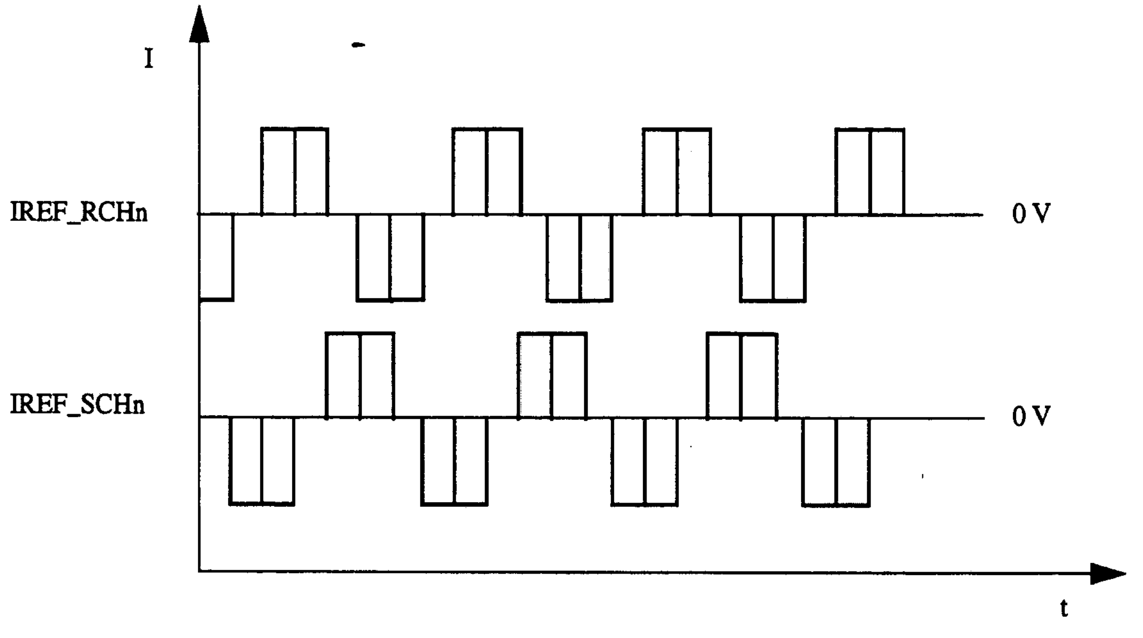

Figure 3 Approximate appearance of signals during incremental execution using the Motor test program.

3.5 X5 Serial links: SIO-1, SIO-2, SIO-3, SIO-4

General serial interfaces: SIO-1, -2 and -3 are RS232 interfaces; SIO-4 is an RS485 interface.

SIO-1 RS 232

No.	Signal	No.	Signal	No.	Signal	No.	Signal
1	TXD1	10	RXD1	19	RTS1	28	CTS1
2	DSR1	11	DTR1	20	RIC1	29	DCD1
3	RCLK1	12	TCLK1	21	0V		

SIO-2 RS 232

						30	TXD2
4	RXD2	13	RTS2	22	CTS2	31	DSR2
5	DTR2	14	RIC2	23	DCD2		

SIO-3 RS 232

						32	TXD3
6	RXD3	15	RTS3	24	CTS3	33	DSR3
7	DTR3	16	RIC3	25	DCD3	34	0V

SIO-4 RS 485

8	TXD4	17	TXD-4-N	26	RXD4	35	RXD4-N
9	DATA4	18	DATA4-N	27	DCLK4	36	DCLK4-N

Explanation of signals:
TXD = Transmit Data, RXD = Receive Data, DSR = Data Set Ready, DTR = Data Terminal Ready, CTS = Clear To Send, RTS = Request To Send, DCD = Data Carrier Detect, RCLK = Receive Clock, TCLK = Transmit Clock, RIC = Ring Indicator, TXD4 and TXD4-N = Transmit Data in Duplex Mode, RXD4 and RXD4-N = Receive Data in Duplex Mode, DATA4 and DATA4-N = Data Signals in Half Duplex Mode, DCLK4 and DCLK4-N = Data Transmission Clock..

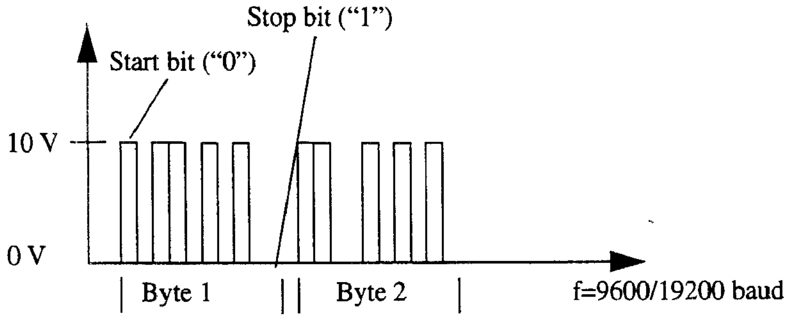

Figure 4 Signal description for RS-232.

The transmission pattern can be single or bursts of 10-bit words, with one start bit "0", eight data bits (MSB first) and lastly one stop bit "1".

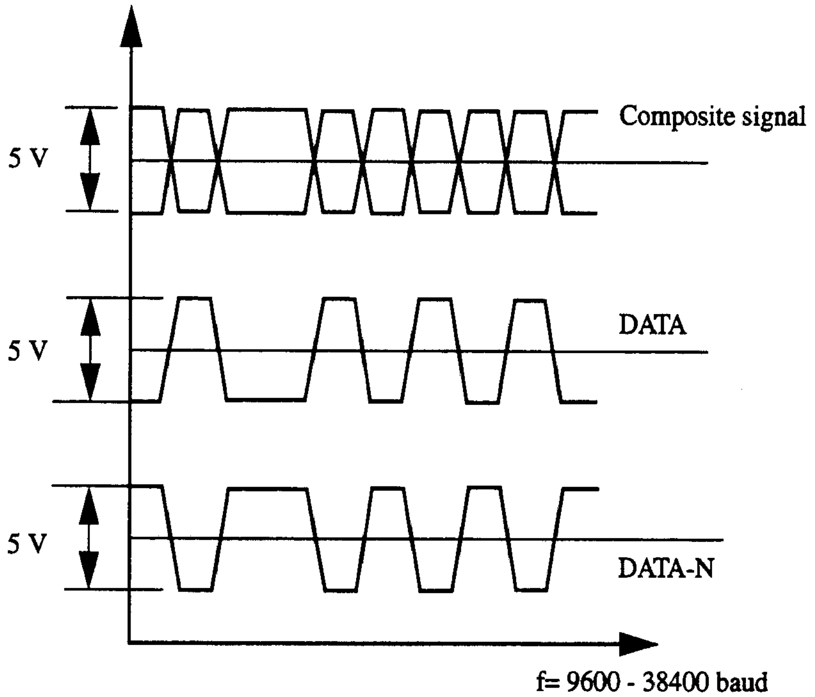

Figure 5 Signal description for RS-485, differential transmission.

When measuring the differential RS-485 signals, the oscilloscope should be set for AC testing. The data transmission has the same structure as RS-232, i.e., 1 start bit + 8 data bits + 1 stop bit, but the signals are differential. By looking at the "true" channel, it is possible to read the data.

If the type of signals in the above diagram are obtained when measuring, this means that the drive circuits and lines are OK. If one or both of the signals do not move, it is likely that one or several line(s) or one or several drive circuit(s) is/are faulty.

3.6 X33 LCD

The RS 485 connection is not used at present.

No.	Signal
1	DATA8
2	DATA8-N
3	0V
4	+24V

3.7 X22 Power supply to the disk drive unit

Power supply to the drive unit.

No.	Signal	
1	0V	
2	+5V	± 5%

3.8 X2 Disk drive

The signal interface with the disk drive; TTL levels "0" <=> 0V, "1" <=> +5V.

No.	A	B	Signals to/from the I/O computer
1	0V	HD-N	High Density, static active low. Indicates that a 1.44 Mb diskette is in the unit.
2	0V	-	
3	0V	-	
4	0V	IP-N	Index, pulses. One pulse per cycle, c. every 200 milliseconds.
5	0V	MO-N	Select drive 0, static active low. Indicates that the built-in unit is selected.
6	0V	MO-N	Select drive 1, static active low. Indicates that an external unit is selected.
7	0V	-	
8	0V	MO-N	Motor on, static active low. Starts the motor in the selected unit.
9	0V	DIRC-N	Direction in, static active low. Indicates that the heads are to move inwards.
10	0V	STEP-N	Step, pulses. Steps the heads in the direction indicated by DIRC-N.
11	0V	WD-N	Write Data, pulses. Data pulses when writing to the diskette.
12	0V	WG-N	Write Gate, pulses. Enables writing.
13	0V	TR00-N	Track 00, active low. Indicates that the heads are located at track 0 of the diskette.
14	0V	WP-N	Write Protect, static active low. Indicates whether or not the diskette is write-protected.
15	0V	RD-N	Read Data, pulses. Data pulses when reading the diskette.
16	0V	SS0-N	Side Select, static active low. Indicates which side of the diskette is active.
17	0V	DSKCHG-N	Disk Change, static active low. Indicates whether or not there is a diskette in the unit.

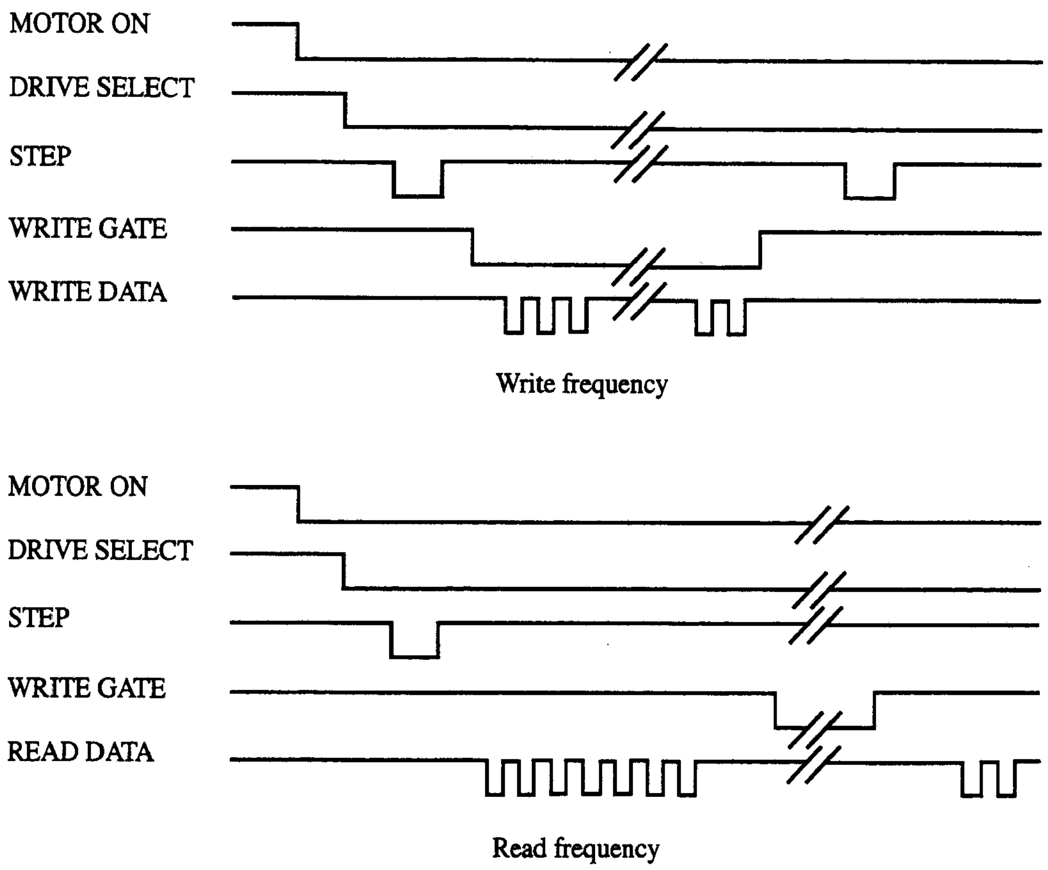

Figure 6 Diagram of write and read frequencies.

3.9 X31 Measuring system

The signal interface with the serial measuring system. It complies with the EIA RS 485 standard, which means that signal transmission is differential (see Section 3.5 above for an explanation of the signals).

No.	Signal	No.	Signal	No.	Signal
3	+24V	2	RCI	1	RCO
6	0V	5	RCI-N	4	RCO-N

The RCO signals travel from the system to the measuring boards.
The RCI signals enter the system from the measuring boards.

3.10 X32 Teach pendant

The signal interface with the teach pendant. The signals comprise both static signals included in the operation chain, supply + 24V with a neutral conductor, and data transmission signals. The data transmission complies with the EIA RS-485 standard (see Section 3.5 above for an explanation of the signals).

No.	Signal	No.	Signal	No.	Signal
3	ENDEV-N	2	ENDEV	1	ES1B
6	ES2A			4	ES2B
9	ES1A				

		5	+24V			Voltage supply
		8	0V	7		"
12	DATA7-N	11	DATA7	10		Communication RS 485

3.11 X34 Operator's panel

The signal interface with the operator's panel. The signals are exclusively static 0V - + 24V.

No.	Signal	No.	Signal	No.	Signal	No.	Signal
4	ES1C	3	ES2C	2	0V	1	0V
8	GSTOP2A	7	GSTOP1A	6	MSTOP2	5	0V
12	ASTOP2	11	MSTOP1	10	ASTOP1		
16	ESTOP2	15	ESTOP1	14	LIMIT2		
20	MANFS	19	MAN	18	AUTO		
24	+24V	23	ES1B	22	ES2B		

Operation chain

Button MOTORS OFF	9	STANDBY PB
Button MOTORS ON	13	RUN PB
Light MOTORS ON	17	STANDBY LIGHT
Light MOTORS OFF	21	RUN LIGHT

20	MANFS	19	MAN	18	AUTO

Operating mode selector

Manual Full speed	Manual Reduced speed	Automatic operation

24	+24V	23	ES1B	22	ES2B

Emergency stop chain between the operator's panel and the teach pendant

Explanation of signals:
ES1B and ES1C = Emergency stop chain 1, ES2B and ES2C = Emergency stop chain 2, GSTOP1A and GSTOP2A = General Stop, MSTOP1 and MSTOP2 = Manual Stop, ASTOP1 and ASTOP2 = Auto Stop.

3.12 X35 System boards, feed device, cabling

Static signals included in the operation chains which have voltage levels of 0V - +24V. Any break in the operation chains or in the PTC resistance fuses (F3 and F4) can be detected quickly at the following test points.

No.	Signal	No.	Signal	No.	Signal	No.	Signal
4	ES2A	3	ES1A	2	ES2C	1	ES1C
8	ENDEV-N	7	MSTOP2	6	GSTOP1A	5	GSTOP2A
12	+24V	11	ASTOP1	10	MSTOP1	9	ASTOP2
16	+24V	15	LIMIT2	14	ESTOP1	13	ESTOP2
20	24VSYS	19	AUTO	18	MAN	17	MANFS
24	ENDEV	23	ENDEVB	22	0V	21	0V

Explanation of signals:
ES2A and ES1A = External emergency stop chain; ES1C and ES2C = Internal Emergency stop chain; ENDEV, ENDEVB and ENDEV-N = Manual Stop Enabling device T-Pendant; MSTOP1 and MSTOP2 = Manual Stop; ASTOP1 and ASTOP2 = Auto Stop; GSTOP1A and GSTOA = General Stop; LIMIT2 = Limit switch; AUTO, MAN and MANFS = Operating mode selector.
Use the system circuit diagram in chapter 12 of this manual when troubleshooting.

Figure 7 provides an overview of the operation chains.

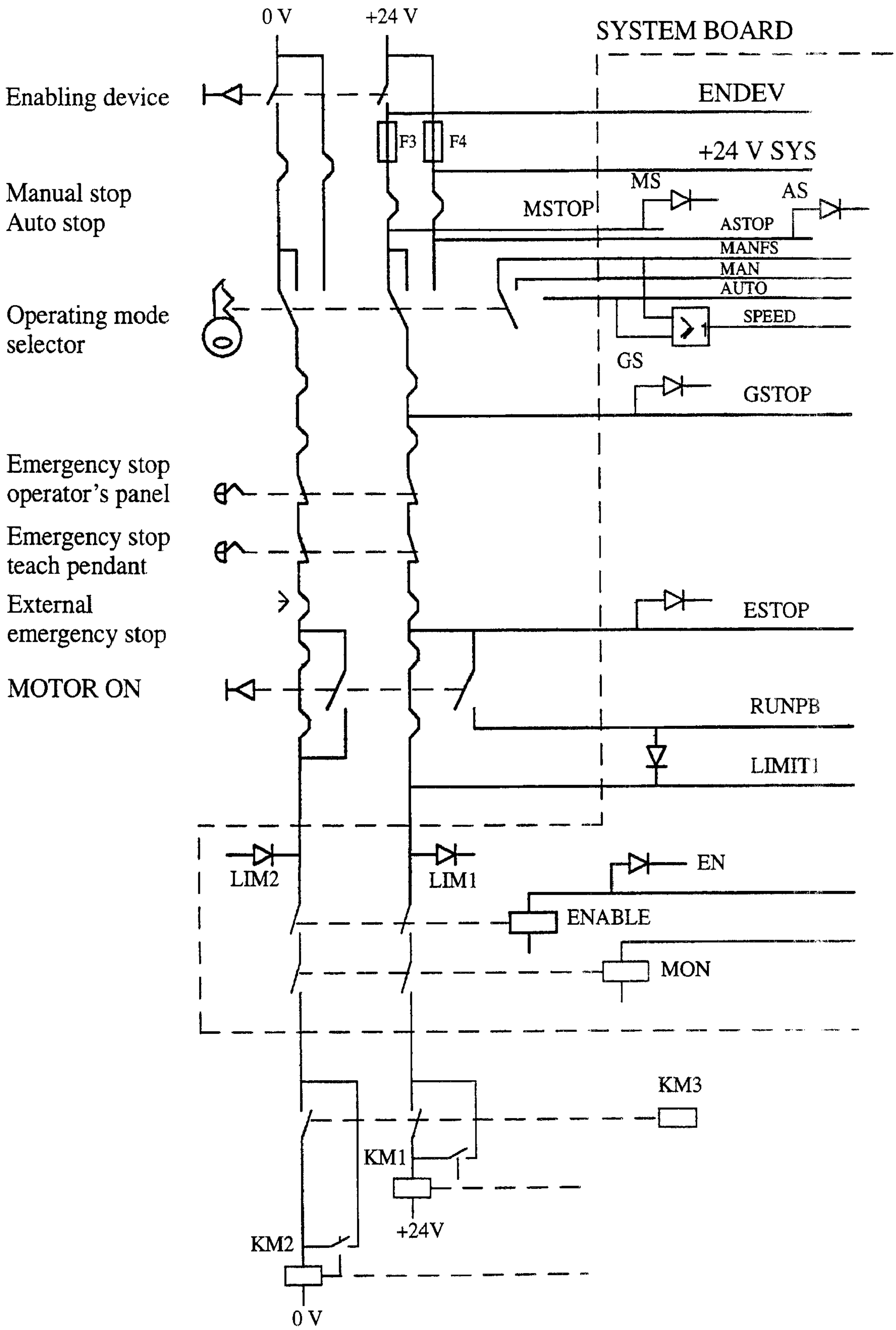

Figure 7 Overview of the operation chains.

CONTENTS

CONTENTS

Page

Fault tracing guide

Sometimes errors occur which neither refer to an error message nor can be remedied with the help of an error message.

To make a correct error diagnosis of these particular cases, you must be very experienced and have an in-depth knowledge of the system. This section of the Product Manual is intended to provide support and guidance in any diagnostic work.

1 Starting Troubleshooting Work

Always start off by consulting a qualified operator and/or check any log books available to get some idea of what has happened, to note which error messages are displayed, which LEDs are lit, etc. If possible, look at the system's error log; if there are any error messages there, it can be accessed from the Service menu. On the basis of this error information, you can start your analysis using the various tools, test programs, measuring points, etc., available.

Never start off by wildly replacing boards or units since this can result in new errors being introduced into the system.

1.1 Intermittent errors

Unfortunately, intermittent errors sometimes occur and these can be difficult to remedy. This problem can occur anywhere in the system and may be due to external interference, internal interference, loose connections, dry joints, heating problems, etc.

To identify the unit in which there is a fault, note and/or ask a qualified operator to note the status of all the LEDs, the messages on the teach pendant, the robot's behaviour, etc., each time that type of error occurs.

It may be necessary to run a lot of test programs in order to pinpoint the error; these are run in loops, which ought to make the error occur more frequently.

If an intermittent error occurs periodically, check whether something in the environment in which the robot is working also changes periodically. It may, for example, be caused by electrical interference from a large electrical plant which only operates periodically. Intermittent errors can also be caused by considerable temperature changes in the workshop, which occur for different reasons.

1.2 Tools

Usually, the following tools are required when troubleshooting:

- Normal shop tools
- Multimeter
- Oscilloscope
- (Measurement printer)
- (Diagnostic strap, digital I/O, no. 3HAB 1005-2)
- (Diagnostic strap, digital I/O, no. 3HAB 1059-2)
- (Diagnostic strap, digital I/O, no. 3HAB 1060-2)

- (Diagnostic strap, analog I/O, no. 3HAB 1006-2)
- (Diagnostic strap, analog I/O, no. 3HAB 1061-2)
- (Extension board for I/O boards).

2 Specifications & Tips

To run the test programs, at least the DSQC 326/335 robot computer and the DSQC 316/325 main computer and memory DSQC 317/321/323 or 324 must be connected.

2.1 System

System, in this case, means the entire robot system, cabinet, mechanics and customer interfaces.

System errors can occur in the form of several different errors where it is difficult to localise the error, i.e., where it is not possible to pinpoint the unit directly that caused the problem. For example, if it is not possible to cold-start the system, this may be due to several different errors (the wrong diskette, a robot computer fault, a drive unit fault, etc.). The diagnostic diagrams can be very useful when this happens.

2.2 Main computer DSQC 316/325

The main computer, which is connected to the VME bus and the local bus of the memory expansion board, looks after the higher-level administrative work in the control system. Under normal operating conditions, all diagnostic monitoring is controlled by the main computer. At start-up, irrespective of whether a cold or warm start is performed, the robot computer releases the main computer when the robot computer's diagnostics allows it and, following this, the main computer takes over the control of the system. The read and write memories of the main computer are battery-backed.

If the red LEDs on the main computer light up (or do not go off at the initialisation), either a critical system failure has occurred or the main computer board or expansion memory is faulty.

It is not possible to carry out diagnostics on the board in the operation environment and, thus, if the main computer is faulty, it must be replaced.

2.3 Robot computer DSQC 326/335

The robot computer, which controls the system's I/O, axis control, serial communication and teach pendant communication, is the first unit to start after a cold or warm start. The red LED on the front of the board goes off immediately when the system is reset and goes on again if an error is detected in the tests. As mentioned above, the robot computer releases the main computer when the preliminary diagnostics have given the go ahead-signal.

The read and write memories of the robot computer are battery-backed.

If the system does not start at all, and the LED on the robot computer goes on, the error is probably in the robot computer, but may also be caused for other reasons indicated in the diagnostic diagrams.

It is not possible to carry out diagnostics on the board in the operation environment and, thus, if the robot computer is faulty, it must be replaced.

2.4 Expansion memory DSQC 317/321/323/324

The expansion memory, which is battery-backed, is an extension of the main computer memory.

The communication between the main computer and the expansion memory takes place over a specific memory bus in the backplane from which the board is also supplied. Only one signal is carried over the VME bus (the upper contact), namely VSYSRESET-N.

The board has an LED, F, which is lit and turned off by the main computer.

It is not possible to carry out diagnostics on the board in the operation environment and, thus, if the expansion memory is faulty, it must be replaced.

2.5 System board DSQC 256A

The DSQC 256A system board controls and reads the dual operation chain. Its status is also indicated by LEDs on the front of the board. The board has, in addition, three sensor inputs for inductive sensors, for example.

The temperature of the motors is monitored by PTC inputs to the board.

LED indications for DSQC 256A

Marking	Colour	Meaning
SENSOR	YELLOW/YELLOW/ YELLOW	Lights when signals are received from the appropriate sensor
F	RED	Indicates that the board is not initialised
EN	GREEN	Indicates "go ahead" from the control system
AS MS GS ES LIM ERR	YELLOW YELLOW YELLOW YELLOW YELLOW/YELLOW RED	Channel 1 connected until AUTO STOP Channel 1 connected until MANUAL STOP Channel 1 connected until GENERAL STOP Channel 1 connected until EMERGENCY STOP Channels 1 and 2 are connected until LIMIT switch RUN factors are not the same

The LEDs are very useful when trying to locate errors in the operation chain. Unlit LEDs indicate the whereabouts of an error in the operation chain, making the error easy to find in the system circuit diagram. Only operation chain 1, however, has a full set of LEDs; operation chain 2 has only one LED, "LIM 2".

2.6 To read the state of the system board LEDs on the teach pendant

- Call up the *Boards* list by choosing **View: Boards**.
- Select the system board and press the ***State*** function key.

The values of all digital signals related to the system board will appear on the display (see Figure 1). The values of the signals are indicated by 1 or 0, where, 1 is equivalent to LEDs "ON" and 0 is equivalent to LEDs "OFF" on the system board.
See Figure 1 for exceptions.

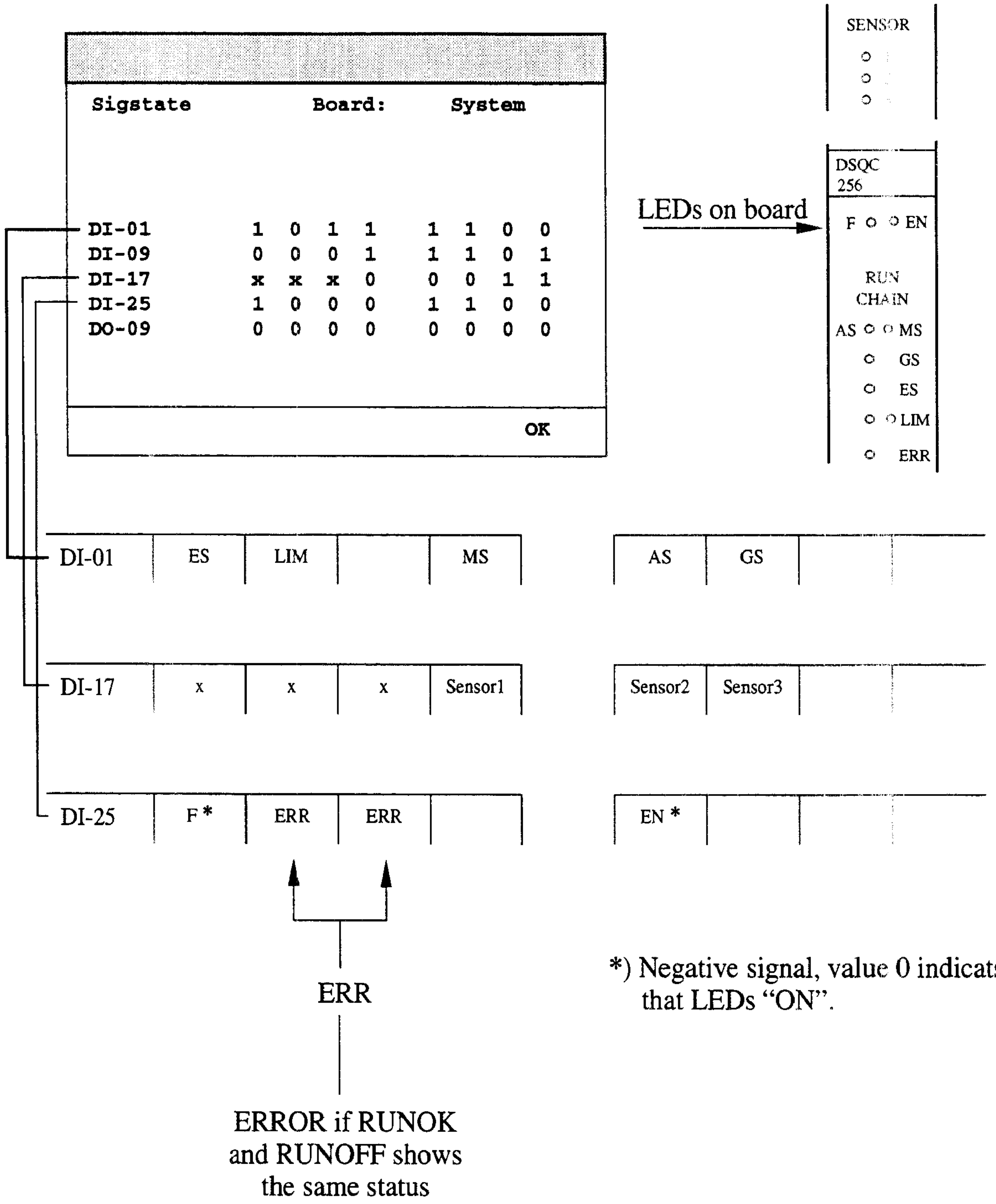

Figure 1 The value of all digital signals of the system board are displayed on a signal chart.

- Leave the signal chart by pressing ***OK***.

2.7 Process I/O

Process I/O communicates with the I/O computer, located on the robot computer board, via the backplane bus. The I/O boards must be defined in the system parameters for them to work.

The I/O channels can be read and activated from the I/O menu on the teach pendant.

2.8 Digital I/O DSQC 223

The digital input and output board, DSQC 223, has 16 optoinsulated inputs and 16 optoinsulated outputs. Each input and output has its own yellow LED which indicates whether or not the input/output is activated. The inputs and outputs normally receive their 24 V-supply from a customer connection, but this can also be supplied internally by strapping. If none of the I/O channels work, check first that the boards are initialised (the red F-LED should be off on all I/O boards). Note that if, for some reason, the system's system parameters change, this may indicate that the I/O boards are faulty.

Check also that the boards have a 24 V-supply (internal or external). Common sources of errors are cable faults, sensor faults, etc.

You can use the I/O menu on the teach pendant to check whether the current I/O board is OK.

2.9 Analog I/O DSQC 209

The analog I/O board, DSQC 209, converts analog input signals to digital and vice versa. The signal level equals 10 V in and out with a resolution of 12 bits including characters. The board is supplied with ±15 V, either internally or externally. The analog side of the board is galvanically-insulated from the system. One of the outputs, 4, is the current output, which can drive or sink a current of 20 mA. The board has a test input/output on the front panel and a test switch, which can be used to test whether the board is working properly. By turning the test switch to the position for measuring inputs (2-5), a power supply can be connected to the test terminal (protecting resistance should be used in the serial channel) to test whether the inputs are working properly.

The Service menu can be used to check the status of the inputs and outputs. Outputs can be controlled manually and inputs can be read from the I/O menu. Common causes of errors are cable faults or faults in external equipment. If none of the channels work, check that the internal or external ±15 V supply is OK and correctly connected. If the red F-LED is lit, the board is probably faulty or the system parameters are incorrect (i.e. the board is not defined).

<u>Test terminal for analog I/O</u>

Position of switch	Function
1	+ 15 V
2	Channel 1 input
3	Channel 2 input
4	Channel 3 input
5	Channel 4 input
6	0 V
7	Channel 4 output (current signal, load-dependent)
8	Channel 3 output
9	Channel 2 output
10	Channel 1 output
11	- 15 V

2.10 Combined I/O DSQC 315

The combined I/O, DSQC 315, is equipped with 16 digital inputs, 16 digital outputs (see DSQC 223 above) and 2 analog outputs 0-10 V. See digital I/O and analog I/O above for a specification and tips.

2.11 Serial digital I/O DSQC 239

The serial I/O interface, DSQC 239 (RIO), is intended to be used for communication with Allen-Bradley PLC equipment. The board is equipped with 32 yellow LEDs (which indicate the status of the first 16 inputs and outputs on the front panel), a red F-LED and a green LED, "ACTIVE".

If the green LED is not lit, and the red one goes off, the board's special communication circuit is probably faulty. If the F-LED is lit, the board is most likely faulty, or else not defined in the system parameters.

3 Serial Communication

The robot computer has four serial communication channels: SIO1, SIO2, SIO3 and SIO4. Of these, the first three signal interfaces are of RS232 type and the fourth signal interface is of RS485 type. The measuring points on the backplane are X5 SERIAL LINKS. The main computer has one serial channel of type RS232.

The most common causes of errors in serial communication are faulty cables (e.g. mixed-up send and receive signals) and transfer rates (baud rates), or data widths that are incorrectly set. If there is a problem, check the cables and the connected equipment before doing anything else.

4 Drive System and Motors

The drive system, which consists of rectifiers, drive units and motors, is controlled by the axis computer, located on the robot computer board.

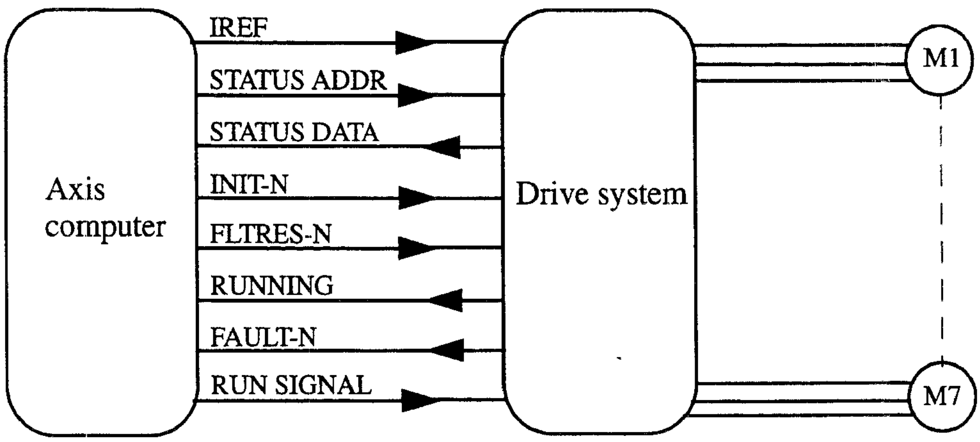

Figure 2 A schematic description of the drive system.

Faults in the drive system are normally indicated by LEDS on the drive unit or rectifier, or by the monitoring program in the axis computer.

The rectifier has two LEDs: one green (OK) and one red (FAULT).
The "OK" LED is lit when the mains voltage to the rectifier is on.

The "FAULT" LED is lit when the following faults occur:

Excess voltage	The feedback from the drive unit is so powerful that the shunt regulator cannot keep the intermediate link voltage down. The mains voltage is too high.
Excess temperature in rectifier	Too much medium power has been used. Ambient temperature too high.
Excess temperature in shunt regulator	Too much medium power has been fed back from the drive units.

The following fault is only indicated by the axis computer; in other words, the LEDs do not light up:

Incorrect mains voltage	Either one of the phases is missing or the voltage is too low.

There is a red FAULT LED on the front of the drive units. "FAULT" is indicated when the following faults occur:

- An error interrupt in the motor circuit
- Errors in the control system
- Short-circuit in the motor or cabling
- Damaged drive unit or incorrect load cycle

If the manipulator moves in an abnormal way, and if no error messages are displayed and no LEDs light up, the motor test program, MOTOR.PRG, on the configuration diskette, should be run. Using this test program, the motors can be stepped, one at a time, which facilitates troubleshooting.

Some of the signals to the drive system can be controlled by a test program using the teach pendant. These signals are located in the form of measuring points (X41, X42, X43 and X4) on the backplane (see Section 6, Test Outputs for Standard Test Signals and Measuring Points).

Tip If the manipulator seems to have become weaker, this may be due to an incorrect commutation offset.

If a drive unit or rectifier is faulty, these units should be replaced. Troubleshooting can not be performed in the operating environment.

5 Teach Pendant

The teach pendant communicates with the robot computer via a cable. This cable is also used for the +24 V supply and the dual operation chain. The unit's communication signals are fuse-protected on the backplane (F1 and F2).

An error in the teach pendant may mean that the rest of the system cannot be used. If the teach pendant seems to be completely dead, but the rest of the system is working correctly, a cable break has probably occurred.

Communication errors between the teach pendant and the I/O computer are indicated by error messages on the teach pendant and also when the red LED on the I/O computer lights up.

The backplane has measuring points for the teach pendant signals, X32 TEACH PENDANT.

6 Measuring System

The system has one serial measuring board, used to collect resolver data. The serial measuring board is located in the manipulator and is battery-backed. It is charged by the system's +24 V supply. Communication with the axis computer takes place across a differential serial link (RS 485).

The measuring system contains information on the position of the axes and this information is continuously updated during operation. If the resolver connections are disconnected or if the battery goes dead after the robot has been stationary for a long period of time, the manipulator's axis positions will not be stored and must be updated. The axis positions are updated by manually jogging the manipulator to the synchronised position and then, using the teach pendant, setting the counters to zero. If you try to start program execution without doing the above, the system will give an alarm to indicate that the system is not calibrated.

Measuring points for the measuring system are located on the backplane (X31 MEASUREMENT SYSTEM). See Section 6 for more detailed information.

Note that it is necessary to re-calibrate after the resolver lines have been disconnected. This applies even if the manipulator axes have not been moved.

Transmission errors are detected by the system's error control, which alerts and stops program execution if necessary.

Common causes of errors in the measuring system are line breakdown, resolver errors and measuring board interference. The latter type of error relates to the 7th axis, which has its own measuring board and may be positioned too close to a source of interference.

7 Axis Board DSQC 233

DSQC 233 is intended for use as an axis board for ABB and customer-specific external axes. The board is controlled by the axis computer via a serial bus on the backplane and can handle six axes.

Connections:

- Resolvers and tachometers
- Resolver supply with programmable offset
- Optically-insulated sync. inputs
- References to number of revolutions.

The board is equipped with a red F-LED on its front, lit by the axis computer whenever there is an error.

8 Disk Drive

The disk drive is controlled by the I/O computer via a flat cable. It is supplied by means of a separate cable.

Common errors are read and write errors, generally caused by faulty diskettes. In the event of a read and/or write error, format a new, good-quality diskette and check to see if the error disappears. If the error is still present, the disk drive will probably have to be replaced; check the flat cable first though.

NB: Never use diskettes without a manufacturer's mark. Unmarked, cheap diskettes can be of very poor quality.

If the disk drive is completely dead, check the supply voltage to see if it is +5 V before replacing the drive.

Measuring points are available on the backplane: X22 FDU POWER and X2 FLOPPY DISC UNIT. When replacing the disk drive, check that the strapping is set correctly on the unit.

9 Fuses

There is an automatic three-phase, 3 x 242 V, fuse, which supplies the rectifier in the **MOTORS ON** state, on the transformer. It also has two 220 V fuses: one for the electronics feed device and the other is used for customer connections.

The backplane has four PTC resistance fuses: F1 and F2, used to protect the teach pendant's communication signals; and F3 and F4 for the operation chains. The F1, F2, F3 and F4 fuses protect against short-circuits and return to their normal state when there is no longer a risk of short-circuiting.

10 Troubleshooting Guide

The following Troubleshooting Guide should be used as follows:

Look at the error specifications below and see if any of them correspond to the current problem. When you find a suitable explanation, locate the flow chart that has the same number as the description. Follow the instructions in the chart and hopefully you will be able to solve the problem quite quickly.

If it is not possible to solve the problem on your first attempt, select another flow chart with similar contents (an error can be explained at another level). Each step in any flow chart requires one or more actions to be performed. It is important that you follow these instructions exactly in order for the diagnosis to be correct. Each action suggested has a reference, which provides a detailed description of how to remedy a particular problem.

On occasion, an unpredicted error that is not included in any flow chart may occur. If such an error occurs, make a record of what happened, in as much detail as possible, and send it to ABB Robotics Products in Västerås; mark it for the attention of the Product Manager.

10.1 Diagnostic diagrams/flow charts – contents

1. The system cannot be warm-started, only cold-started.
2. The system goes completely dead, either at start-up or during operation.
3. The teach pendant is dead.
4. The teach pendant is on, but displays only a flashing cursor and does not react when you press any of the keys.
5. The robot computer's LED is lit, but no error message is displayed on the display of the teach pendant.
6. The system will not start operating. An emergency stop is indicated by means of the "MOTORS OFF" LED.
7. Certain boards are not initialised.
8. The robot computer's LED is lit, but changing the board or resetting the memory does not help. The supply voltages are OK.
9. Digital input is not detected.
10. Errors in the digital output.
11. Analog output does not work.
12. Analog input does not work.
13. The system will not start operating using the enabling device on the teach pendant.
14. The manipulator operates in jerks.

10.2 Diagnostic diagrams

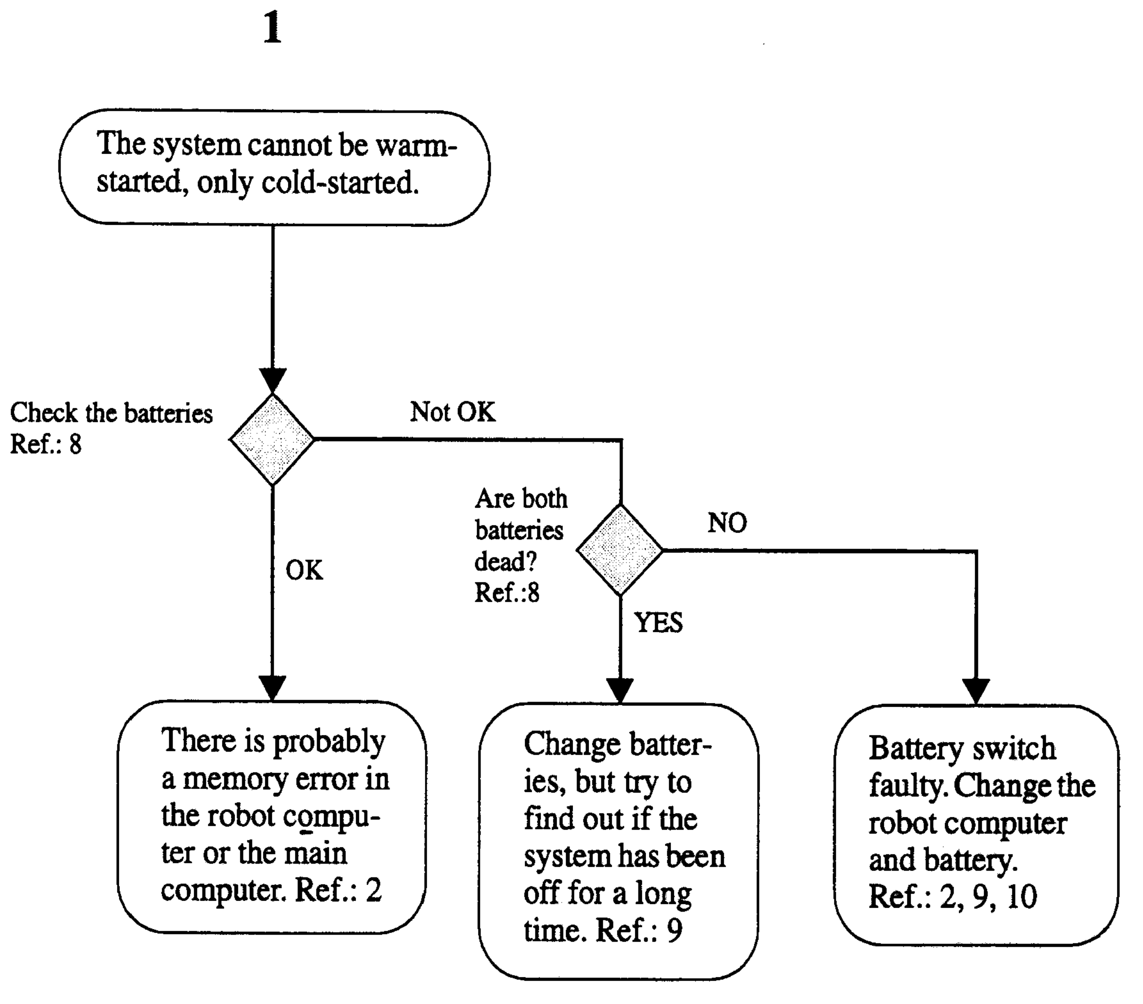

Fault tracing guide

2

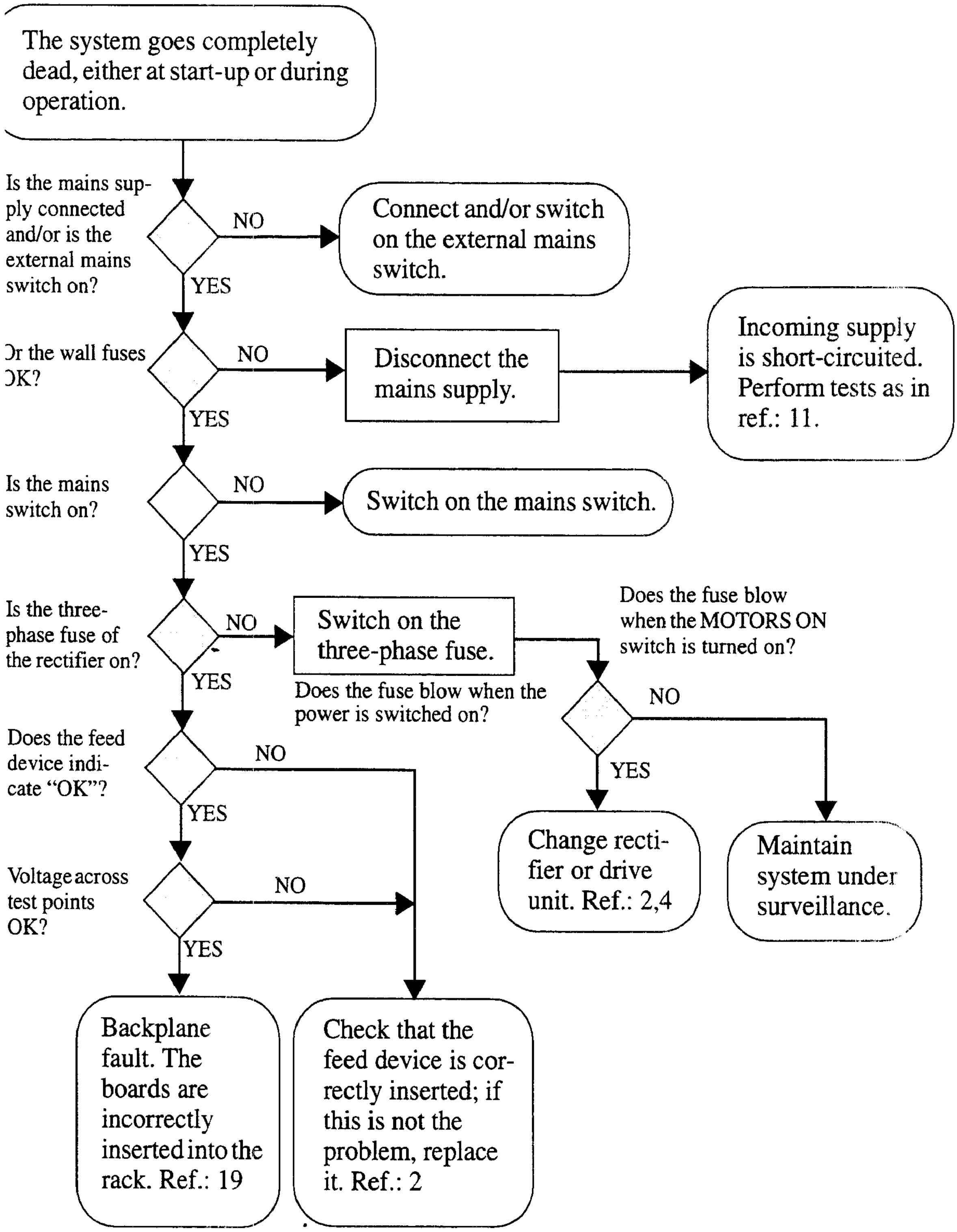

If none of the measures recommended in this diagram solve the problem, contact a specialist.

3

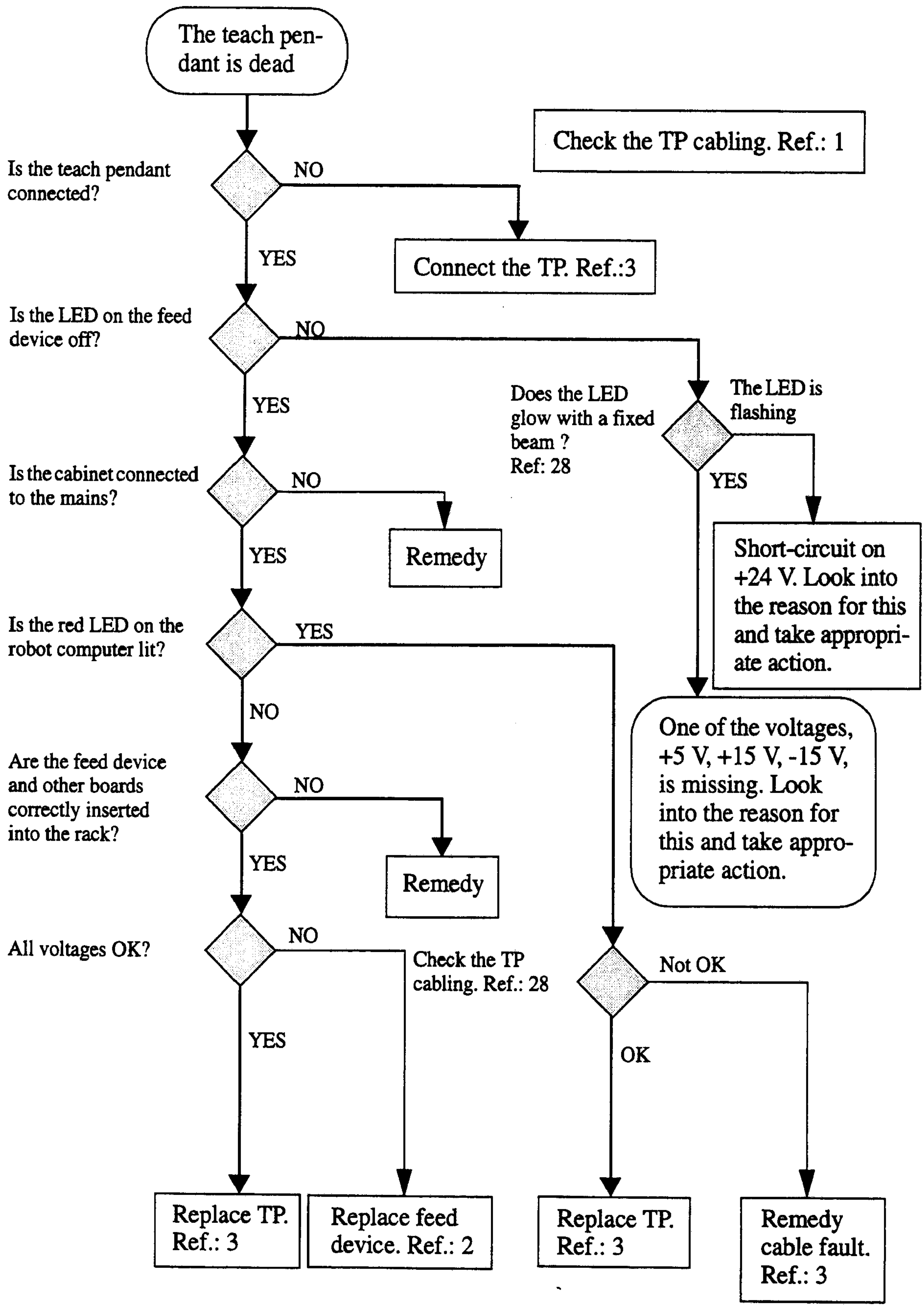

If none of the measures recommended in this diagram solve the problem, contact a specialist.

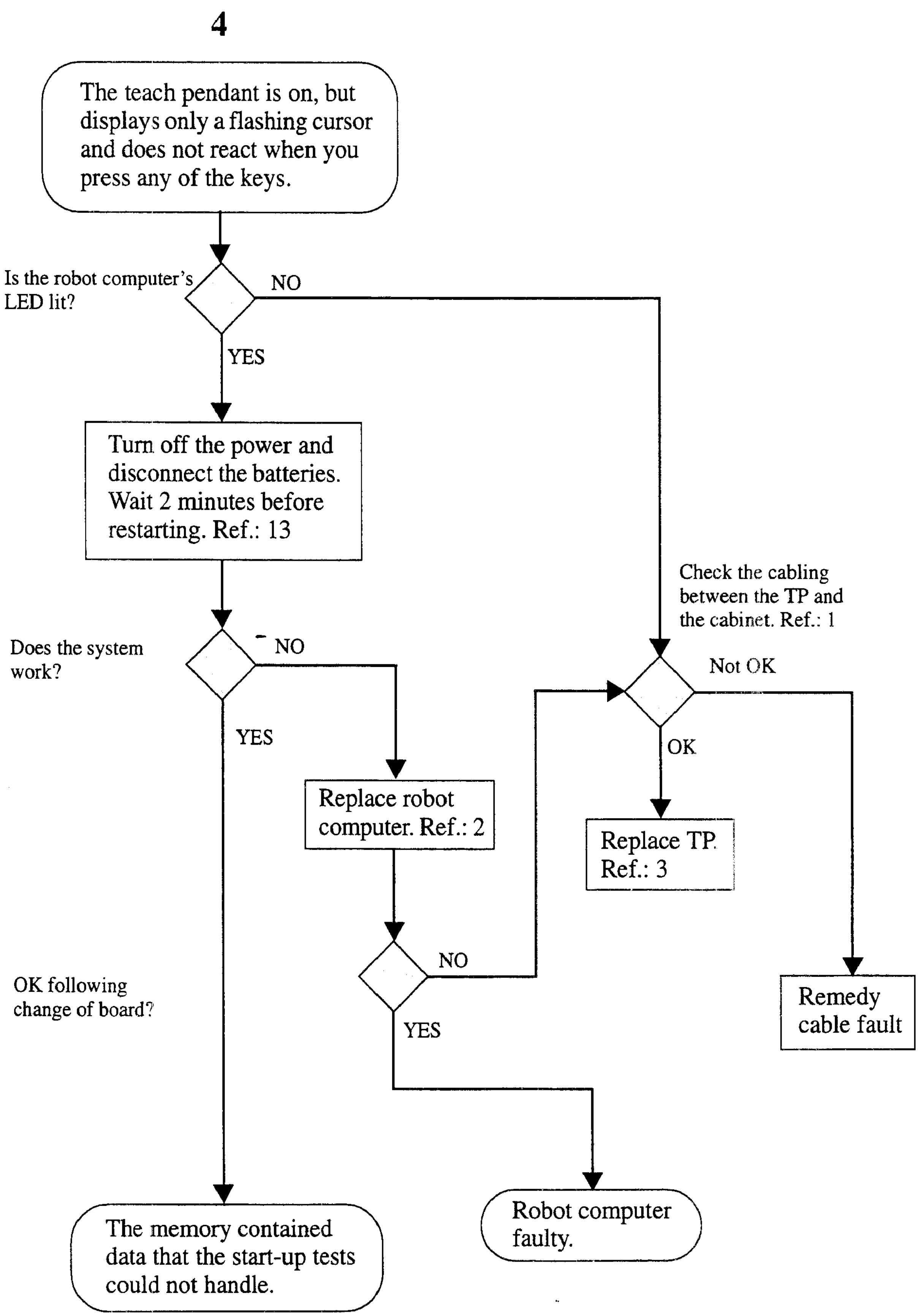

If none of the measures recommended in this diagram solve the problem, contact a specialist.

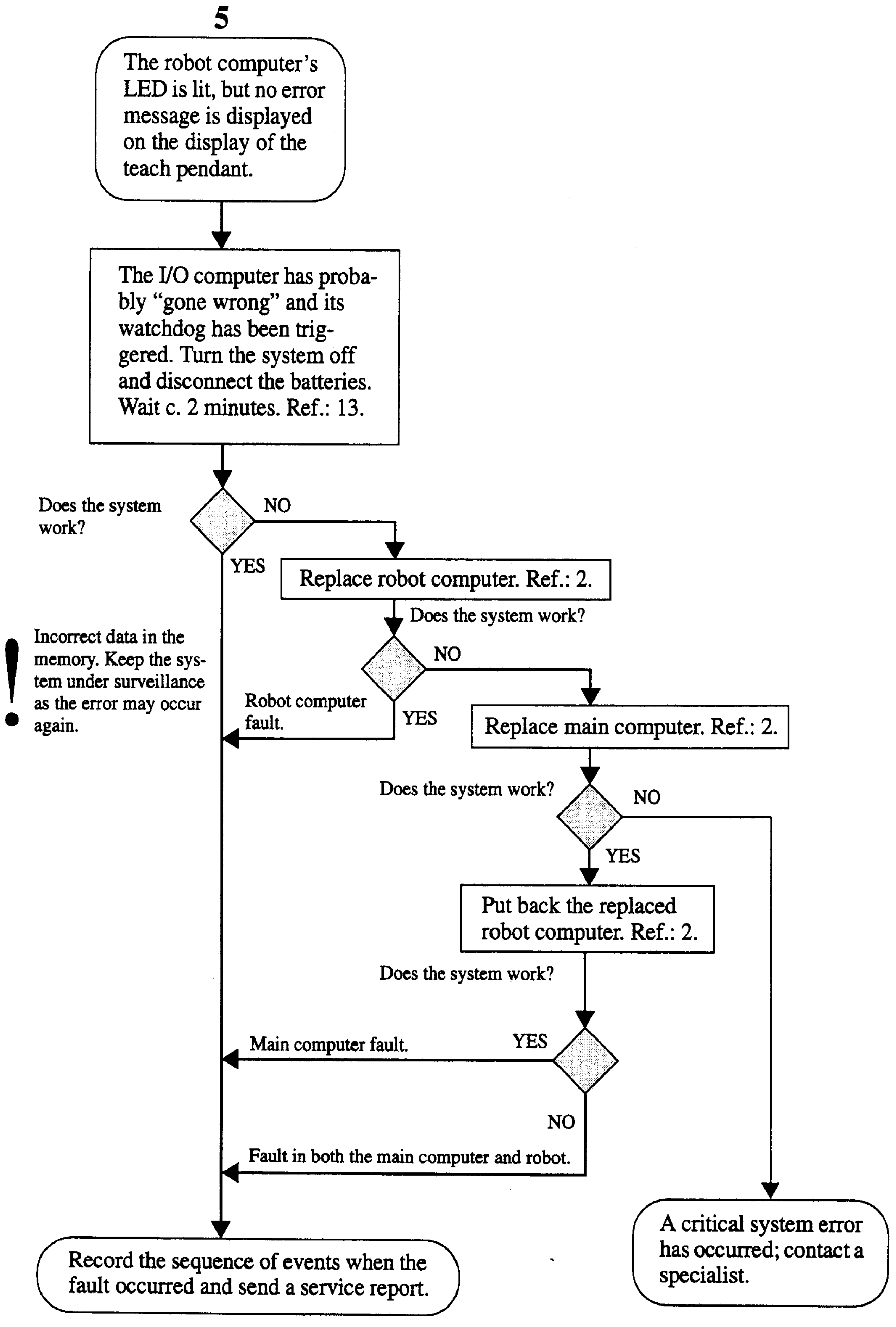

If none of the measures recommended in this diagram solve the problem, contact a specialist.

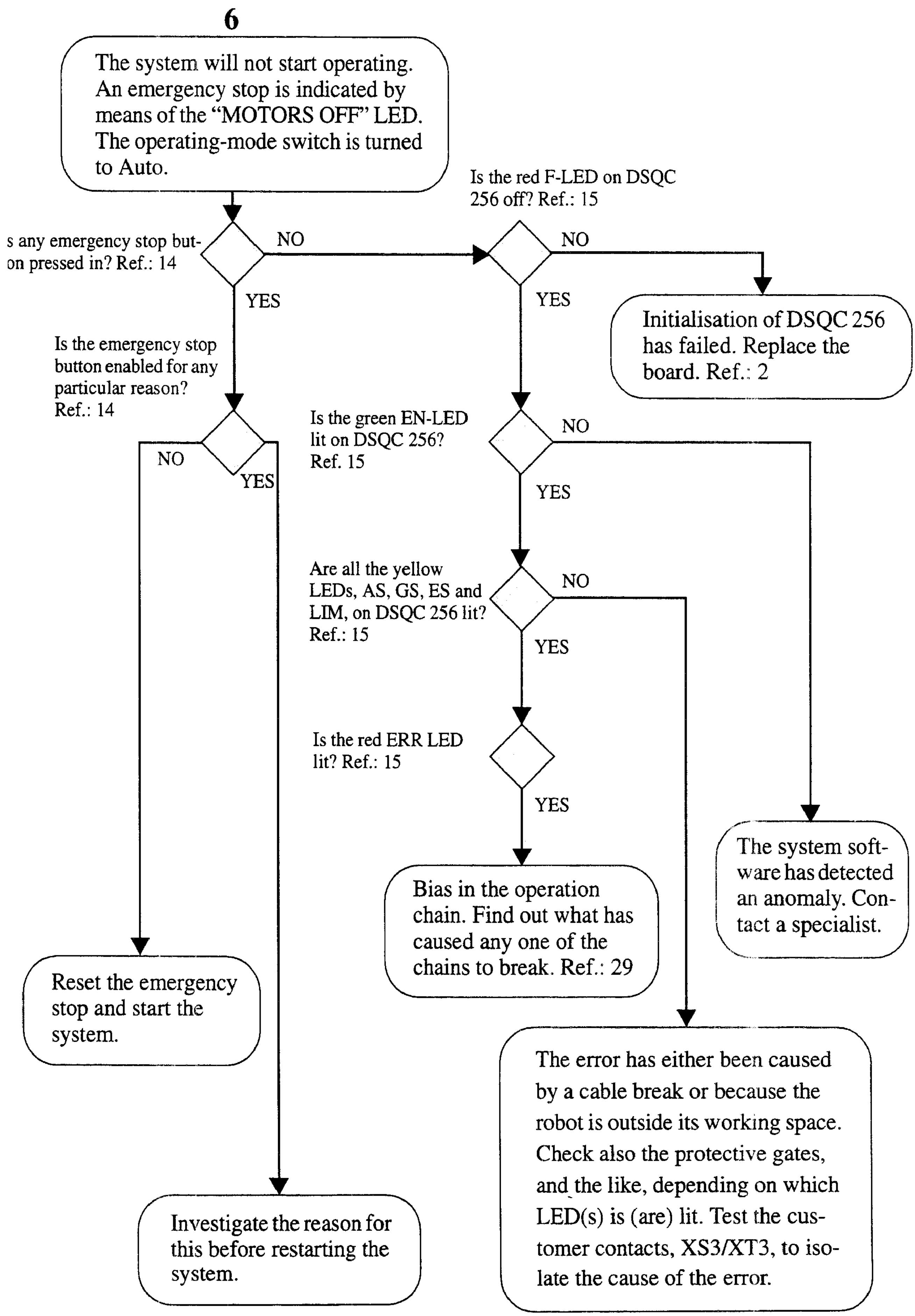

If none of the measures recommended in this diagram solve the problem, contact a specialist.

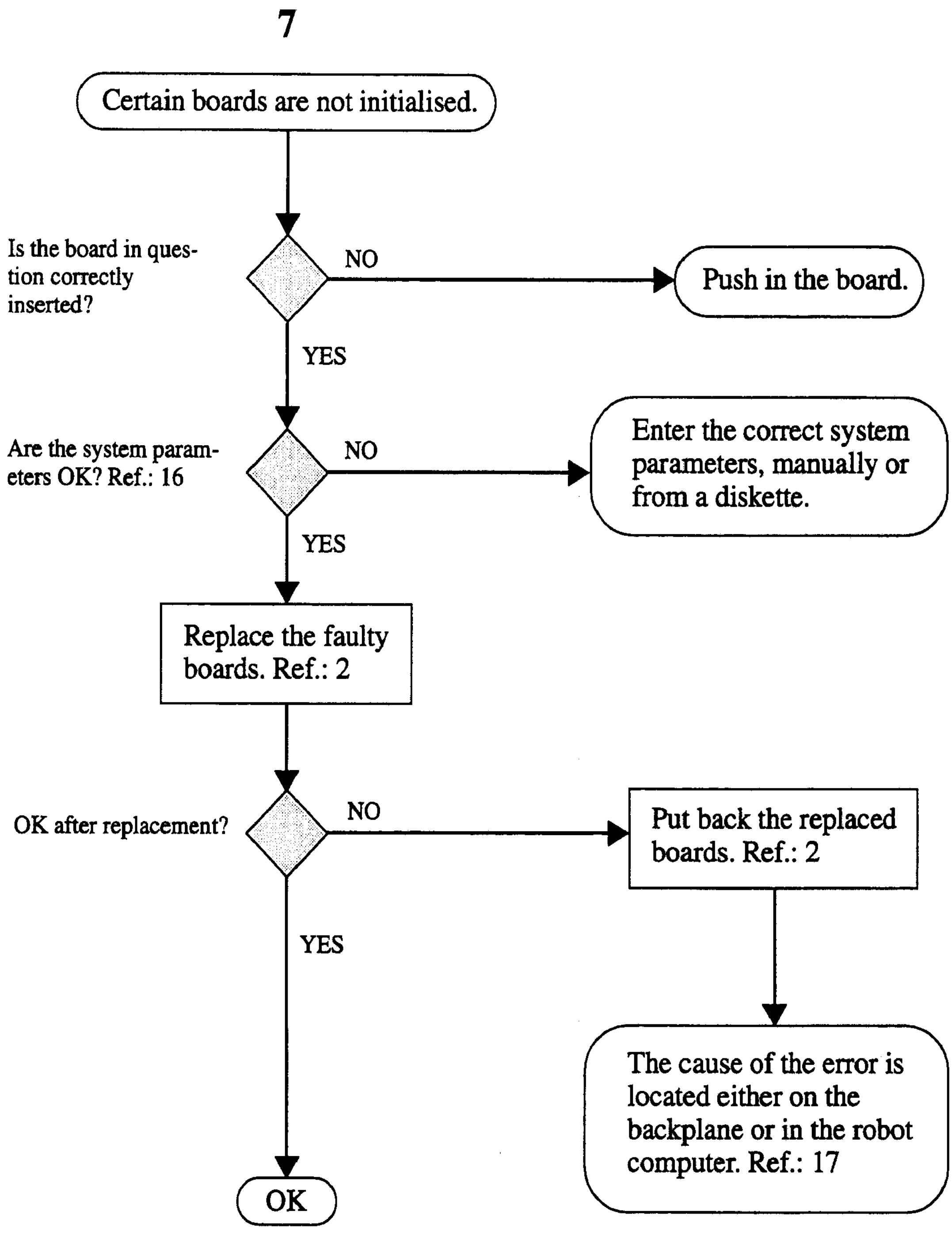

If none of the measures recommended in this diagram solve the problem, contact a specialist.

8

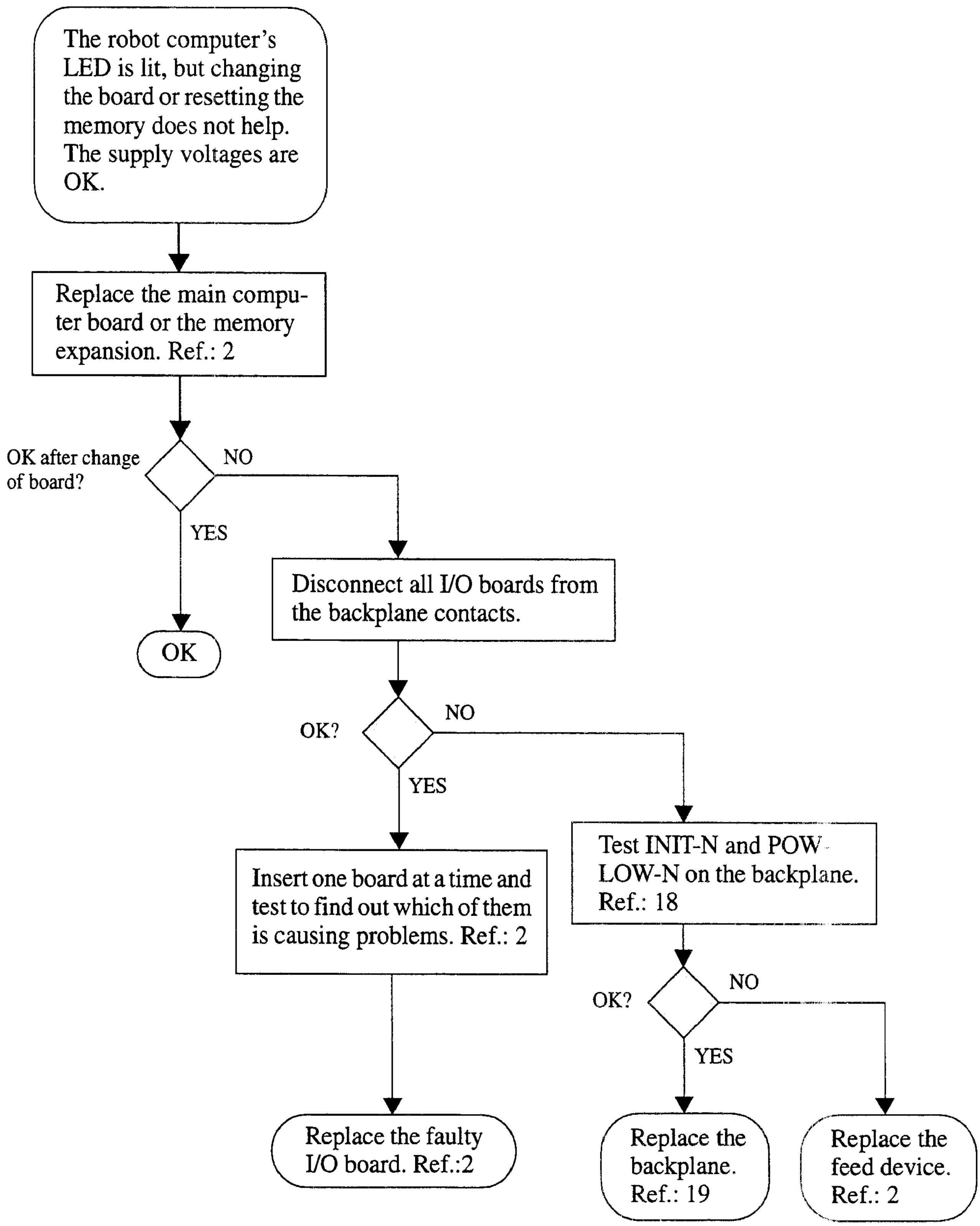

If none of the measures recommended in this diagram solve the problem, contact a specialist.

9

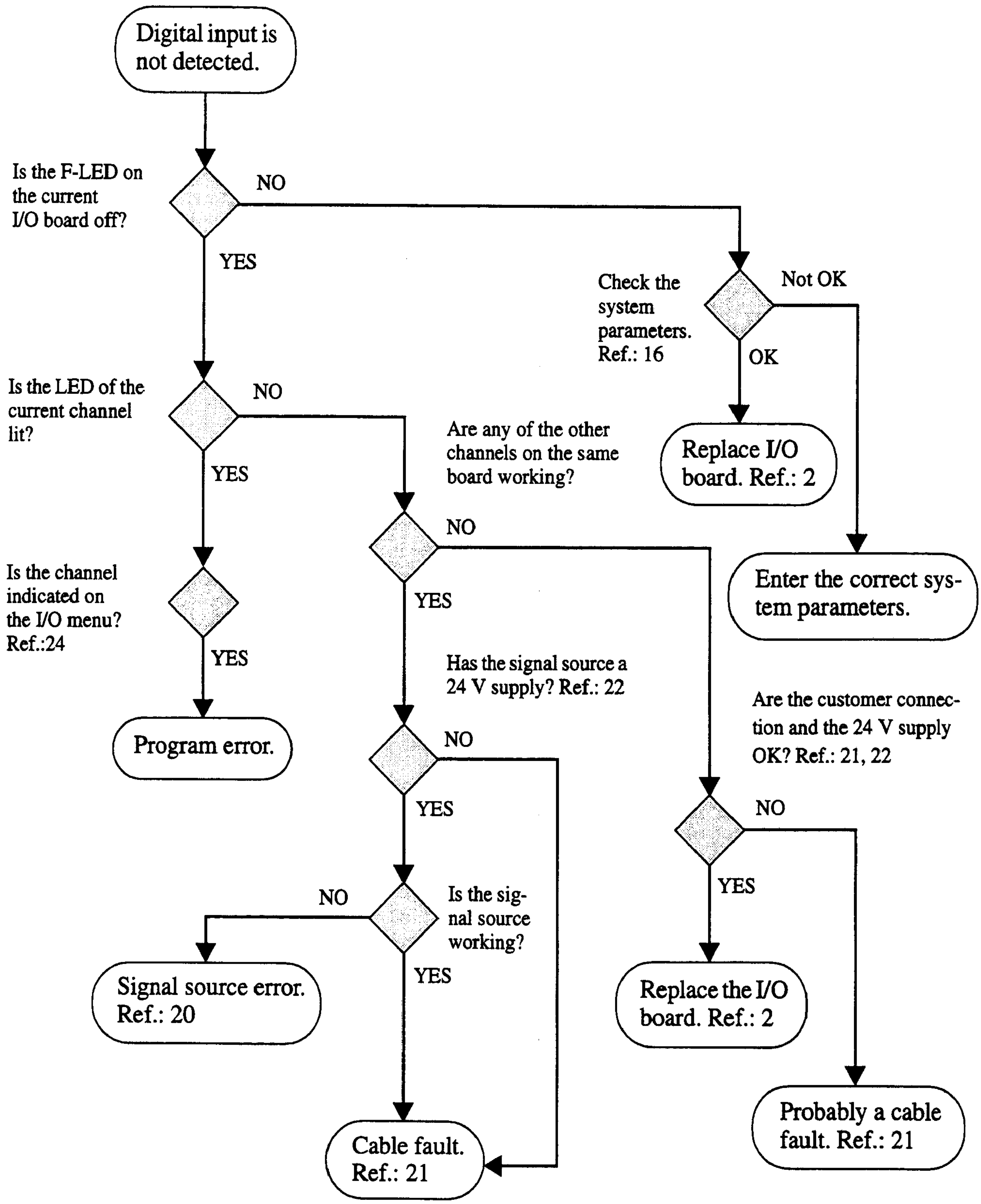

If none of the measures recommended in this diagram solve the problem, contact a specialist.

10

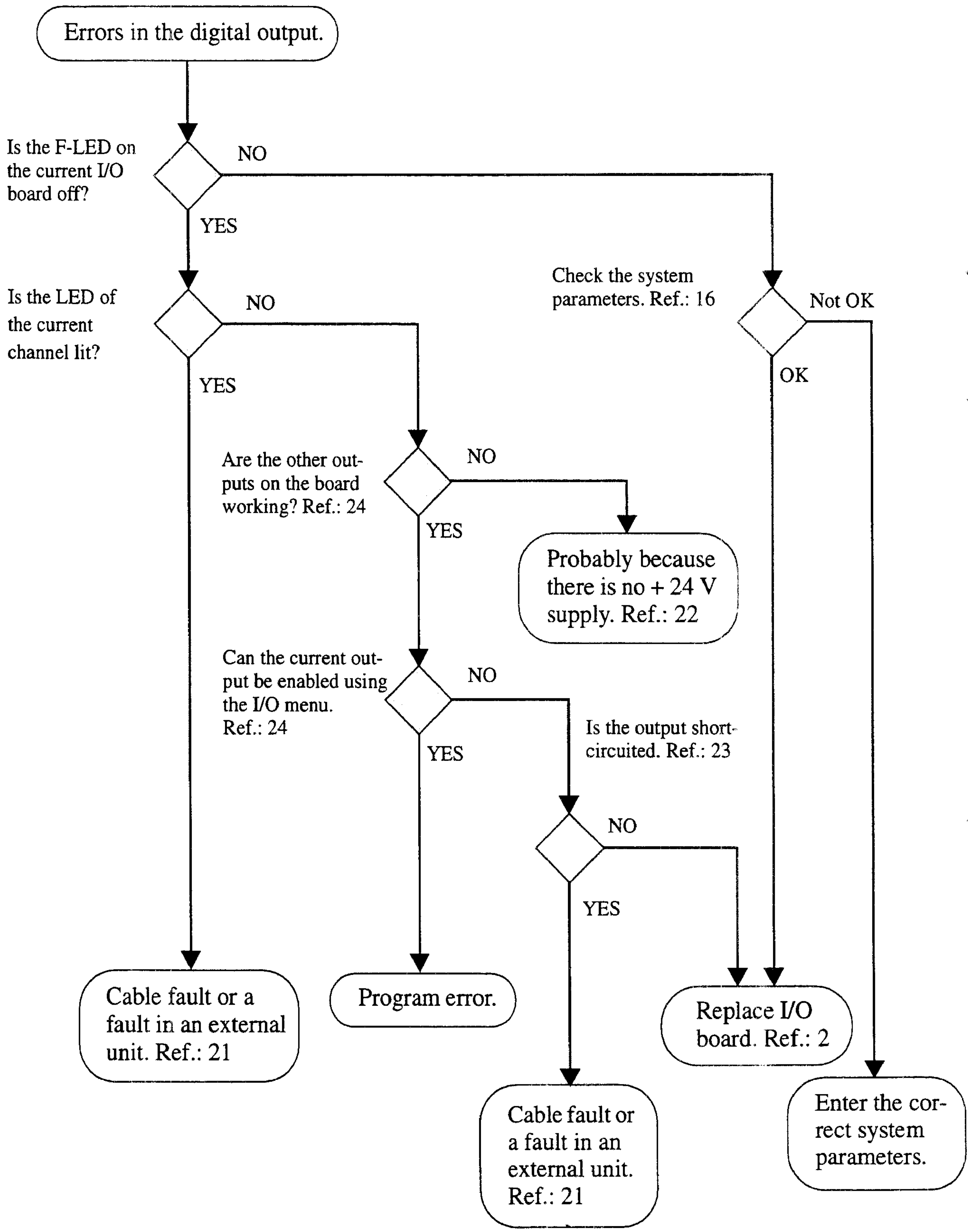

If none of the measures recommended in this diagram solve the problem, contact a specialist.

11

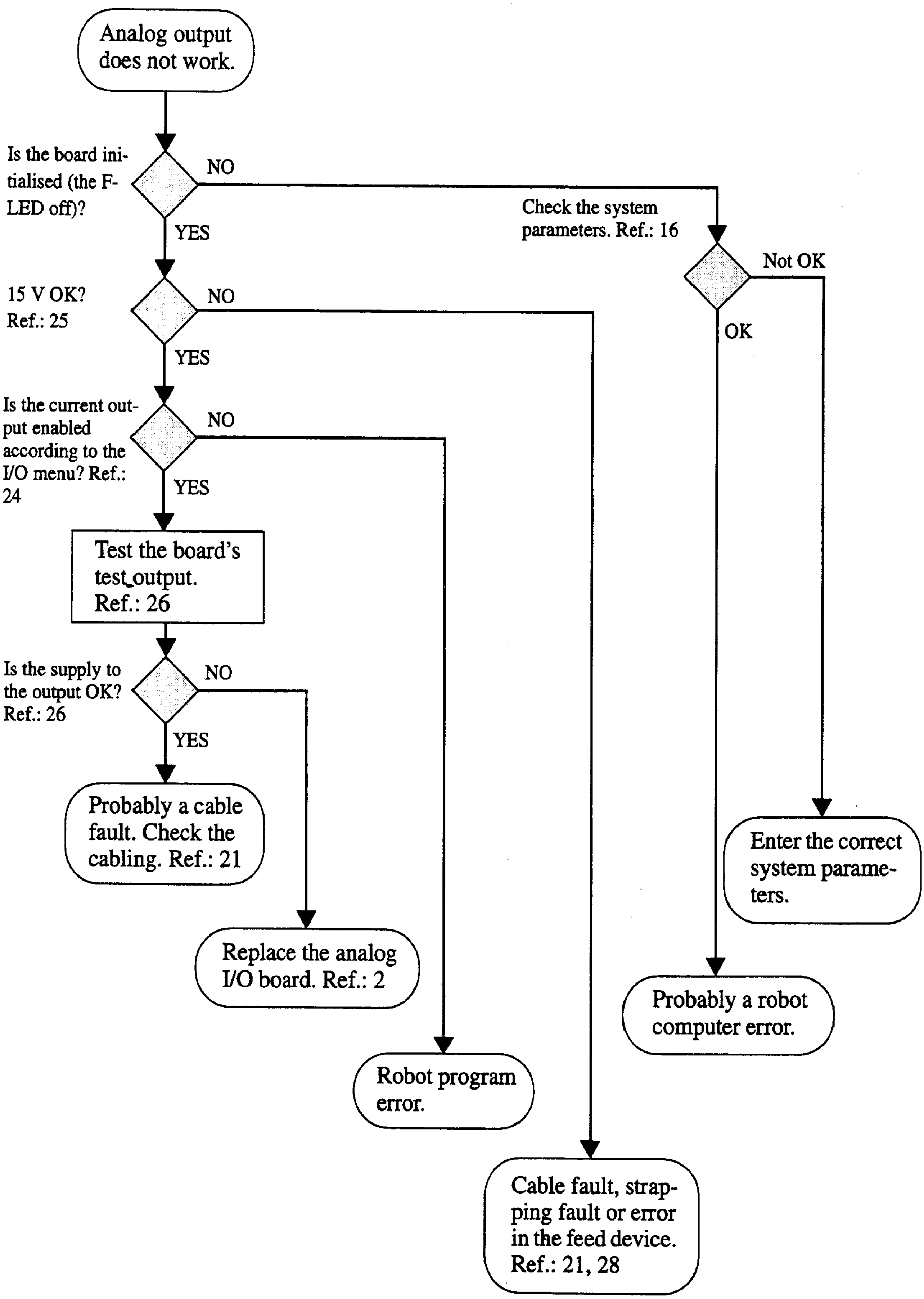

If none of the measures recommended in this diagram solve the problem, contact a specialist.

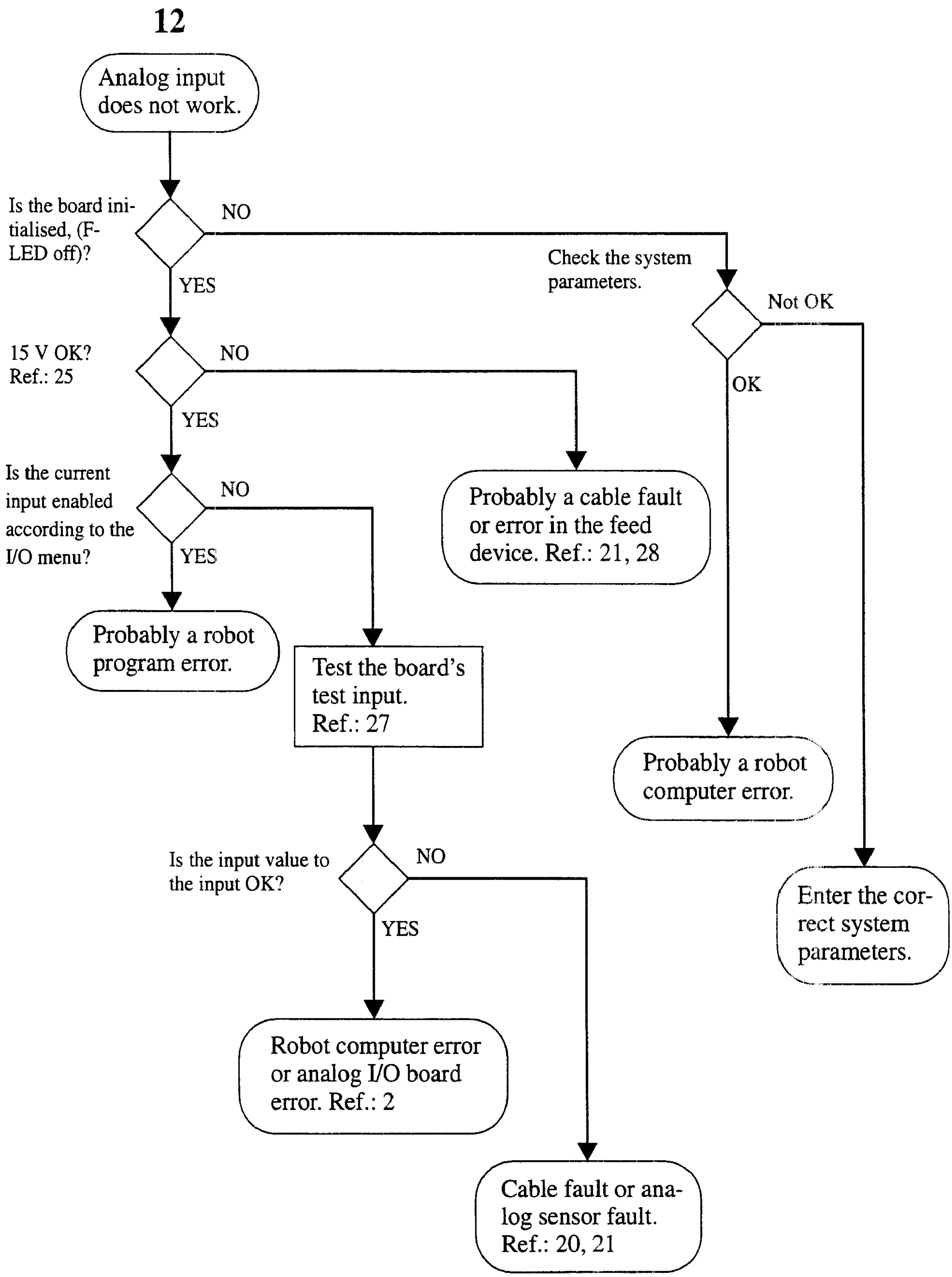

If none of the measures recommended in this diagram solve the problem, contact a specialist.

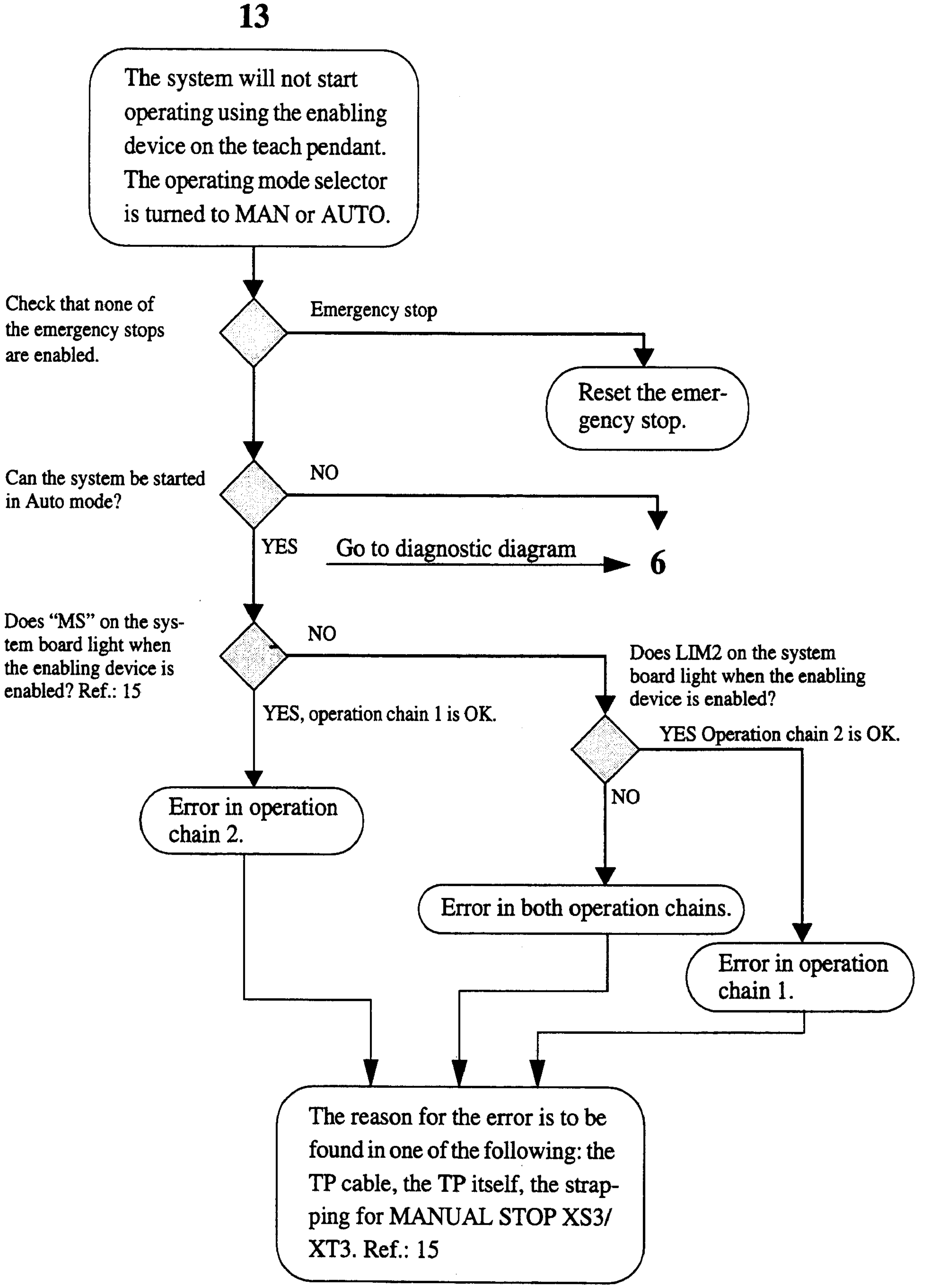

If none of the measures recommended in this diagram solve the problem, contact a specialist.

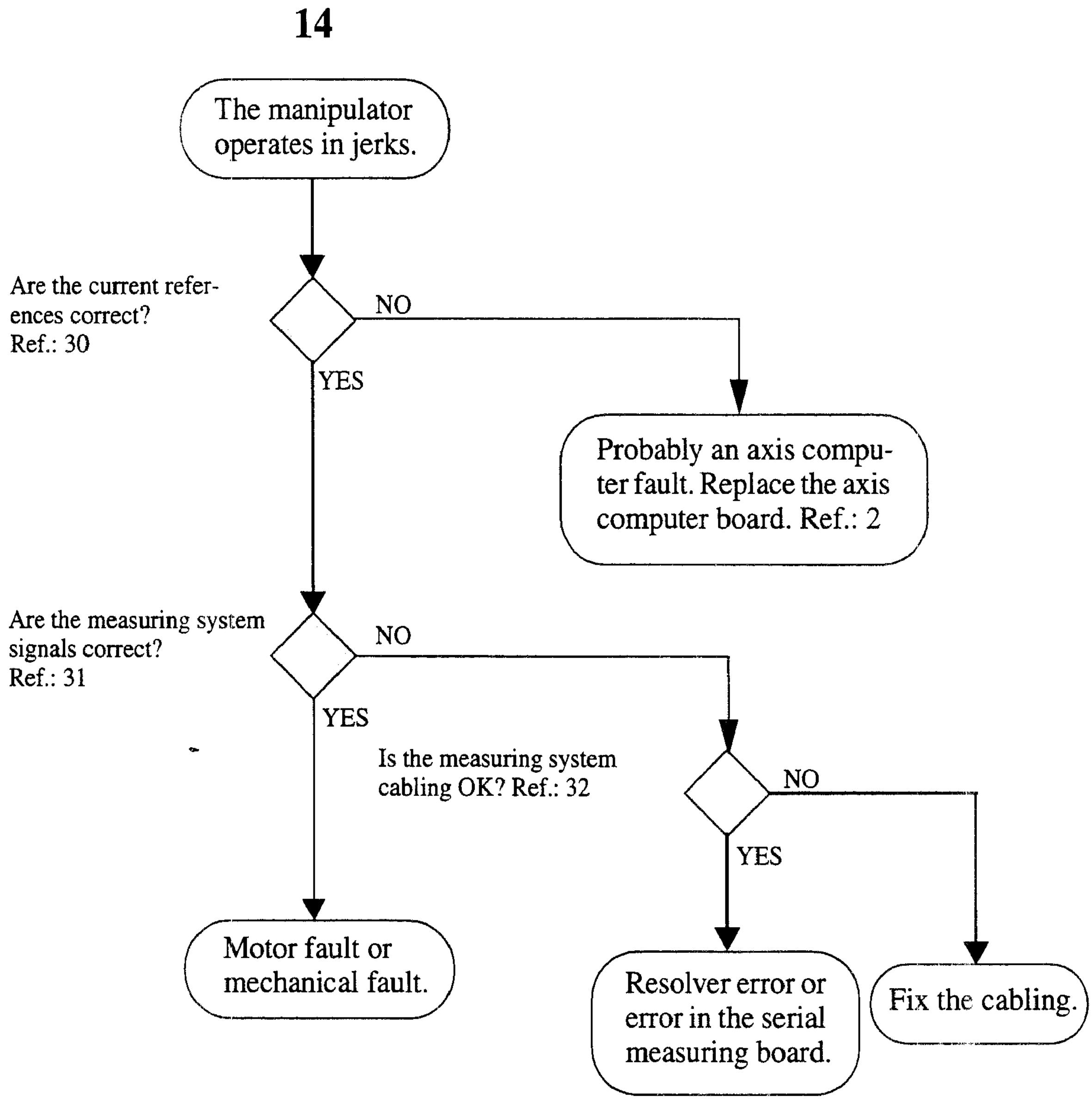

If none of the measures recommended in this diagram solve the problem, contact a specialist.

10.3 Diagnostic diagram references

1. Check the teach pendant cabling

Turn off the power supply to the system and test the ohmic resistance between the measuring points, X32 TEACH PENDANT (on the backplane) and the XS20 connector (the connection for the teach pendant). See the system circuit diagrams for more detailed information. If the tested connections are correct, the teach pendant cable must be faulty.

2. Replace a unit/board in the rack

Electronic units must not be handled unless the discharging wrist attachment is attached.

Turn off the power supply to the system, take the unit/board out of the rack and put the unit/board directly into an antistatic bag. Take the new unit/board directly out of its antistatic bag.

3. Replace the teach pendant

The teach pendant and its cabling is considered one unit. Thus, even if there is a cable fault, the complete unit must be replaced. The connection is located on the front of the cabinet, contact XS20.

4. Replace the rectifier/drive unit

Switch off the mains switch. Loosen the front panel of the drive unit rack and change the rectifier unit as in ref.:2. After it has been replaced, screw back the front panel.

5. Troubleshoot the I/O cabling

Use the system circuit diagram when troubleshooting the I/O cabling.

6. Troubleshoot the operation chain

Use the system circuit diagram when troubleshooting the operation chain. Check the LEDs on the front of the system board too.
See also Troubleshooting Tools - Measuring Points in Section 6.

7. Not used

8. Check the batteries

The battery voltage can be tested using the measuring points X 81 and X 82 on the backplane. The voltage of the battery must not be less than 2.7 V.
See Troubleshooting Tools - Measuring Points in Section 6.

9. Replace batteries

The batteries are connected via a connector to the backplane and are mounted with a cable bracket below the rack to the right.

Old batteries should never be disposed of along with general waste; they should be returned for recycling.

When changing batteries, switch the system on to save the contents of the memory.

10. Battery switch fault

The battery switch, which automatically connects the battery with the highest terminal voltage, is located on the robot computer board. If one of the batteries is discharged and the other is fully charged, and the system loses memory when the power is switched off, there is something wrong with the battery switch (subject to both batteries being connected of course).

In the event of a fault, the robot computer board must be replaced; the batteries can, in this case, be switched on manually during that time.

11. Input supply is short-circuited

Danger! High voltage!

With the main cable disconnected from the wall socket, test the ohmic resistance between the phases and earth and, where appropriate, neutral. It is not only the transformer that can be short-circuited, this can also happen to the input filter. Faulty connections can also cause short circuits.

12. Connections and transformers

Danger! High voltage!

Use the system circuit diagram when troubleshooting.

13. Empty the memory

It may sometimes be necessary to empty all memory in the system if the system will not start. There are two ways of doing this:

- Switch off the system.
- Disconnect the battery connections, or take out the robot computer, the main computer boards and, where appropriate, the expansion memory. Wait a few minutes until the memory circuits have discharged themselves before resetting. Note that the system requires boot diskettes to restart.

14. Emergency stops

Remember that an emergency stop may be brought about by someone moving inside the hazardous area of the work cell. Always check therefore what caused the emergency stop before resetting it.

All emergency stops are included in the operation chain. When troubleshooting, use the system circuit diagram in this manual. Check the LEDs on the front of the system board too or on the teach pendant, see section 2.6.

15. Operation chain

The operation chain consists of two independent circuits, which must be closed in order to be able to operate the system. Circuit 1 is supplied with 24 V and circuit 2 is connected to 0 V. The status of the operation chain can be read via the LEDs on the front of the system board (DSQC 256) or on the teach pendant, see section 2.6.

Two errors can occur: (a) an intentional (emergency stop) or an unintentional break in the operation chain (caused by an open protective gate, the robot reaching the limit position, etc.); (b) bias in the operation chain, i.e. one of the circuits is closed whilst the other is open.

It is very easy to find the reason for errors in circuit 1 using the LEDs; circuit 2, on the other hand, has only one LED (LIM 2), which makes problems in this circuit more difficult to solve, and requires more comprehensive diagnostics. Using the appropriate system circuit diagram, however, troubleshooting circuit 2 is relatively simple.

See also Troubleshooting Tools - Measuring Points in Section 6 of this manual and Specifications & Tips - System Boards in Chapter 2 of this section.

16. System parameters

The system parameters, which define I/O ports, among other things, can be read and changed using the teach pendant.

17. Backplane/robot computer

In cases where one or more I/O board(s) is (are) not initialised and there is nothing wrong with the boards, the robot computer or the backplane is probably faulty. Start off by replacing the robot computer since this is easiest to replace. If that does not work, the backplane must be replaced.

18. INIT-N & POWLOW-N

INIT-N and POWLOW-N are reset signals sent to the robot computer. If either of these signals is absent when the power is switched on, the robot computer will not start. When the power is switched on, the system is maintained in reset mode by POWLOW-N until the supply voltages have stabilised. When the power is switched off, POWLOW-N is activated prior to the INIT-N signal in order to give the computers enough time to save data before they stop. The signals can be tested on the backplane using the feed device.

19. Replace backplane

The backplane is fixed to the rear of the rack. When replacing it, all boards, batteries and cabling must be disconnected.

20. Signal sensor error

In the event of an external unit being faulty, follow the appropriate manufacturer's instructions.

21. I/O cable faults

I/O cable faults often occur outside the cabinet. Start from the I/O connections on the wall of the cabinet and test the ohmic resistance or the voltage sent to the sensor/ receiver in the work cell.

22. External/internal 24 V

The voltage supply to digital I/O must not be less than 19 V nor more than 35 V.

23. Short-circuited digital output

The digital outputs are protected against short-circuiting and a short-circuited, enabled output is indicated when its LED does not light. An enabled output must be ≥ 19 V.

24. I/O menu

The I/O window can be accessed using the teach pendant and can be used to read and enable I/O signals. Its operation is self-instructional. See also the User's Guide.

25. External/internal 15 V

The external voltage supply to analog I/O signals must be ± 15 V ± 5%.

26. Analog output

The analog output channels 1, 2 and 3, have a voltage variation of ±10 V. Channel 4 is a current output which can drive or sink up to 20 mA. Bad variation in output signals, in addition to being caused by board errors, can also be caused by faulty lines, bad ±15 V or errors in the signal receiver. See Specifications & Tips - Analog I/O in Chapter 2 for tests.

27. Analog input

The four analog inputs accept signals with a variation of ±10 V. Weak input signals, in addition to being caused by board errors, can also be caused by faulty lines, bad ±15 V or an incorrect signal sensor. See Specifications & Tips - Analog I/O in Chapter 2 for tests.

28. Feed device

The feed device has one red LED with the following features:

Fixed beam	Means that either the +5 V or -15 V signals are short-circuited – individually or several simultaneously.
Flashing LED	Means that +24 V is short-circuited.
Unlit LED	Means that all voltages comply with specifications (or that there is no 230 V AC).

29. Bias in the operation chain

If KM1 has dropped, check operation chain 1; if KM2 has dropped, check operation chain 2.

30. Current references

Using an oscilloscope, test the X4 measuring points. The signals should correspond to the diagram in Section 9, Chapter 4.4. Watch out for interference or strange levels.

31. Measuring system

Using an oscilloscope, test the X31 measuring point. Make sure that both of the differential channels are working. Check for interference. If either of the channels is missing, a cable break has probably occurred; if this is not the case, a driver has broken down. The drivers are located on the serial measuring board and in the robot computer.

32. Measuring system cabling

Check that the cabling is whole – both the cabling in the manipulator and the measuring cabling between the manipulator and the cabinet.

CONTENTS

Page

CONTENTS

Page

Error Messages

1 Indicating Errors

Errors detected by the system's diagnostic software are shown in an "error menu" on the teach pendant, such as the one in the diagram below.

Error code number →

Error category ←

Reason for error →

Message log →

```
Error 101:IOC lost interrupts  Hardware

Reason............................
Interrupts on level 3 lost..........
..................................
..................................

Error 101: IOC lost interrupts 09:00:00
YYXXXX                       time stamp
YYXXXX                       time stamp

Check                                OK
```

Error code number
A number that is unique for each error.

Error Category
Connects the error to the category of that type of error, e.g. Hardware.

Reason
Describes the reason for the error in plain language. See the next section of this manual for more information on hardware errors.

Message log
The 50 most recent errors are displayed in the message log. The error shown on the first line is the last error to be displayed in the window. The log indicates the error code number, a short explanation of the error and the time at which the error was registered. If any of the messages in the log are marked, the complete error message is displayed in the window. It is possible to scroll up through the log to view previous errors.

The ***Check*** key is used to get help on how to handle a specific error.
OK is used to close the error-message window.

1.1 Type of error messages

There are three different levels of error messages, namely:

- Error
- Warning
- State change.

The error messages are also divided into groups depending on the functions they relate to:

1	Operational:	Robot operations
2	System:	Internal software events
3	Hardware:	Hardware events
4	Program:	RAPID program execution
5	Motion:	Motion-related events
6	Operator:	Handling the teach pendant

2 Message Syntax

The English version

A message is described according to:

# - line 1	a header for the message log, Maximum 25 characters
# - line 2-x	The reason for message. Maximum 200 char on 5 lines
# - line x+1	\t\n to separate reason from check list
# - line x+2-y	The check list for message. Maximum 200 char on 5 lines

#

Text resource number = TX_RES_HW_ELOG

23::

0 :

3 Operational error messages

10002: Program reset

The task %s has
been rewind to its start point.

10005: Program stopped

The task %s has
stopped. The reason is that
%s

an external or internal stop after current
instruction has occurred.

the task has reached an exit instruction.

the task is ready.

the task is ready with this step.

the task has reached a break instruction.

an external or internal stop has occurred.

an error has occurred.

Cannot execute backward past beginning
of instruction list.

Cannot execute backward past this
instruction.

10007: Program started

The task%s has
start to execute.
%s

The originator is the program window.
The originator is the production window.
The originator is unknown.
The originator is an extern client.

10008: Program restarted

The task %s has
restart to execute.
%s

The originator is the program window.
The originator is the production window.
The originator is unknown.
The originator is an extern client.

10009: Work memory full

No memory left for new RAPID
instructions or data.
The task is %s
Check:
Save the program and then
restart.

10010: Motors off state

10011: Motors on state

10012: Guard stop state

Runchain opened by any safety guard
except the emergency stop.

10013: Emergency stop state

Runchain opened by emergency stop.
Em stop reset is required.
Use the motors off button.

10014: System failure state

Fatal non recoverable system error.
Warm start is required.

10015: Manual mode selected

10016: Automatic mode requested

10017: Automatic mode confirmed

10018: Manual mode FS requested

10019: Manual mode FS confirmed

10020: Execution error state

10021: Execution error reset

10022: Hold to run waiting

10023: Hold to run timeout

10030: All axes commutated

10031: All axes calibrated

10032: All rev counters updated

10033: All axes synchronized

10034: Axis not commutated

10035: Axis not calibrated

10036: Rev counter not updated

10037: Axis not synchronized

10040: Program loaded

The task %s has
loaded a program.
The free user space was %i bytes
before this operation and
%i bytes after.

10041: Program erased

The task %s has
erased a program.

10043: Restart failed

The task %s
cantrestart'

10044: Program Pointer updated

The task %s
could have changed the PP pos.

10045: System restarted

10046: System restarted in cold

mode

10047: Background task %s

refuse to start
%s

Task is empty
Wrong state
Cant set PC to them a in rout'
Cant set the execution mode'
The start order failed

10048: Background task did stop

The task %s stoped without reason
%s

10049: Protected area not finish

A power fail did occur in the
middle of a protected area for
the task %!%s
%s

The system is trying to selfheal
A pending error is removed from the queue
A pending exit is removed from the queue
This may result in an extra program cycle
The task will be restarted from the main routine

4 System error messages

20001: Enable chain open

20002: Emergency stop

20003: Limit stop

20006: Auto stop

20007: Manual stop

20008: General stop

20009: Run chain status fault

Two channel status conflict.
Check:
Check the leds on the system board when the red ERR led is lit to see where the fault is situated.

20010: Em stop state active

Em stop reset is required.
Use the motors off button.

20012: Sys failure state active

Fatal non recoverable system error.
Warm start is required.
Check:
Switch the mains switch off and on again if the soft restart command is ignored or not possible to reach.

20020: Run chain status timeout

Two channel status timeout.
Check:
The acknowledgement for a two channel run chain status change was not received within the expected time.
Check:
Check the leds on the system board when the red ERR led is lit to see where the fault is situated.
You might have to order Motors On again to get the ERR led lit.

20021: Key speed status fault

The operating mode selector signals and the speed signal are in conflict.

20022: Key status fault

The operating mode selector signals are in conflict (i.e. several modes or no mode indicated).

20024: Enable chain timeout

Two channel status timeout.
Check:
The acknowledgement for a two channel enable chain status change was not received within the expected time.

20025: Stop order timeout

The stop order was carried out as a forced guard stop when no acknowledgement was received within the expected time

20030: Axis not commutated

One or several internal drive unit axes are not commutated.

20031: Axis not calibrated

One or several absolute/relative measurement axes are not calibrated.

20032: Rev counter not updated

One or several absolute measurement axes are not synchronized.
Check:
Move the robot to the home position and update the revolution counters.

20033: Axis not synchronized

One or several relative measurement axes are not synchronized.
Check:
Order Motors On and synchronize all mechanical units in the list.

20040: Hold stop

20041: Motor 1-6 overload

One or several Motors are overheated. Make sure to let the Motors cool down before ordering Motors On again. This error will otherwise occur again after 15 sec in Motors On state.
Check:
View Safety in the IO window and wait until the signal OLM1 equals 0 before ordering Motors On again.

20042: Motor 7-x overload

One or several Motors are overheated. Make sure to let the Motors cool down before ordering Motors On again. This error will otherwise occur again after 15 sec in Motors On state.
Check:
View Safety in the IO window and wait until the signal OLM7 equals 0 before ordering Motors On again.

20050: Not allowed command

Not allowed in this operating mode.

20051: Not allowed command

Not allowed when client not in control of the resource (program/motion).

20052: Not allowed command

Not allowed in this cabinet state.

20053: Not allowed command

Not allowed in this manipulator state.

20054: Not allowed command

Not allowed when program is executing.

20060: Not allowed command

Not allowed in Auto mode.

20061: Not allowed command

Not allowed when changing to Auto mode.

20062: Not allowed command

Not allowed in Manual mode.

20063: Not allowed command

Not allowed in Manual full speed mode.

20064: Not allowed command

Not allowed when changing to Manual full speed mode.

20070: Not allowed command

Not allowed in Motors On state.

20071: Not allowed command

Not allowed while changing to
Motors On state.

20072: Not allowed command

Not allowed in Motors Off state.

20073: Not allowed command

Not allowed while changing to
Motors Off state.

20074: Not allowed command

Not allowed in Guard Stop state.

20075: Not allowed command

Not allowed in Emergency Stop state.
Check:
Em stop reset is required.
Use the motors off button.

20076: Not allowed command

Not allowed in System Failure state.
Check:
Fatal non recoverable system error.
Warm start is required.
Switch the mains switch off and on
again if the soft restart command is
ignored or not possible to reach.

20080: Not allowed command

Not allowed when axis is not commutated.

20081: Not allowed command

Not allowed when axis is not calibrated.

20082: Not allowed command

Not allowed when axis rev counter is not updated.

20083: Not allowed command

Not allowed when axis is not synchronized.

20100: Teachpendant in ctrl

A teachpendant application is in control of the requested resource (program/motion)

20101: Teachp (prg) in ctrl

The teachpendant programming window has focus and is in control of the program server.
Change to the production window and perform the command again.

20102: Teachp (joystick) in ctrl

The teachpendant joystick is in control of the motion server.
Release the joystick and perform the command again.

20111: Teachp (prg) in ctrl

The teachpendant programming window has focus and is in control of the program server.
Change to the production window and perform the command again.

20112: Program 1 in ctrl

The program server 1 is in control of the motion server. Stop the program and perform the command again.

20113: Program 2 in ctrl

The program server 2 is in control of the motion server. Stop the program and perform the command again.

20114: Program 3 in ctrl

The program server 3 is in control of the motion server. Stop the program and perform the command again.

20115: Program 4 in ctrl

The program server 4 is in control of the motion server. Stop the program and perform the command again.

20116: Program 5 in ctrl

The program server 5 is in control of the motion server. Stop the program and perform the command again.

20120: System IO in ctrl

20125: Client %s in ctrl

Specified client is in control of the requested resource (program/motion)

20130: Out of memory in cfg

20131: Unable to read file

20132: Parameters not saved

Parameters cannot be saved.
Probably, because disk is write
protected or no space available.
Check:
Check if disk is write-protected or
if space on disk is enough.

20133: Cannot modify instance

20134: Wrong version

DescriptionReason:
The cfg domain version is wrong in file %s
The software is made for
version %s
Check:
Change the version of the cfg domain.

20140: Motors On rejected.

Motors On via System IO
not allowed.

20141: Motors Off rejected.

Motors Off via System IO
not allowed.

20142: Start rejected.

Start/restart of program via System
IO not allowed.

20143: Start main rejected.

Start of main program via System IO
not allowed.

20144: Stop rejected.

Stop of program via System IO
not allowed.

20145: Stop cycle rejected.

Stop of program cycle via System IO
not allowed.

20146: Man interrupt rejected.

Manual interrupt of program via
System IO not allowed.

20147: Load and start rejected.

Load and start of program via
System IO not allowed.

20148: Confirm rejected.

Emergency Stop Reset Confirm via
System IO not allowed.

20149: Error reset rejected.

Program execution error reset via
System IO not allowed.

20150: Syncronization rejected.

Syncronization of mechanical unit
via System IO not allowed.

20151: Faulty signal name.

Signal name not possible to
subscribe to for Sysio.
The Signal name might not be in
the cfg-file for Sysio.

20152: Too many restrictions.

For an action (signal) in Sysio, no restrictions are set. The total number of restrictions (signals) for an action in the cfg-file for Sysio are too high.

20153: Mot. On, Start rejected.

Motors On, Start/restart of program via System IO not allowed.

20154: Stop instr. rejected.

Stop of program instruction via System IO not allowed.

20160: Not in configuration

The system module %!%s in task %s has no corresponding specification in the configuration for "Task modules"
Check:
View "Task modules" in the "System Parameter" menu and add an item for this system module

20161: Path not find

The system module %!%s in task %s has a corresponding specification in the configuration for "Task modules" that point out a non existing file path
Check:
View "Task modules" in the "System Parameter" menu and change the path in the item for this system module

20162: Write error

A write error occur when the system try to save the system module %!%s in task %s. Or the file system was full
Check:
View "Task modules" in the "System Parameter" menu and change the path in the item for this system module

20163: Reconfig failed

some user routine(s) changed but not saved
Check:
Save it and try another system start

20164: Reconfig failed

There are still some unsaved system module
Check:
Read error descriptions in earlier messages
Try another system start

5 Hardware error messages

These are direct hardware errors that can occur during diagnostics of the system or during runtime.

The harware errors have the following error codes : 3xxxx

xxxx = 1 to 9999

31108: Error in serial channe

Error in serial channel %.f
Check:
1. Check communication parameters
2. Replace robot computer board

31114: Bus error

Bus error when accessing LED on main computer
Check:
1. Replace main computer board
2. Replace robot computer board

31115: Error in serial channel 1

Received data not equal to transmitted data
Check:
1. Check communication parameters
2. Replace robot computer board

31116: Overflow serial channel 1

Check:
1. Check communication parameters
2. Replace robot computer board

31117: Parity error channel 1

Check:
1. Check communication parameters
2. Replace robot computer board

31118: Framing error channel 1

Check:
1. Check communication parameters
2. Replace robot computer board

31119: Noise error channel 1

Check:
1. Check communication parameters
2. Replace robot computer board

31125: Error in serial channel 7

Received data not equal to transmitted data
Check:
1. Check communication parameters
2. Replace robot computer board

31126: Overflow serial channel 7

Check:
1. Check communication parameters
2. Replace robot computer board

31127: Parity error channel 7

Check:
1. Check communication parameters
2. Replace robot computer board

31128: Framing error channel 7

Check:
1. Check communication parameters
2. Replace robot computer board

31129: Noise error channel 7

Check:
1. Check communication parameters
2. Replace robot computer board

31130: Port error

Check:
Replace robot computer board

31203: Floppy Disk Error

Bad floppy disk or not formatted
Check:
1. Repeat attempt
2. Change disk

31206: Floppy Disk Error

Bad floppy disk or internal error
Check:
1. Repeat attempt
2. Change disk
3. Restart the system

31210: Floppy Disk Error

Invalid format
Check:
1. Change disk

31211: Floppy Disk Error

Data transfer error to/from floppy
Check:
1. Repeat attempt
2. Change disk
3. Restart the system

31214: Floppy Disk Error

Data transfer was interrupted
Check:
1. Repeat attempt
2. Restart the system

31215: Floppy Disk Error

Internal command invalid
Check:
1. Repeat attempt
2. Restart the system

31216: Floppy Disk Error

Floppy disk was moved during tranfer
Check:
1. Repeat attempt
2. Restart the system

31217: Floppy Disk Error

Bad floppy disk or floppy device
Check:
1. Repeat attempt
2. Change Disk
3. Restart the system

31219: Floppy Disk Error

Floppy device not ready
Check:
1. Repeat attempt
2. Restart the system

31220: Floppy Disk Error

Bad floppy disk or internal error
Check:
1. Repeat attempt
2. Change Disk
3. Restart the system

31221: Floppy Disk Error

Data error
Check:
1. Repeat attempt
2. Change Disk
3. Restart the system

31222: Floppy Disk Error

Internal error - Overrun
Check:
1. Repeat attempt
2. Restart the system

31223: Floppy Disk Error

Bad floppy or internal error
Check:
1. Repeat attempt
2. Change Disk
3. Restart the system

31224: Floppy Disk Error

Floppy write protected
Check:
1. Remove write protection

31225: Floppy Disk Error

Bad Floppy - Address mark missing
Check:
1. Change Disk

31226: Floppy Disk Error

Bad data on floppy
Check:
1. Change Disk

31227: Floppy Disk Error

Bad floppy - Missing cylinder
Check:
1. Change Disk

31228: Floppy Disk Error

Bad floppy - Bad cylinder
Check:
1. Change Disk

31229: Floppy Disk Error

Bad floppy - Bad address mark in data
Check:
1. Change Disk

31402: DMA error

DMA transfer error in ROBOT COMPUTER
Check:
Replace robot computer board

31403: DMA error

DMA transfer error in ROBOT COMPUTER
Check:
Replace robot computer board

31404: DMA error

DMA transfer error in ROBOT COMPUTER
Check:
Replace robot computer board

31405: Missing axis program

Prom not including axis program
Check:
Replace proms on robot computer board

31406: Memory error

Memory error in axis computer
Check:
Replace robot computer board

31407: Axis computer error

Check:
Check if signal DRVFLT-N is connected
Replace robot computer board

31408: Axis computer error

Check:
Replace robot computer board

31409: Robot computer error

Check:
Replace robot computer board

31410: Axis computer error

Check:
Replace robot computer board

31411: Axis computer error

Check:
Replace robot computer board

31414: Main computer error

Check:
1. Replace main computer board
2. Replace robot computer board

31415: Main computer error

Check:
Replace main computer board

31416: Path computer error

Check:
Replace path computer board

31417: Path computer error

Check:
Replace path computer board

31418: DMA transfer error

DMA transfer error in ROBOT COMPUTER
Check:
Replace robot computer board

31419: DMA transfer error

DMA transfer error in ROBOT COMPUTER
Check:
Replace robot computer board

31420: DMA transfer error

DMA transfer error in ROBOT COMPUTER
Check:
Replace robot computer board

31421: Error in IO COMPUTER

Check:
Replace robot computer board

31601: Error HI PROM checksum:

Checksum %.f should have been: %.f
Check:
Replace proms or robot computer

31602: Error LOW PROM checksum:

Checksum %.f should have been: %.f
Check:
Replace proms or robot computer

31603: Error PROM checksum:

Checksum %.f should have been: %.f
Check:
Replace proms or robot computer

31605: Memory error IO-computer

Check:
Replace robot computer board

31606: Memory error IO-computer

Check:
Replace robot computer board

31607: Memory error IO-computer

Check:
Replace robot computer board

31608: Checksum Error IO-comp.

Check:
Replace robot computer board

31701: Serial channel overrun

Serial channel %.f overrun error
Check:
1. Check communication parameters
2. Replace robot computer board

31702: Serial channel 2 overrun error

Check:
1. Check communication parameters
2. Replace robot computer board

31703: Serial channel 3 overrun error

Check:
1. Check communication parameters
2. Replace robot computer board

31704: Serial channel 5 overrun error

Check:
1. Check communication parameters
2. Replace robot computer board

31705: Serial channel 8 overrun error

Check:
1. Check communication parameters
2. Replace robot computer board

31706: Channel parity error

Serial channel %.f parity error
Check:
1. Check communication parameters
2. Replace robot computer board

31707: Channel 2 parity error

Serial channel 2 parity error
Check:
1. Check communication parameters
2. Replace robot computer board

31708: Channel 3 parity error

Serial channel 3 parity error
Check:
1. Check communication parameters
2. Replace robot computer board

31709: Channel 5 parity error

Serial channel 5 parity error
Check:
1. Check communication parameters
2. Replace robot computer board

31710: Channel 8 parity error

Serial channel 8 parity error
Check:
1. Check communication parameters
2. Replace robot computer board

31711: Framing error

Serial channel %.f framing error
Check:
1. Check communication parameters
2. Replace robot computer board

31712: Channel 2 framing error

Serial channel 2 framing error
Check:
1. Check communication parameters
2. Replace robot computer board

31713: Channel 3 framing error

Serial channel 3 framing error
Check:
1. Check communication parameters
2. Replace robot computer board

31714: Channel 5 framing error

Serial channel 5 framing error
Check:
1. Check communication parameters
2. Replace robot computer board

31715: Channel 8 framing error

Serial channel 8 framing error
Check:
1. Check communication parameters
2. Replace robot computer board

31716: Channel error

Serial channel %.f error
Check:
1. Check communication parameters
2. Replace robot computer board

31730: Timer %.f error

Check:
2. Replace robot computer board

31733: Serial channel %.f error

Received data not equal transmitted data
Check:
1. Check communication parameters
2. Replace robot computer board

31734: Serial channel 2 error

Received data not equal transmitted data
Check:
1. Check communication parameters
2. Replace robot computer board

31735: Serial channel 3 error

Received data not equal transmitted data
Check:
1. Check communication parameters
2. Replace robot computer board

31736: Serial channel 5 error

Received data not equal transmitted data
Check:
1. Check communication parameters
2. Replace robot computer board

31737: Serial channel 8 error

Received data not equal transmitted data
Check:
1. Check communication parameters
2. Replace robot computer board

31738: Timer or Counter error

Timer or Counter %.f error
Check:
Replace robot computer board

31742: Serial channel 2 error

Handshake error
Check:
1. Check communication parameters
2. Replace robot computer board

31743: Serial channel 3 error

Handshake error
Check:
1. Check communication parameters
2. Replace robot computer board

31744: Serial channel 5 error

Handshake error
Check:
1. Check communication parameters
2. Replace robot computer board

31745: Serial channel 8 error

Handshake error
Check:
1. Check communication parameters
2. Replace robot computer board

31746: Serial channel %.f error

Handshake error
Check:
1. Check communication parameters
2. Replace robot computer board

31747: Serial channel %.f error

Interrupt error
Check:
1. Check communication parameters
2. Replace robot computer board

32301: Memory error MAIN COMPUTER

Check:
Replace main computer board

32302: Memory error MAIN COMPUTER

Check:
Replace main computer board

32303: Memory error MAIN COMPUTER

Check:
Replace main computer board

32305: Type error MEMORY EXPANSION

Check:
Replace memory expansion board

33301: Error in axis computer

Check:
Replace robot computer board

33302: Error in axis computer

Check:
Replace robot computer board

33303: Error in axis computer

Check:
Replace robot computer board

33304: Error in axis computer

Check:
Replace robot computer board

33305: Error in axis computer memory

Check:
Replace robot computer board

33306: Drive unit jumper test

Error in drive unit jumper test

33307: Drive unit jumper test

Error in drive unit jumper test

33308: Error in axis computer

Check:
Replace robot computer board

33309: Error in axis computer

Check:
Replace robot computer board

33310: Error in axis computer

Check:
Replace robot computer board

33311: Axis computer

Current ref. loopback error
Check:
Replace robot computer board

33312: Axis computer error

RUNNING/DRVFLT signal error
Check:
1. Replace robot computer board
2. Check drive system boards

33313: Communication jumper error

Ext axis communication jumper error

33314: Axis computer error

Check:
Replace robot computer board

33315: Axis computer error

Check:
Replace robot computer board

33316: Axis computer error. loopback comm.

error.
Check:
Replace robot computer board

33317: Axis computer error. JUMPER comm. error

Check:
Replace robot computer board

37001: Contactor activate Error

Motor On contactor did not activate or
Motor On signal is not distributed through
auxiliary contact
Check:
Restart system
Replace Motor On contactor or
auxiliary contact
Replace system board

37002: DSQC306 not running

Main computer software not downloaded
or not running

37003: Main computer error

Check:
Replace main computer board

37004: Main computer error

Check:
Replace main computer board

37005: Main computer error

Check:
Replace main computer board

37006: Main computer error

Check:
Replace main computer board

37007: Main computer error

Check:
Replace main computer board

37008: Main computer error

Check:
Replace main computer board

37009: Main computer error

Check:
Replace main computer board

37010: Main computer error

Check:
Replace main computer board

37011: Main computer error

Check:
Replace main computer board

37012: Main computer error

Check:
Replace main computer board

37013: Main computer error

Check:
Replace main computer board

37014: Main computer error

Check:
Replace main computer board

37015: Main computer error

Check:
Replace main computer board

37016: Main computer error

Check:
Replace main computer board

37017: Main computer error

Check:
Replace main computer board

37018: Main computer error

Check:
Replace main computer board

37019: Main computer error

Check:
Replace main computer board

37020: Main computer error

Check:
Replace main computer board

37021: Main computer error

Check:
Replace main computer board

37022: Main computer error

Check:
Replace main computer board

37023: Main computer error

Check:
Replace main computer board

37024: Main computer error

Check:
Replace main computer board

37025: Main computer error

Check:
Replace main computer board

37026: Main computer error

Check:
Replace main computer board

37027: Main computer error

Check:
Replace main computer board

37028: Main computer error

Check:
Replace main computer board

37029: Main computer error

Check:
Replace main computer board

37030: Main computer error

Check:
Replace main computer board

37031: Main computer error

Check:
Replace main computer board

37032: Main computer error

Check:
Replace main computer board

37033: Main computer error

Check:
Replace main computer board

37034: Main computer error

Check:
Replace main computer board

37035: Main computer error

Check:
Replace main computer board

37036: Main computer error

Check:
Replace main computer board

37037: Main computer error

Check:
Replace main computer board

37038: Main computer error

Check:
Replace main computer board

37039: Main computer error

Check:
Replace main computer board

37040: Main computer error

Check:
Replace main computer board

37041: Main computer error

Check:
Replace main computer board

37042: Main computer error

Check:
Replace main computer board

37043: Main computer error

Check:
Replace main computer board

37044: Main computer error

Check:
Replace main computer board

37045: Main computer error

Check:
Replace main computer board

37046: Main computer error

Check:
Replace main computer board

37047: Main computer error

Check:
Replace main computer board

37048: Main computer error

Check:
Replace main computer board

32247: Mailbox 1 interrupt error

Mailbox 1 interrupt error on
IO computer
Check:
Replace robot computer board

32248: Mailbox 2 interrupt error

Mailbox 2 interrupt error on
IO computer
Check:
Replace robot computer board

33201: Axis cpu Read Error

Error in reading from axis computer driver. Axis computer driver did not return correct number of bytes.
Check:
Check system configuration
Reload system
Replace robot computer board

33202: Axis cpu Write Error

Error in writing to the axis computer driver. Axis computer driver did not return correct number of bytes.
Check:
Check system configuration
Reload system
Replace robot computer board

33203: Axis cpu ioctl Error

Error in ioctl to the axis computer driver.
Fail to execute ioctl command
Check:
Restart system
Reload system
Replace robot computer board

33220: Axis computer failure

Axis computer has returned an error code indicating hardware failure
Check:
Reload system
Replace robot computer board

38001: Battery backup lost

Battery backup on serial measurement
board %.f
lost since last
power down or restart
Check:
Check battery voltage during power off
after 18 hours recharging in power on
Check battery connection to serial
measurement board
Replace battery

33101: X resolver Error

Failure in X resolver signal on
channel %.f
X signal is less than noise value
Check:
Check resolver and resolver connections.
Replace measurement boards

33102: Y resolver Error

Failure in Y resolver signal on
channel %.f
Y signal is less than noise value
Check:
Check resolver and resolver connections
Replace measurement boards

33103: X or Y resolver Error

Failure in X or Y resolver signal on
channel %.f
Sum of squared X and Y exceeds max
Check:
Check resolver and resolver connections
Replace measurement boards

33104: X and Y resolver Error

Failure in X and Y resolver signals on
channel %.f
X, Y signals are less than noise value
Check:
Check resolver and resolver connections
Replace measurement boards

33105: Resolver Feed Error

Failure in feed signal to resolvers
Check:
Check resolver connections
Replace axes board

33106: Drive Unit Offset Error

Drive Unit offset exceeded maximum on
channel %.f
Check:
Restart system
Replace drive unit

33107: Incorrect DC-link type

Physical DC-link type does not match
configuration
Check:
Check/modify system configuration

33108: Incorrect Drive Unit Type

Physical Drive Unit Type for channel %.f
does not match configuration
Check:
Check/modify system configuration
Replace drive unit

33148: Axis Computer Error

Axis computer was stopped with
hw interrupt due to miscellaneous error
Check:
Check system configuration
Reload system
Replace robot computer board

33150: Axis Computer Int Error

Axis computer was stopped with
hw interrupt due to interrupt error
Check:
Reload system
Replace robot computer board

33151: Axis Computer Output Overflow

Axis computer was stopped with hw
interrupt due to output overflow error
Check:
Reload system
Replace robot computer board

33152: Axis Computer Drive Unit

Axis computer was stopped with
hw interrupt due to drive unit error
Check:
Check system configuration
Reload system
Replace drive unit

33153: Axis Comuter Tach Overflow

Axis computer was stopped with
interrupt due to tachometer register
overflow
Check:
Check system configuration and restart
system
Reload system
Replace drive unit

33154: Axis Computer XY Overflow

Axis computer was stopped with
hw interrupt due to X, Y register
overflow
Check:
Restart system and check
synchronization
Reload system

33155: Axis Computer RC Overflow

Axis computer was stopped with
hw interrupt due to ring controller
register overflow
Check:
Restart system and check rev. counters
Reload system

33156: Transmission failure

Contact lost with serial measurement
system. Axis computer stopped
due to transmission timeout.
Check:
Check connections from cabinet to robot
and serial measurement board(s).
Replace measurement board or
robot computer

33157: Transmission failure

Axis computer detected failure in
transmission to/from serial
measurement system.
Check:
Check connections/cables for serial
measurement system. Check shieldings
Check for high electromagnetic
disturbances along cable run to robot
Replace measure board or robot computer

33158: Axis Computer Driver Clock failure

Axis computer driver clock failure
Main computer is not responding on
request
Check:
Reload system
Replace main computer board

33159: Manual Mode Speed Warning

Manual mode speed exceeded for
the joint connected to axc channel %.f.
Check:
Check for correct load mass definition
Check controller parameters on external
axes
Check for robot singularity
Replace drive unit

33210: Feedback Position Error

Driver failed to read feedback position
on joint %.f
Check:
Restart system
Replace main computer board

33211: Position Control Underrun

Unable to complete position control in
the allowed time
Check:
Reload system

33212: DMA Time out Error

DMA access failed from main computer to
axis computer
Check:
Reload system
Replace main computer board and
axis computer board

33213: DMA Operation Error

DMA Control Operation failed from Main
computer to Axis computer
Check:
Reload system
Replace main computer board and
axis computer board

38010: Serial Board not found

Serial measurement board %.f not found
Check:
Check system configuration parameters
Check connections and cables to
serial measurement system
Replace serial measurement board

38011: Data Transmission Error

Failure in transmission of data to/from
serial measurement board %.f
Check:
Check connections and cables to serial
measurement system. Check shieldings
Check for high electromagnetic
disturbances along cable run
Replace measure board or robot computer

38012: Serial Offset X Error

Offset error in X signal on serial
measurement board %.f
Check:
Replace serial measurement board

38013: Serial Offset Y Error

Offset error in Y signal on serial
measurement board %.f
Check:
Replace serial measurement board

38014: Serial Linearity Error

Linearity error in X-Y signal difference
on serial measurement board %.f
- System may still operate with warning
- System will not function with error
Check:
Replace serial measurement board

38015: Serial Linear X Error

Linearity error in X signal on serial measurement board %.f
Check:
Replace serial measurement board

38016: Serial Linear Y Error

Linearity error in Y signal on serial measurement board %.f
Check:
Replace serial measurement board

38017: Parallel Comm Error

Communications error to axes board
Check:
Check connections on axes board
Check system configuration

38018: Parallel Offset AD X

X signal offset exceeds tolerance on axes board
Check:
Replace axes board

38019: Parallel Offset AD Y

Y signal offset exceeds tolerance on axes board
Check:
Replace axes board

38020: Parallel Offset DA Error

Offset exceeds tolerance error D/A converter on channel %.f on axes board
Check:
Use different measurement channel
Replace axes board

38021: Parallel Linearity DA-AD

Linearity error in D/A and A/D converter
on channel %.f on axes board
Check:
Replace axes board

38022: Configuration Error

Error in configuration of measurement
system on channel %.f
Check:
Check/change system configuration
parameters

39001: Drive System Error

DC-link is not connected
Check:
Insert DC-link
Replace DC-link

39002: Drive System Error

DC-link Power-up status wrong
Check:
Restart system
Replace DC-link

39003: Drive System Error

DC-link output voltage too high
Check:
Check connection to shunt resistor
Replace DC-link

39004: Drive System Error

DC-link voltage not valid
Check:
Check voltage from Motor On contactor
Replace DC-link

39005: Drive System Error

DC-link temperature too high
Check:
Check cooling fan(s) or air conditioner
Check AC voltage to DC-link
Modify user progam
Replace DC-link

39006: Drive System Error

Shunt temperature too high
Check:
Too much deceleration
Modify user progam
Check AC voltage to DC-link
Replace DC-link

39007: Drive System Error

+/- 15V out of limit
Check:
Check +/- 15V from power supply
Replace DC-link

39008: Drive System Error

Low current fault on drive unit %.f
Check:
Check for broken wires
Check if motion parameter Mains
tolerance min correspond to
real mains.
Check/replace the drive unit

39009: Drive System Error

Current too high on drive unit %.f
Check:
Check if motor or motor circuit is
short circuit
Check/replace drive unit

39010: Drive System Error

Temperature too high on drive unit %.f
Check:
Check cooling fan(s) or air conditioner
Modify user progam
Check/replace drive unit.

6 Program error messages

40001: Argument error

Task %s: More than one
occurence of same optional parameter
Check:
Make sure that the same optional
parameter is not specified more
than once in the same routine call.

40002: Argument error

Task %s: Excluding
arguments must have conditional value
Check:
Arguments may not be specified for more
than one parameter from a list of
parameters that exclude each other
unless all values are conditional
argument values.

40003: Argument error

Task %s: Expecting
required argument
Check:
Check that the arguments are specified
in the same order as the parameters for
the routine being called.

40004: Argument error

Task %s: Argument for REF
parameter is not data reference
Check:
Make sure the argument expression is
just a data or parameter reference.

40005: Argument error

Task %s: Argument for
INOUT'parameterisnotvariableor'
persistent reference or is read only
Check:
Make sure the argument expression is
just a variable, persistent, variable
parameter or persistent parameter
reference. The variable or persistent
may not be read only.

40006: Argument error

Task %s: Missing optional
argument value
Check:
Only switch'parametersmaybe'
specified by name only. Optional
parameters of other types must be
assigned a value. Add a value.

40007: Argument error -

Task %s: Optional argument
at wrong place in argument
list
Check:
Check that the arguments are specified
in the same order as the parameters for
the routine being called.

40008: Argument error

Task %s: Reference to
optional parameter in required argument
Check:
An argument corresponding to an optional
parameter must be specified with a
leading 'character.Changethe'
required argument into an optional.

40009: Argument error

Task %s: Reference to
required parameter in conditional
argument value
Check:
A conditional value for an optional
parameter must refer an optional
parameter in the calling routine.
Change the conditional value.

40010: Argument error

Task %s: Reference to
required parameter in optional argument
Check:
An argument corresponding to a required
parameter must not be specified with the
leading 'character.Changethe'
optional argument into a reguired.

40011: Argument error

Task %s: Named required
argument at wrong place in argument list
Check:
Check that the arguments are specified
in the same order as the parameters for
the routine being called.

40012: Argument error

Task %s: switch'argument'
cannot have a value
Check:
An argument corresponding to a switch"
parameter may not be assigned a value.
Remove the value.

40013: Argument error

Task %s: Too few arguments
in routine call
Check:
A routine call must supply values for all required parameters of the routine being called. Add more arguments to fit the parameter list.

40014: Argument error

Task %s: Too many
arguments in routine call
Check:
Remove arguments so that no arguments are supplied in excess to those defined by the parameter list of the called routine.

40015: Data declaration error

Task %s: Array dimension
must be > 0
Check:
Array dimensions must be positive. Change the dimension expression.

40016: Data declaration error

Task %s: Too many
dimensions in array definition
Check:
An array may have at most 3 dimensions. Rewrite the program so that no more than 3 dimensions are needed.

40017: Type error

Task %s: Indexed data is
not of array type
Check:
Only data that have been declared to be arrays may be indexed. Remove the index or indices, or declare the data to be an array.

40018: Type error

Task %s: Data is not of
record type
Check:
Components are only available for data of record type. Check the type and name of the referenced data.

40019: Limit error

Task %s: Error when
creating sdb entry
Check:
An error occurred when the persistent was to be inserted into the shared database. Probably the database is full.

40020: Data declaration error

Task %s: Expression not
constant expression
Check:
Expressions contained within data declarations must be constant expressions. Make sure the expression does not contain any variable or persistent reference, or function call.

40021: Instruction error

Task %s: RETURN from
function must have an expression
Check:
A RETURN instruction within a function must specify a function value to be returned. Add a value expression.

40022: Type error

Task %s: Illegal
combination of operand types for *"
operator
Check:
The allowed type combinations for the
two operands of the *'operatorare'
num'*'num','num'*'pos','pos'*'num','
pos'*'pos'and'orient'*'orient'.Check'
the types of the operands.

40023: Instruction error

Task %s: Cannot transfer
control into another instruction list
Check:
Make sure that the label is located in
the same instruction list as the GOTO
instruction, at the same or an outer
level. It is not possible to jump into
a program flow instruction.

40024: Type error

Task %s: Illegal type for
left operand of binary +'or'-"
operator
Check:
The allowed types for the operands of
the +'operatorare'num','pos'and'
string',forthe'-'operator'num'and'
pos'.Checkthetypeoftheoperand.'

40025: Type error

Task %s: Illegal type for
operand of unary +'or'-'operator'
Check:
The allowed types for the operands of
the +'and'-'operatorsare'num'and'
pos'.Checkthetypeoftheoperand.'

40026: Type error

Task %s: Illegal type for
right operand of binary +'or'-''
operator
Check:
The allowed types for the operands of
the +'operatorare'num','pos'and'
string',forthe'-'operator'num'and'
pos'.Checkthetypeoftheoperand.'

40027: Type error

Task %s: Illegal type for
left operand of /','DIV'or'MOD''
operator
Check:
The only allowed type for the operands
of the /','DIV'and'MOD'operators'
is num'.Checkthetypeoftheoperand.'

40028: Type error

Task %s: Illegal type for
right operand of /','DIV'or'MOD''
operator
Check:
The only allowed type for the operands
of the /','DIV'and'MOD'operators'
is num'.Checkthetypeoftheoperand.'

40029: Type error

Task %s: Illegal type for
left operand of '<', '<=', '>' or '>='
operator
Check:
The only allowed type for the operands
of the '<', '<=', '>' and '>=' operators
is num'. Check the type of the operand.'

40030: Type error

Task %s: Illegal type for
right operand of '<', '<=', '>' or '>='
operator
Check:
The only allowed type for the operands
of the '<', '<=', '>' and '>=' operators
is num'. Check the type of the operand.'

40031: Type error

Task %s: Illegal type for
left operand of *'operator'
Check:
The allowed types for the operands of
the *'operatorare'num','pos'and'
orient'.Checkthetypeoftheoperand.'

40032: Type error

Task %s: Illegal type for
right operand of *'operator'
Check:
The allowed types for the operands of
the *'operatorare'num','pos'and'
orient'.Checkthetypeoftheoperand.'

40033: Type error

Task %s: Illegal type for
operand of NOT'operator'
Check:
The only allowed type for the operand of
the NOT'operatoris'bool'.Checkthe'
type of the operand.

40034: Type error

Task %s: Illegal type for
left operand of OR','XOR'or'AND''
operator
Check:
The only allowed type for the operands
of the OR','XOR'and''AND'operatoris'
bool'.Checkthetypeoftheoperand.'

40035: Type error

Task %s: Illegal type for
right operand of OR','XOR'or'AND"
operator
Check:
The only allowed type for the operands
of the OR','XOR'and"AND'operatoris'
bool'.Checkthetypeoftheoperand.'

40036: Type error

Task %s: Incorrect number
of indices in index list
Check:
Make sure that the number of indices in
the index list is the same as the number
of dimensions of the indexed data array.

40037: Data declaration error

Task %s: LOCAL illegal in
routine constant declaration
Check:
Only program data declarations may have
the LOCAL attribute. Remove the LOCAL
attribute or move the declaration
outside of the routine.

40038: Data declaration error

Task %s: LOCAL illegal in
routine variable declaration
Check:
Only program data declarations may have
the LOCAL attribute. Remove the LOCAL
attribute or move the declaration
outside of the routine.

40039: Name error

Task %s: Constant name
ambiguous
Check:
Routine data must have names that are unique within the routine. Program data must have names that are unique within the module. Rename the data or change the conflicting name.

40040: Name error

Task %s: Global constant
name ambiguous
Check:
Global data must have names that are unique among all the global data, global routines and modules in the entire task program. Rename the data or change the conflicting name.

40041: Name error

Task %s: Global persistent
name ambiguous
Check:
Global data must have names that are unique among all the global data, global routines and modules in the entire task program. Rename the data or change the conflicting name.

40042: Name error

Task %s: Global routine
name ambiguous
Check:
Global routines must have names that are unique among all the global data, global routines and modules in the entire task program. Rename the routine or change the conflicting name.

40043: Name error

Task %s: Global variable
name ambiguous
Check:
Global data must have names that are unique among all the global data, global routines and modules in the entire task program. Rename the data or change the conflicting name.

40044: Name error

Task %s: Label name
ambiguous
Check:
Labels must have names that are unique within the routine. Rename the label or change the conflicting name.

40045: Name error

Task %s: Module name
ambiguous
Check:
Modules must have names that are unique among all the global data, global routines and modules in the entire task program. Rename the module or change the conflicting name.

40046: Name error

Task %s: Parameter name
ambiguous
Check:
Parameters must have names that are unique within the routine. Rename the parameter or change the conflicting name.

40047: Name error

Task %s: Persistent name
ambiguous
Check:
Program data must have names that are unique within the module. Rename the data or change the conflicting name.

40048: Name error

Task %s: Routine name
ambiguous
Check:
Routines must have names that are unique within the module. Rename the routine or change the conflicting name.

40049: Name error

Task %s: Variable name
ambiguous
Check:
Routine data must have names that are unique within the routine. Program data must have names that are unique within the module. Rename the data or change the conflicting name.

40050: Type error

Task %s: Operand types for
binary +'or'-'operatornotequal'
Check:
The two operands of the +'and'-''
operators must have equal type. Check the operand types.

40051: Type error

Task %s: Operand types for
'=' or '<>' operator not equal
Check:
The two operands of the '=' and '<>'
operators must have equal type. Check the operand types.

40052: Instruction error

Task %s: RETURN with
expression only allowed in function
Check:
In a procedure or trap the RETURN instruction must not specify a return value expression. Remove the expression.

40053: Instruction error

Task %s: RAISE in error
handler must not have an expression
Check:
A RAISE instruction within an error handler can only be used to propagate the current error, and may therefore not specify an error number. Remove the error number expression.

40054: Type error

Task %s: Different
dimension of array type and aggregate
Check:
Make sure that the number of expressions in the aggregate is the same as the dimension of the data array.

40055: Type error

Task %s: Assignment target
must have value or semi-value type
Check:
The type, of the data to be assigned a value, must be a value or semi-value type. Data of non-value types may only be set by special type specific predefined instructions or functions.

40056: Type error

Task %s: Type for left
operand of '=' or '<>' operator not
value or semi-value type
Check:
The '=' and '<>' operators may only be
applied to expressions of value or semi-
value type. If comparisons are to be
made, special type specific predefined
functions are needed.

40057: TYpe error

Task %s: Type for right
operand of '=' or '<>' operator not
value or semi-value type
Check:
The '=' and '<>' operators may only be
applied to expressions of value or semi-
value type. If comparisons are to be
made, special type specific predefined
functions are needed.

40058: Type error

Task %s: TEST expression
not of value or semi-value type
Check:
The TEST instruction may only be applied
to an expression of value or semi-value
type. If comparisons are to be made,
special type specific predefined
functions are needed.

40059: Data declaration error

Task %s: Place holder for
value expression not allowed in
definition of named constant
Check:
Complete the data declaration or change
the data name to a place holder.

40060: Data declaration error

Task %s: Place holder for
array dimension not allowed in
definition of named constant or variable
Check:
Complete the data declaration or change
the data name to a place holder.

40061: Routine declaration error

Task %s: Place holder for
parameter array dimensions not allowed
in definition of named routine
Check:
Complete the parameter declaration or
change the routine name to a place
holder.

40062: Name error

Task %s: Place holder for
parameter name not allowed in definition
of named routine
Check:
Complete the routine declaration or
change the routine name to a place
holder.

40063: Data declaration error

Task %s: Place holder for
initial value expression not allowed in
definition of named persistent
Check:
Complete the data declaration or change
the data name to a place holder.

40064: Routine declaration error

Task %s: Place holder for
parameter not allowed in definition of
named routine
Check:
Complete the parameter declaration,
remove the place holder or change the
routine name to a place holder.

40065: Reference error

Task %s: Place holder for
type not allowed in definition of named
data or routine
Check:
Complete the data or routine declaration
or change the data or routine name to a
place holder.

40066: Data declaration error

Task %s: Place holder for
initial value expression not allowed in
definition of named variable
Check:
Complete the data declaration or change
the data name to a place holder.

40067: Type error

Task %s: Too few
components in record aggregate
Check:
Make sure that the number of expressions
in the aggregate is the same as the
number of components in the record type.

40068: Type error

Task %s: Too many
components in record aggregate
Check:
Make sure that the number of expressions
in the aggregate is the same as the
number of components in the record type.

40069: Reference error

Task %s: Data reference is
ambiguous
Check:
At least one other object sharing the
same name as the referred data is
visible from this program position. Make
sure that all object names fulfill the
naming rules regarding uniqueness.

40070: Reference error

Task %s: Function
reference is ambiguous
Check:
At least one other object sharing the same name as the referred function is visible from this program position. Make sure that all object names fulfill the naming rules regarding uniqueness.

40071: Reference error

Task %s: Label reference
is ambiguous
Check:
At least one other object sharing the same name as the referred label is visible from this program position. Make sure that all object names fulfill the naming rules regarding uniqueness.

40072: Reference error

Task %s: Procedure
reference is ambiguous
Check:
At least one other object sharing the same name as the referred procedure is visible from this program position. Make sure that all object names fulfill the naming rules regarding uniqueness.

40073: Reference error

Task %s: Trap reference is
ambiguous
Check:
At least one other object sharing the same name as the referred trap is visible from this program position. Make sure that all object names fulfill the naming rules regarding uniqueness.

40074: Reference error

Task %s: Not entire data
reference
Check:
The specified name identifies an object other than data. Check if the desired data is hidden by some other object with the same name.

40075: Reference error

Task %s: Not function
reference
Check:
The specified name identifies an object other than a function. Check if the desired function is hidden by some other object with the same name.

40076: Reference error

Task %s: Not label
reference
Check:
The specified name identifies an object other than a label. Check if the desired label is hidden by some other object with the same name.

40077: Reference error

Task %s: Not optional
parameter reference in conditional
argument value
Check:
The specified name identifies an object other than an optional parameter. Change the name to refer to an optional parameter.

40078: Reference error

Task %s: Not optional
parameter reference
Check:
The specified name identifies an object other than an optional parameter. Change the name to refer to an optional parameter.

40079: Reference error

Task %s: Not procedure
reference
Check:
The specified name identifies an object other than a procedure. Check if the desired procedure is hidden by some other object with the same name.

40080: Reference error

Task %s: Not required
parameter reference
Check:
The specified name identifies an object other than a required parameter. Change the name to refer to a required parameter.

40081: Reference error

Task %s: Not trap
reference
Check:
The specified name identifies an object other than a trap. Check if the desired trap is hidden by some other object with the same name.

40082: Reference error

Task %s: Not type name
Check:
The specified name identifies an object other than a type. Check if the desired type is hidden by some other object with the same name.

40083: Type error

Task %s: Not value type
Check:
Only variables which lack initial value, and VAR'modeparametersmaybeof' semi-value or non-value type.

40084: Reference error

Task %s: Reference to unknown entire data
Check:
No data (or other object) with the specified name is visible from this program position.

40085: Reference error

Task %s: Reference to unknown function
Check:
No function (or other object) with the specified name is visible from this program position.

40086: Reference error

Task %s: Reference to unknown label
Check:
The routine contains no label (or other object) with the specified name.

40087: Reference error

Task %s: Reference to
unknown optional parameter
Check:
The called routine contains no optional
parameter (or other object) with the
specified name.

40088: Reference error

Task %s: Reference to
unknown procedure
Check:
No procedure (or other object) with the
specified name is visible from this
program position.

40089: Reference error

Task %s: Reference to
unknown record component
Check:
The record type contains no record
component with the specified name.

40090: Reference error

Task %s: Reference to
unknown required parameter
Check:
The called routine contains no required
parameter (or other object) with the
specified name.

40091: Reference error

Task %s: Reference to
unknown trap
Check:
No trap (or other object) with the
specified name is visible from this
program position.

40092: Reference error

Task %s: Unknown type name
Check:
No data type (or other object) with the specified name is visible from this program position.

40093: Instruction error

Task %s: Assignment target is read only
Check:
The data to be assigned a value may not be a constant, read only variable or read only persistent.

40094: Data declaration error

Task %s: Persistent declaration not allowed in routine
Check:
Persistents may only be declared at module level. Move the persistent declaration from the routine.

40095: Instruction error

Task %s: RAISE without expression only allowed in error handler
Check:
Add an error number expression to the RAISE instruction.

40096: Instruction error

Task %s: RETRY only allowed in error handler
Check:
The RETRY instruction may only be used in error handlers. Remove it.

40097: Instruction error

Task %s: TRYNEXT only
allowed in error handler
Check:
The TRYNEXT instruction may only be used in error handlers. Remove it.

40098: Parameter error

Task %s: switch"
parameter must have transfer mode IN
Check:
Remove the parameter transfer mode specifier. If IN transfer mode is not sufficient, change the data type of the parameter.

40099: Parameter error

Task %s: switch"
parameter cannot be dimensioned
Check:
Remove the array dimension specification, or change the data type of the parameter.

40100: Parameter error

Task %s: switch'only'
allowed for optional parameter
Check:
Change the parameter into an optional parameter, or change the data type of the parameter. If the object is not a parameter, change the data type.

40101: Type error

Task %s: Type mismatch
Check:
The expression is not of the expected data type.

40102: Type error

Task %s: Type mismatch of aggregate
Check:
The aggregate does not match the expected data type.

40103: Type error

Task %s: Persistent type mismatch
Check:
There is already a persistent data with the same name but with another data type. Rename the persistent, or change its data type.

40104: Data declaration error

Task %s: Cannot determine array dimensions (circular constant references ?)
Check:
Check that any referred constants are correctly defined. If so, the program is too complex. Try to rewrite the declarations.

40105: Data declaration error

Task %s: Cannot determine type of constant value (circular constant references ?)
Check:
Check that any referred constants are correctly defined. If so, the program is too complex. Try to rewrite the declarations.

40106: Data declaration error

Task %s: Cannot evaluate constant value expression (circular constant references ?)
Check:
Check that any referred constants are correctly defined. If so, the program is too complex. Try to rewrite the declarations.

40107: Data declaration error

Task %s: Cannot determine type of variable value (circular constant references?)
Check:
Check that any referred constants are correctly defined. If so, the program is too complex. Try to rewrite the declarations.

40108: Type error

Task %s: Unknown aggregate type
Check:
An aggregate may not be used in this position since there is no expected data type. Declare data with the desired data type and aggregate value. Use the name of the data instead of the aggregate.

40121: Argument error

Task %s: Argument for PERS'parameterisnotpersistent' reference or is read only
Check:
Make sure the argument expression is just a persistent or persistent parameter reference. The persistent may not be read only.

40122: Argument error

Task %s: Argument for
VAR'parameterisnotvariable'
reference or is read only
Check:
Make sure the argument expression is just a variable or variable parameter reference. The variable may not be read only.

40123: Instruction error

Task %s: Interrupt number
is not static variable reference or is read only
Check:
Make sure the interrupt number is just a variable or variable parameter reference. The variable must be static. The variable may not be read only.

40124: Value error

Task %s: Integer value too
large
Check:
The value of the expression must be an integer value. The current value is outside the integer range.

40125: Value error

Task %s: Not integer value
Check:
The value of the expression must be an exact integer value. The current value has a fraction part.

40141: Argument error

Task %s: Duplicated
present conditional argument
Check:
More than one present conditional argument for the same parameter

40142: Value error

Task %s: Division by zero
Check:
Cannot divide by 0. Rewrite the program so that the divide operation is not executed when the divisor is 0.

40143: Limit error

Task %s: Exceeded maximum number of allowed RETRYs
Check:
The error correction performed before the RETRY instruction is executed, is probably not enough to cure the error. Check the error handler.

40144: Instruction error

Task %s: Attempt to execute place holder
Check:
Remove the place holder or the instruction containing it, or make the instruction complete. Then continue execution.

40145: Limit error

Task %s: Execution stack overflow
Check:
The program is too complex to execute. Probably the program contains recursive routines.

40146: Execution error

Task %s: Fatal runtime error
Check:
A fatal runtime error has occurred. Fatal runtime errors causes immediate termination of execution. See previous message for the actual cause.

40147: Execution error

Task %s: Function does not
return any value
Check:
The end of the function has been reached
without a RETURN instruction being
executed. Add a RETURN instruction
specifying a function return value.

40148: Value error

Task %s: Illegal
orientation value
Check:
Attempt to use illegal orientation
(quaternian) value

40149: Value error

Task %s: Illegal error
number in RAISE
Check:
Only error numbers in the range 1-99 is
allowed in the RAISE instruction.

40150: Execution error

Task %s: Illegal return
code from ReaL routine
Check:
This is always caused by an internal
error in the ReaL routine.

40151: Limit error

Task %s: No more interrupt
number available
Check:
There is a limited number of interrupt
numbers available. Rewrite the program
to use fewer interrupt numbers. This
message may also occur as a consequence
of a system error.

40152: Value error

Task %s: Negative operand
not allowed
Check:
The MOD'operator only allows non' negative operands. Change the program to make sure that the operator is not applied to negative values.

40153: Type error

Task %s: Conformant array
dimension incompatible
Check:
The array is not of the expected size. Array assignment may only be performed on arrays of identical size.

40154: Reference error

Task %s: Optional
parameter not present
Check:
The value of a non present optional parameter may not be referred. Use the predefined function Present' to check' the presence of the parameter before using its value.

40155: Value error

Task %s: Array index out
of bounds
Check:
The array index value violates the declared size of the array.

40156: Limit error

Task %s: Runtime stack
overflow
Check:
The program is too complex to execute. Probably the program contains recursive routines.

40157: Value error

Task %s: String too long
Check:
Concatenated string value exceeds the maximum allowed length. Rewrite the program to use strings of lesser length.

40158: Execution error

Task %s: Unhandeled non-fatal runtime error %i
Check:
A non-fatal runtime error has occurred but was not handeled by any ERROR clause. See previous message for the actual cause.

40159: Execution error

Task %s: Unhandeled raise error %i
Check:
An error was raised by a RAISE instruction but was not handeled by any ERROR clause.

40160: Execution error

Task %s: Unhandeled non-fatal runtime error
Check:
A non-fatal runtime error has occurred but was not handeled by any ERROR clause.

40161: Execution error

Task %s: Variable and trap routine already connected
Check:
It is not legal to connect a specific variable with a specific trap routine more than once.

40162: Execution error

Task %s: Execution aborted
Check:
Execution was aborted due to a fatal error.

40163: Execution error

Task %s: Execution could not be restarted
Check:
Execution could not be continued after power failure. Restart the program.

40171: Value error

Task %s: Array dimension out of range
Check:
The value of the DimNo'parameter of' the Dim'function must be in the range 1-3.

40 172: Type error

Task %s: Data is not an array
Check:
The ArrPar'parameter of the'Dim" function must be an array.

40173: Value error

Task %s: Unknown interrupt number
Check:
Check that the specified interrupt variable has been initialized by CONNECT, and that the interrupt has been defined using the ISignalDI or other interrupt definition instruction.

40201: Name error

Task %s: Ambiguous symbol
name
Check:
Installed objects must have names that are unique. Rename the object or change the conflicting name.

40202: Limit error

Task %s: Error when
creating sdb entry
Check:
An error occurred when the persistent was to be inserted into the shared database. Probably the database is full.

40203: Type definition error

Task %s: Alias of alias
not allowed
Check:
Is is not possible to define an alias type equal to another alias type. Instead, define two alias types equal to the same atomic or record type.

40204: Symbol definition error

Task %s: 'ANYTYPE#'
parameter cannot be dimensioned
Check:
Remove the dimension specification. 'ANYTYPE#' includes array types.

40205: Symbol definition error

Task %s: 'ANYTYPE#' only
allowed for parameter
Check:
Use another type.

40206: Parameter error

Task %s: alt'mustnotbe'
set for first optional parameter in
alternatives list
Check:
Make sure that only the second and
following in each list of excluding
optional parameters are marked as
alternatives.

40207: Parameter error

Task %s: REF mode
parameter cannot be dimensioned
Check:
Remove the array dimension
specification, or change the mode of the
parameter.

40208: Parameter error

Task %s: switch"
parameter can not be dimensioned
Check:
Remove the array dimension
specification, or change the data type
of the parameter.

40209: Parameter error

Task %s: switch"
parameter must have transfer mode IN
Check:
Remove the parameter transfer mode
specifier. If IN transfer mode is not
sufficient, change the data type of the
parameter.

40210: Symbol definition error

Task %s: switch'only'
allowed for optional parameter
Check:
Change the parameter into an optional parameter, or change the data type of the parameter. If the object is not a parameter, change the data type.

40211: Type definition error

Task %s: Value type class
must be one of PGM_SYMVALTYP_VAL, _SEMIVAL, _NONVAL or _NONE
Check:
Change the value type class.

40212: Data declaration error

Task %s: Too many array
dimensions
Check:
An array may have at most 3 dimensions.

40213: Name error

Task %s: Symbol name must
be a RAPID identifier excluding reserved words
Check:
The names of installed objects, including parameters and components, must be legal RAPID identifiers not equal to any of the reserved words of the RAPID language. Change the name.

40214: Symbol definition error

Task %s: Missing C
function
Check:
A C-function that executes the ReaL function being defined, must be specified.

40215: Symbol definition error

Task %s: Missing value
initialization function
Check:
A value initialization function must be specified.

40216: Reference error

Task %s: Not a data type
name
Check:
The specified name identifies an object other than a type.

40217: Reference error

Task %s: Not a value data
type
Check:
Only record components, alias types, variables and VAR'mode parameters may' be of semi-value or non-value type.

40218: Symbol definition error

Task %s: Missing value
conversion function
Check:
A value conversion function must be specified for a semi-value type.

40219: Type definition error

Task %s: Private type can
only be semi-value or non-value type
Check:
Change the value type class.

40220: Type definition error

Task %s: Private type size
must be multiple of 4
Check:
All RAPID types must have a size that is a multiple of four. Change the specified type size.

40221: Type error

Task %s: Persistent type
mismatch
Check:
There is already a persistent data with the same name but with another data type. Rename the persistent, or change its data type.

40222: Reference error

Task %s: Unknown data type
name
Check:
There is no data type (or other object) with the specified name.

40223: Parameter error

Task %s: Unknown parameter
transfer mode
Check:
The specified parameter transfer mode is not one of IN, VAR','PERS','INOUT'or' REF. Use corresponding PGM_SYMPARMOD_x.

40224: Symbol definition error

Task %s: No such symbol
definition type
Check:
The symbol definition type tag does not specifiy one of the allowed symbol types (PGM_SYMDEF_x

40301: I/O error

Task %s: Permission denied

40302: I/O error

Task %s: No such file or
directory

40303: I/O error

Task %s: No space left on
device

40304: I/O error

Task %s: I/O error %i

40501: Timeout

%s
%s

40502: Digital input break

%s
%s

40503: Reference error

Device descriptor is
%s

40504: Parameter error

%s

40505: File access error

%s

40506: System access error

%s

40507: Limit error

%s

40508: Wrong orientation value in

%s

40509: Search warning

%s
Before performing next search,
make sure that TCP is moved back
to the start position of the
search path.
Check:
If no repositioning is done, before
restart of circular search, movement
that can cause damage might occur.

40510: Security warning

The move instruction cantrestart'
due to security problem.
Try to move the PP

40511: Parameter error

The parameter %s in %s
is specifed as a negative value
Check:
The parameter must be set positive.

40512: Missing external axis value

Some active external axis have
incorrect or no ordervalue.
Reprogram the position.

40513: Mechanical unit error

Not possible to activate or
deactivate mechanical unit.

40514: Execution error

Too far from path to perform
StartMove of the interrupted
movement.
Check:
Position the robot to the
interrupted position in the program.

40515: Type error

Task %s: Illegal data type
of argument for parameter %s

40516: Value error

Task %s: Illegal value of
argument for parameter %s

40517: Search error

%s
No search hit or more than 1 search
hit during stepwise forward execution.
The search instruction is ready and
next instruction can be executed.
Check:
Note that no position has been returned
from the search instruction.

40600: Argument error

No WObj specified
for movement with stationary TCP.
Check:
Add argument WObj
for actual work object.
If not movement with stationary TCP,
change argument Tool to
"robot holds the tool

40601: Argument error

Undefined if robot holds the tool
or the work object.
Check:
Check if mismatch between
argument Tool and argument WObj
for data component robhold.

40602: Argument error

Argument %s has
at least one data component
with negative value.
Check:
Set all data components
in argument %s
to positive values.

40603: Argument error

Argument %s has
not allowed negative value.
Check:
Set argument %s to positive.

40604: Argument error

Argument Tool has undefined
load of the tool.
Check:
Define the actual load of the tool
before use of the tool for jogging
or program movement.

40605: Argument error

Argument Tool has negative
load of the tool.
Check:
Define the correct load of the tool
before use of the tool for jogging
or program movement.

40606: Argument error

Argument Tool has at least one inertia data component with negative value.
Check:
Define all inertia data components (ix, iy or iz) to actual positive values.

40607: Execution error

Not allowed to change run mode from forward to backward or vice versa during running a circular movement.
Check:
If possible, select the original run mode and press start to continue the stopped circular movement. If not possible, move robot and program pointer for a new start.

40608: Argument error

Orientation definition error in %s.
Check:
All used orientations must be normalized i.e. the sum of the quaternion elements squares must equal 1.

40609: Argument error

Argument WObj specifies a mechanical unit with too long name.
Check:
Use max. 16 characters to specify the name of a mechanical coordinated unit.

40610: Argument error

Argument WObj specifies a mechanical
unit name, which is not activated
or unknown in the system.
Check:
The mechanical unit name defined in
WObj must correspond to the name
earlier defined in the system
parameters and must be activated.

40611: Execution error

Not allowed to step backwards
with actual instruction.
Check:
Not allowed to step backwards in
a circular movement, if the endpoint
of the circular movement is defined
with another tool and/or work object.

40612: Argument error

No argument programmed for
the name of the output signal.
Check:
Possible to set one position fix IO
such as digital, group of digitals
or analog output signal during the
robot movement.

40613: Argument error

Optional argument %s
can only be combined with
output signal argument %s.

40614: Argument error

Argument %s
is not 0 or 1.
Check:
Digital output signals can only be
set to 0 or 1.

40615: Argument error

Argument %s
is not an integer value.
Check:
Digital group of output signals
can only have an integer value.

40616: Argument error

Argument %s
is outside allowed limits.
Check:
Used group of digital output signals
can only be set within 0 to %s
according configuration in
the system parameters.

40617: Argument error

Argument %s
is outside allowed limits.
Check:
Used analog output signals can only be
set within %s to %s
according configuration in
the system parameters.

40618: Argument error

Argument %s
contains an illegal interrupt number.
Check:
Input interrupt number is illegal
because it has not been allocated by
the instruction CONNECT.
CONNECT do allocation and connection of
interrupt number to trap routine.

40619: Argument error

Argument %s
contains an interrupt number, which
is already in use for other purpose.
Check:
Before reuse of an interrupt variabel
again in the program, cancel old
interrupt generation and interrupt
number with instruction IDelete.

40622: Argument error

The value of argument Time in ITimer
is too low for cyclic interrupts.

40623: Argument error

The value of argument Time in ITimer
is too low for single interrupts.

40631: Instruction error

Too many move instructions in
sequence with concurrent RAPID
program execution.
Check:
Edit the program to max. 5 MoveX Conc
in sequence on the basic
execution level of the program.

40632: Instruction error

No move instructions with concurrent
RAPID program execution are allowed
within the StorePath-RestoPath part of
the program.
Check:
Edit the program so it does not
contain any MoveX Conc instructions
within the StorePath-RestoPath part of
the program.

40633: Reference error

Trigg parameter no %s reference to
undefined trigg data.
Check:
Define trigg data by executing
instruction TriggIO or TriggInt
before TriggL, TriggC or TriggJ.

40634: Reference error

Signal reference in parameter %s
contains unknown signal for the robot.
Check:
All signals should be defined in the
system parameters and should not be
defined in the RAPID program.

40635: Reference error

Argument reference in parameter %s
is not a entire persistent variable.
Check:
Not possible to use record component or
array element in argument %s.
Only possible to use entire persistent
variables for Tool, WObj or Load
in any motion instructions.

40636: Sensor error

No measurement from sensor.
Check:
Requested data is not available.

40637: Sensor error

Not ready yet.
Check:
Requested function is not ready yet

40638: Sensor error

General error.
Check:
Genaral error has occurred which is not specifically connected to the requested action. Read the block "Error log" if the function is available.

40639: Sensor error

Sensor busy, try later.
Check:
The sensor is busy with an other function.

40640: Sensor error

Unknown command.
Check:
The function requested from the sensor is unknown.

40641: Sensor error

Illegal variable or block number.
Check:
Requested variable or block is not defined in the sensor.

40642: Sensor error

External alarm.
Check:
Alarm from external equipment.

40643: Sensor error

Camera alarm.
Check:
Some error has been detected in the camera. Run Camcheck to test if the camera is OK.

40644: Sensor error

Temperature alarm.
Check:
The camera is overheated it needs more cooling air and/or water.

40645: Sensor error

Value out of range.
Check:
The value of the data sent to the sensor is out of range.

40646: Sensor error

Camera check failed.
Check:
The CAMCHECK function failed. The camera is broken. Send it for repair.

40647: Sensor error

Communication time out.
Check:
Increase the time out time and check the connections to the sensor.

40648: Search error

Not possibe to do StorePath while searching on basic path level.
Check:
If using program with robot movement in TRAP, then such interrupt must be deactivated during any searching.
E.g. ISleep - SearchL - IWatch

40700: Syntax error

The task %s, refuse to
load a program due to syntax error:
%s

40701: Program memory full

The task %s, has only
%i free bytes in its
user space
Check:
Remove some other module and try
again.

7 Motion error messages

50001: Serious motion error

Not possible to proceed motion control
Check:
Start up the system again

50021: Joint position error

Actual position of joint %s
is too far away from the ordered
position
Check:
Check trim parameters, external
forces or hardware.

50022: Too low DC-link voltage

Check:
Check voltage from Motor On contactors
Replace DC-link

50023: Stop-/Restart error

The stop was made when too many move
instructions were queued for execution.
Restart is not possible
Check:
Check the number of move instructions
with concurrency. Move the start point
and start a new movement.

50024: Corner path failure

A corner path was executed as
a stop point due to a time delay.
Check:
Check the number of instructions
between the move instructions.

50025: Restart too far from path

Check:
Move back to path.

50026: Singularity or Zone error

1 Robot too close to singularity
2 MoveL to MoveJ corner zone error
Check:
1 Use the joystick to move away from the singularity or run a program in joint coordinates
2 Use fine point or modify position

50027: Joint Out of Range

Joint %s is out of working range
Check:
Use the joystick to move the joint into its working range

50028: Jog in wrong direction

Joint %s is out of working range
Check:
Use the joystick to move the joint in opposite direction.

50029: Robot outside its limits

The robot has reached the configuration limit for the parallelogram transmission.
Check:
Use the joystick to move the involved joint into the working range again.

50030: Robot outside its limits

Jogging was made in wrong direction when parallelogram was out of working range
Check:
Use the joystick to move the joint in opposite direction.

50031: Command not allowed.

System parameters cannot be changed in MOTORS ON state.
Check:
Change to MOTORS OFF.

50032: Calibration command error

An attempt was made to calibrate while in MOTORS ON state.
Check:
Change to MOTORS OFF.

50033: Commutation command error

An attempt was made to commutate the motors in MOTORS ON state.
Check:
Change to MOTORS OFF.

50035: Synchronization error

An attempt was made to synchronize in MOTORS ON state.
Check:
Change to MOTORS OFF.

50036: Correct regain impossible

Correct regain impossible. A stop occurred with too many close points with corner zones. At restart the robot will move to a point farther forward in the program.
Check:
Reduce the number of close points, increase the distance between them or reduce the speed.

50037: MOTORS ON order ignored

MOTORS ON order ignored since the previous stop was not yet acknowledged.
Check:
Order MOTORS ON again.

50041: Robot in a singularity

The Robot is too close to a singularity.
Check:
During program execution, use SingArea instruction or joint interpolation.
During jogging, use axis by axis.

50042: System error

Check:
Increase the distance between close points and/or decrease speed and/or change acceleration value.

50050: Position outside reach

Position for IRB joint %.f
is outside working area.
Check:
Check the work object.
Check the joint working range.
Move the joint in joint coordinates.

50052: Joint speed error

The speed of joint %s is too high
relative the ordered speed
Check:
1. Check the tune parameters, external forces on the joint and hardware.
2. Reduce programmed speed.

50053: Revolution counter error

Too big difference between the counter
in the serial measurement board and
the expected value in the robot computer
for joint %s
Check:
Update the revolution counter
Replace serial measurement board

50055: Joint load error

Actual torque on joint %s is
higher than ordered.
Check:
May be caused by incorrect load data,
hardware error or to high acceleration.
1. Check load data
2. Check hardware
3. Reduce acceleration

50056: Joint collision error

Actual torque on joint %s is
higher than ordered while at low
or zero speed.
Check:
May be caused by jam error (the arm
has got stuck) or hardware error.

50057: Joint sync. error

The position of joint %s after
power failure is too far away from the
position before the power failure.
Check:
Make a new update of the revo-
lution counter.

50058: Tool coord. sys. error

The z-direction of the tool coordinate
system is almost parallel with the path
direction.
Check:
Change the tool coordinate system to
achieve at least 3 degrees deviation
between z-direction and path direction.

50059: Frame error

The definition of robot
fixed tool is not correct.
Check:
Check the tool and object data.

50060: Frame error

The definition of robot
fixed tool is not correct.
Check:
Check the tool and object data.

50061: Frame error

The definition of robot
fixed tool is not correct.
Check:
Check the tool and object data.

50062: Circle programming error

Start and end positions for the circle
are too close.

50063: Circle programming error

The circle position is too close to the
start or end position of the circle.

50065: Kinematics error

The destination of the movement is
outside the reach of the robot or too
close to a singularity.
Check:
Change the destination position.

50066: Robot not active

Attempt to coordinate motion or
calculate position of deactivated
robot %s.
Check:
Activate robot via the Motion Unit key,
then Jogging window, or program.
Check work object and program.

50067: Unit not active

Attempt to coordinate motion or
calculate position of deactivated
single unit %s.
Check:
Activate unit via Motion Unit key,
then Jogging window, or program.
Check work object and program.

50076: Orientation def. error

Orientation is incorrectly defined.
Check:
Make an accurate normalization of the quaternion elements.

50078: Too many close positions

Too many consecutive closely spaced positions.
Check:
Increase the distance between consecutive close positions.

50079: Wrist weaving not possible.

Check:
Use smaller weaving amplitude or a larger TCP.

50080: Position not compatible.

Position cannot be reached with the given robot configuration
Check:
Modify the robot position in the program.

50082: Deceleration limit

Calculation of joint deceleration time exceeds internal limits for this motion
Do not proceed without removing the causes of the error. See Check
Check:
Check deceleration of external axes.
Check noise level on I/O connections.
Increase Path resolution, Queue length.
Decrease program speed, and/or increase AccSet parameters (if below 100%).

50083: Speed lowered by system.

The speed has been lowered by the system due to dynamic limitations.
Check:
Decrease speed and/or do not use close positions at high speed and/or increase acceleration (if below 100%).

50085: Too many user frames.

For mech_unit %s more than one user frame has been defined.
Check:
Take away one user frame or define one more mech_unit.

50086: Singularity calc. error

Too close to wrist singularity with respect to numerical resolution for joint 4 of IRB.
Check:
Change destination position a few increments.

50087: Singularity problems.

Too close to wrist singularity with respect to numerical resolution for joint 6 of IRB.
Check:
Change destination position a few increments.

50088: Restart not possible.

It is not possible to restart the path due to a previous error.
Check:
Move the program start point and start a new movement.

50089: Lower weaving frequency

The weaving period length or
period time is too short.
Check:
Increase weave length or
increase period time.

50091: Restart not possible.

Restart no longer possible. Change of
unit state made restart of program
impossible.
Check:
Move the program pointer and start
a new movement.

50092: Axis computer comm. error

Incorrect response from axis computer
Check:
Check motion configuration parameters.
Check axis computer hardware.

50093: Load too large

The defined load mass is too large

50094: ServoTune not possible.

Tuning is not implemented for the
specified Joint.

50095: Cannot access joint.

Cannot access external joint. Check
configuration and activation of
external Joints.

50100: Manipulator error

There are more configuration or
numerical errors in motion domain.
Check:
Correct previous ones and try again.

50101: Manipulator config. error

%s'isnotfree'
for the param. %s''
in type %s'named'
%s'.'
Check:
Use another one.
For internal names, see moc_chk.log.

50102: Manipulator config. error

'%s' usedinthe'
parameter '%s' in'
type '%s' named'
'%s' is not'
defined.
Check:
Use another one that is defined or
define the used one.
For internal names, see moc_chk.log.

50103: Num. error in manipulator

The orientation defined by quaternions
including '%s' in'
the type '%s'named'
'%s' is not'
normalized.(SQRSUM =1)
Check:
Check the quaternions and/or recalculate
them.
For internal names, see moc_chk.log.

50104: Num. error in manipulator

The parameter '%s''
in type '%s' named'
'%s' is not '%s'.'
Check:
Check the value.
For internal names, see moc_chk.log.

50128: Manipulator error

Terminating the topic check for
manipulator due to earlier errors.
Check:
Correct the reported errors and run
topic check again.

50130: Synchronization failed.

Synchronization failed for joint
%s.
Check:
Make a new synchronization.
Restart System.

50131: Calibration failed.

Calibration failed for joint
%s.
Check:
Make a new calibration.
Restart System.

50132: Commutation failed.

Commutation failed for joint
%s.
Check:
Make a new commutation.
Restart System.

50133: Test signal error.

No test signals are available
for the master robot.

50134: Corr. vector warning

Sensor correction vector calculations
failed due to previous error.

50135: SoftAct not possible.

Soft servo is not possible to activate.

50136: SoftAct not possible.

Soft servo is not possible to modify.
during ramping.

50137: Fine point inserted

Corner zone is changed to fine point
Too many consecutive Move instructions
without fine point

50138: Arm check point outside

The robot has reached the limit for arm
check point
Check:
Use the joystick to move the involved
joint into the working range again

50139: Arm check point outside

Jogging was made in wrong direction when
arm check point was out of working range
Check:
Use the joystick to move the joint in
opposite direction.

50140: Payload too large

Heavy payload caused static torque
limit to be exceeded on joint %s
Check:
Check and reduce payload
for arm and/or wrist.
Reduce joint working range to decrease
static torque due to gravity.

50141: Speed, Zone or Jog error

1. Robot too close to singularity
2. MoveL to MoveJ corner zone error
3. Jogging error
4. High speed error

Check:

1. Move away from the singularity or run the program in joint coordinates
2. Use fine point or modify position
3. Try again
4. Reduce the programmed speed

50142: Manipulator config. error

Configuration of the manipulator failed.
Check:
Check the parameter values under
System parameters:Manipultor.

50143: Robot axes config. error

Actual configuration is not the same
as commanded configuration.
Check:
Use SingArea_Wrist or ConfL_Off
or modify position

50144: Displ frame uncertain.

Calibration of displ frame uncertain

1. Wrong TCP
2. Ref. points inaccurate
3. Ref. points badly spaced

Check:
If estimated error is unacceptable:

1. Verify that correct TCP is used.
2. Try more than 3 ref. points.
3. Be careful when positioning robot to ref. points.

50145: Kinematic limitation.

No solution obtained, possibly because of long segment or robot in a configuration with bad motion condition
Check:
Insert an intermediary point to reduce the length of the segment.

50146: Restart limitation

Corner path executed as a stop point. Power fail restart not possible near the stop point.
Check:
Use finepoint in the Move-instr before RestoPath, ActUnit, Wait or Stop-instr to make power fail restart possible.

50147: Power fail restart failed

Re-creation of the path failed
Check:
Move the start point and start a new movement.

50148: MOC_WRONG_MAIN_ISR_TYPE

Error when trying to call a non existing interrupt routine in the main computer from the axis computer.

50149: MOC_SCHED_QUEUE_FULL

Error when the scheduler queue in the axis computer is full.

50150: MOC_WRONG_CMD_TYPE

Error when the axis computer have received a command from the main computer that is not supported.

50151: MOC_MAILBOX1_ERROR

The axis computer driver failed
to generate a new mailbox 1 interrupt
since the previous interrupt has
not been serviced properly.

50152: MOC_MAILBOX2_ERROR

The axis computer driver failed
to generate a new mailbox 2 interrupt
since the previous interrupt has
not been serviced properly.

50153: Command not allowed

The given instruction, or command, was
not allowed since the robot program was
executing in a hold state.
Check:
Modify program or stop program execution
before issuing command.

50155: Power fail restart failed

Not possible to restart the Move-instr
before RestoPath, ActUnit, Wait or
Stop-instr
Check:
Make program free from MOTION WARNING
50146 Restart limitation, by changing
the Move-instr to finepoint
Move the start point and start
a new movement.

8 Operator error messages

60001: %s missing

Tool %s is not used in
current program.
Maybe because it has been deleted or
it is not defined.
Check:
Change to another tool using the
Jogging window.

60002: %s missing

Wobj %s is not used in
current program.
Maybe because it has been deleted or
it is not defined.
Check:
Change to another workobject using
the Jogging window.

60003: Directory not created!

The directory %s cannot be created.
Probably, because directory already
exists or the disk is write-protected.
Check:
Check if directory exists or if disk
is write-protected.
Check also if space on disk is enough.

60004: Robot Hold confusion!

The used tool and the used work object
cannot both, in the same time, be hold
by robot or be stationary.
Check:
Check the robhold component of the
used tool and work object.

60005: %s missing!

The workobject %s contains
a coordinated mechanical unit which
cannot be found.
Check:
Check the mechanical unit component of
the workobject.

60006: %s Userframe!

The workobject %s contains
a coordinated mechanical unit which
has no defined userframe.
Check:
Check the mechanical unit component of
the workobject.

60007: Jogging not permitted!

Jogging cannot be done in this mode.
Check:
Release the joystick and enabling
device and repeat.
Check also active mechanical unit.

60008: Tool mass undefined!

Jogging cannot be done if the used tool
has an undefined mass
Check:
Enter a value for the mass, into the
tooldata for the used tool.

60009: Unsynchronized robot!

The robot or external axis are
unsynchronized.
Check:
Synchronize robot or external axis.

60010: Orientation error!

Orientation in %s is unnormalized.
Check:
Check orientation value.

60011: Parameter faults!

Loading of parameters in
%s
cannot be fulfilled.
For reason, see
%s
Check:
Copy the file
%s
to a floppy and examine reasons
using an ordinary text editor!

60012: No Parameters loaded!

There are no parameters in
%s
Check:
Check the file %s
using an ordinary text editor!

60013: Jogging not permitted!

Jogging of mechanical unit is
not possible.
Unit is not activated.
Check:
Activate the mechanical unit.

60014: Disk is full!

No info is saved in Change Log about
the parameter change because no space
available on disk.
Check:
Try to delete files or
reorganize your disk.

60015: PP cannot be set!

PP cannot be set to routine
%s'be cause it has parameters.'
Check:
Make a routine which call %s'or'
remove the parameters.

60016: PP cannot be set!

PP cannot be set to routine
%s'because it resides in a'
module which has NOSTEPIN as
module attribute.
Check:
Copy the routine '%s' to'
another module or change the
module attribute.

60017: PGM_TELLBACK code %d

Check:
No more information available.

60018: RAPID syntax error!

The program cannot be loaded because of
syntactical error(s).
Check:
A RAPID syntax check program for the PC
or QuickTeach can be used to detect the
error(s). The file PGMCPL1.LOG on the
internal RAM disk contains information
about the error(s

60019: Data input error!

The component %s'indata'
type %s'is not correct.'
The limits are
%s!
Check:
Check data and enter the correct
value.

60020: PP cannot be set!

PP cannot be set to routine
'%s' because it is defined as'
a trap routine.
Check:
Change the definition for the
routine '%s"
to 'Procedure''

9 IO & Communication error messages

71000: Bus name invalid

Description Reason:
- Driver %s: has an invalid bus name

Check:
1. Change the busname for the driver

71001: Duplicated address

Description Reason:
- Same address for unit %s and %s

Check:
1.Check the address
2.Check the bus

71002: Invalid driver

Description Reason:
- Unit %s: has an unspecified driver

Check:
1.Check the drivers against the one specified for the unit

71003: Invalid unit

Description Reason:
- The unit specified for the signal %s is not specified in the unit section

Check:
1.Change the name of the unit
2.Add a new unit to the unit list

71004: Invalid signal length

Description Reason:
- The length of the digital signal %s must be 1

Check:
1.Change the length to 1 or remove the statement.

71005: Filter time invalid

Description Reason:
- Signal %s: The passive filter time should be 0 or %d - %d ms

Check:
1.Change the filter time

71006: Filter time invalid

Description Reason:
- Signal %s: The active filter time should be 0 or %d - %d ms

Check:
1.Change the filter time

71007: Logical value out of range

Description Reason:
- Signal %s: Logical Max is less or equal to Logical Min

Check:
1.Correct the values to be max greater than min

71008: Phys. value out of range

Description Reason:
- Signal %s: Physical Max is less or equal to Physical Min

Check:
1.Correct the values to be max greater than min

71009: Type invalid

Description Reason:
- Signal %s: the type of signal is invalid

Check:
1.Change the type

71010: Signal out of range

Description Reason:
- Signal %s: the physical signal number + length -1 is > %d

Check:
1.Change the physical signal number
2.Change the length

71011: Driver not supported

Description Reason:
- The driver %s is not supported

Check:
1. Change the name of the driver

71012: Memory overflow

Description Reason:
- Board %s: Too many boards for specified driver type

Check:
1. Change number of boards for the driver at driver configuration.

71013: Wrong type of board

Description Reason:
- Wrong type of board connected to address %d

Check:
1. Check the board type at given address

71014: Board missing

Description Reason:
- No board connected at given address %d

Check:
1. Connect a board to the slot
2. Change the board address

71015: Digital Input overflow

Description Reason:
- Number of digital input channels for board %s is greater than %d

Check:
1. Reduce the number digital inputs

71016: Digital Output overflow

Description Reason:
- Number of digital output channels for board %s is greater than %d

Check:
1. Reduce the number of digital outputs

71017: No activate signal

Description Reason:
- Missing activate signal for cross

Check:
1. One activate signal must be given

71018: Activate signal overflow

Description Reason:
-Number of activate signals for cross too high

Check:
1. Only one activate signal must be given

71019: Missing signal definition

Description Reason:
-The signal: %s, at cross is not defined

Check:
1. Define the signal name in signal section

71020: No result signal

Description Reason:
- Missing result signal
Check:
1. At least one result signal must be given

71021: Duplicate cross signals

Description Reason:
- The signal: %s, appears both as FROM and as TO.
Check:
1. The same signal can not be given for both FROM and TO

71022: Physical max too high

Description Reason:
- Signal: %s
- The physical max value > %d
Check:
1. Change value in configuration

71023: Physical min too low

Description Reason:
- Signal: %s
- The physical min value < %d
Check:
1. Change value in configuration

71024: Physical value too high

Description Reason:
- Signal: %s
- Current value = %d > Maxvalue = %d
- Value set to Maxvalue
Check:
1. Change physical max value in configuration

71025: Physical value too low

Description Reason:
- Signal: %s
- Current value = %d < Minvalue = %d
- Value set to Minvalue

Check:
1. Change physical min value in configuration

71026: Logical value too high

Description Reason:
- Signal: %s
- Current value = %d > Maxvalue = %d
- Value set to Maxvalue

Check:
1. Change logical max value in configuration

71027: Logical value too low

Description Reason:
- Signal: %s
- Current value = %d < Minvalue = %d
- Value set to Minvalue

Check:
1. Change logical min value in configuration

71028: Config. out of range

Description Reason:
- The RIO starting quarter and rack size is out of range for board %s

Check:
1. For starting quarter 0 rack size must be less than 4

71029: Config. out of range

Description Reason:
- The RIO starting quarter and rack size is out of range for board %s

Check:
1. For starting quarter 1 rack size must be less than 3

71030: Config. out of range

Description Reason:
- The RIO starting quarter and rack size is out of range for board %s

Check:
1. For starting quarter 2 rack size must be less than 2

71031: Config. out of range

Description Reason:
- The RIO starting quarter and rack size is out of range for board %s

Check:
1. For starting quarter 3 rack size must be 0

71032: Communication fail

Description Reason:
- The RIO board has lost communication with the PLC at board address %d

Check:
1. Check the communication cable to PLC
2. Check of if the PLC is switched off

71033: Digital input out of range

Description Reason:
- The number of digital inputs is
  out of range at board address %d
  max inputs are %d

Check:
1. Change the configuration for
   the board

71034: Digital output out of range

Description Reason:
- The number of digital outputs is
  out of range at board address %d
  max outputs are %d

Check:
1. Change the configuration for
   the board

71035: Starting quarter out of range

Description Reason:
- The starting quarter is
  out of range for board %s

Check:
1. The starting quarter must be within
   the values 0 to 3. change the config
   file.

71036: Name out of range

Description Reason:
- The number of characters in
- name %s
- is greater than %d characters or
- the name is missing.

Check:
1. Give a new name that fits within
   the limits.

71037: IO Cross connection fault

Description Reason:
- The signal %s appears on both
FROM and TO in the same chain
Check:
1. Correct the configuration for the
cross connections where the signal above
is connected.

71038: IO Cross depth to high

Description Reason:
- The Cross connection in the same chain
- is too deep.
- First signal name: %s
Check:
1. Make the Cross connection less deep.

71039: Max instances out of range

Description Reason:
- The max number of instances for
- driver %s is out of range.
Check:
1. Make sure that the number of
instances is greater than 0,
and not more than number of IO slots.

71040: RIO link address out of range

Description Reason:
- The RIO link address for board
- %s is out of range.
Check:
1. Make sure that the RIO link address
is greater than 0, and less than 64.

71041: Analog output overflow

Description Reason:
- Number of analog output for
- board, %s is greater than %d.
Check:
1. Reduce the number of analog outputs.

71042: Analog inputs overflow

Description Reason:
- Number of analog inputs for
- board, %s is greater than %d.
Check:
1. Reduce the number of analog inputs.

71043: Signal type error

Description Reason:
- The type specified for signal %s
cantbeconnectedtospecifiedboard'
Check:
1. Change to another type.
2. Change to another board.

71044: Physical signal overflow

Description Reason:
- The range of phsig, or length, or
phsig and length for signal %s is
greater than %d
Check:
1. Change the physical signal number
2. Change the length.

71045: Filter specification err.

Description Reason:
- Signal %s : No filter time can be
specified for this type of signal.
Check:
1. Set filter time to 0 or remove the
statement.

71046: Scaling error

Description Reason:
- Signal %s: No scaling can be done.
Check:
1. Remove the scaling statements.

71049: Parameter Invert error

Description Reason:
- Signal %s: This type of signal
cantbeinverted.'
Check:
1. Only digital signals can be inverted.

71050: Cross signal not digital.

Description Reason:
- Signal %s: Is not a digital signal
Check:
1. Only digital signals can be cross.
connected.

71051: Link address not octal.

Description Reason:
- Signal %s: The RIO address is not in
octal form
Check:
1. Reenter a new address in octal form.

71052: Cross table full.

Description Reason:
- The sum of different FROM signals
added with total sum of TO signals
must not exceed %d
Check:
1. Reduce the number of signals.

71053: RIO connection down

Description Reason:
- CantaccessRIOboarddueto'
communication with PLC is down
Check:
1. Check the communication cable to PLC
2. Check if the PLC is switched off

71054: Wrong signal type

Description Reason:
- Signal %s:
 The type of signal is wrong

Check:
1. Change the type

71055: Invalid signal name

Description Reason:
- Symbol %s: is not defined

Check:
1. Change the symbol name above

71072: No save set on signal

Description Reason:
- Signal %s
 has not Set the Store attribute to YES

Check:
1. Set the Store attribute.

10 Arcweld error messages

11001: Gas supervision

Check:
Check the welding equipment.

110002: Water supervision

Check:
Check the welding equipment.

110003: Arc supervision

Check:
Check the welding equipment.

110004: Voltage supervision

Check:
Check the welding equipment.

110005: Current supervision

Check:
Check the welding equipment.

110006: Wirefeed supervision

Check:
Check the welding equipment.

110007: Wirestick supervision

Check:
Check the welding equipment.

110008: Arc ignition failed

Check:
Check the welding equipment.

110009: Weld schedule transfer error

Check:
Define a weld schedule strobe input

110010: Weld schedule transfer error

Check:
The schedule port was busy with previous transfer.

110011: Process stopped

Check:
Process was stopped by digital input.

110012: Arc fill ignition failed

Check:
Check the welding equipment.

111000: Weave pattern error

Weave interpolation type error
[Geometric = 0, Rapid = 1]
Check:
Adjust weave parameters

111001: Weave pattern error

Weave pattern shape error
[No shape = 0, Zig-zag shape = 1]
[V-shape = 2, Triangular shape = 3]
Check:
Adjust weave parameters

111002: Weave pattern error

Weave pattern cycle length error
(0 - 1) [m]
Check:
Adjust weave parameters

111003: Weave pattern error

Weave pattern cycle time error
(0 - 100) [s]
Check:
Adjust weave parameters

111004: Weave pattern error

Weave pattern width error
(0 - 1) [m]
Check:
Adjust weave parameters

111005: Weave pattern error

Weave pattern height error
(0 - 1) [m]
Check:
Adjust weave parameters

111006: Weave pattern error

Weave pattern left dwell error
(0 - 1) [m]
Check:
Adjust weave parameters

111007: Weave pattern error

Weave pattern center dwell error
(0 - 1) [m]
Check:
Adjust weave parameters

111008: Weave pattern error

Weave pattern right dwell error
(0 - 1) [m]
Check:
Adjust weave parameters

111009: Weave pattern error

Weave pattern bias error
(-1 - 1) [m]
Check:
Adjust weave parameters

111010: Weave pattern error

Weave pattern direction angle error
(-PI/2 - PI/2) [rad]
Check:
Adjust weave parameters

111011: Weave pattern error

Weave pattern tilt angle error
(-PI/2 - PI/2) [rad]
Check:
Adjust weave parameters

111012: Weave pattern error

Weave pattern rotation angle error
(-PI/2 - PI/2) [rad]
Check:
Adjust weave parameters

111013: Weave pattern error

Weave pattern horizontal offset error
(-1 - 1) [m]
Check:
Adjust weave parameters

111014: Weave pattern error

Weave pattern vertical offset error
(-1 - 1) [m]
Check:
Adjust weave parameters

111015: Weave pattern error

Weave pattern sync condition left error
(0 - 100) [%]
Check:
Adjust weave parameters

111016: Weave pattern error

Weave pattern sync condition right error
(0 - 100) [%]
Check:
Adjust weave parameters

111017: Weave pattern error

Forbidden combination of bias and shape
Bias only allowed for Zig-zag shape
Check:
Adjust weave parameters

111018: Weave pattern error

Forbidden combination of bias and width
Bias must be less than half the width
Check:
Adjust weave parameters

111019: Weave pattern error

Forbidden combination of dwells and cycle length
Dwells must be less than cycle length
Ramp slope (amplitude/length) is limited
Check:
Adjust weave parameters

113000: Equipment cofiguration error

Check:
AW and EIO configurations do not match

114000: Weldguide error

Check:
Check weldguide parameters and equipment

115000: Seamless Integration error

Check:
Weld data not updated

115001: Seamless Integration error

Check:
Weld data changed

115002: Seamless Integration error

Check:
Incorrect transmission length

115003: Seamless Integration error

Check:
Non existing parameter

115004: Seamless Integration error

Check:
Unit type missmatch in CFG

115005: Seamless Integration error

Check:
Selection type missmatch in CFG

116000: Track error

Check:
Check joint definition

116001: Track start error

Check:
Check joint definition

116002: Track max path correction error

Check:
Check joint definition

11 Spotweld error messages

12001: Spot weld system error

Spot weld proc not idle
Check:
Set the process state defined by SwInit to idle

12002: Spot weld system error

Parameter

12003: SwStart Timeout negative

12004: SwInit Interrupt negative

12005: ProcId. The reason is either:

-ProcId does not correspond to the value given from SwInit
-The spot weld process has been cancelled

CONTENTS

Sheet 1
Cont 2.1

List of contents

Sheet 2.1 Cont 2.2

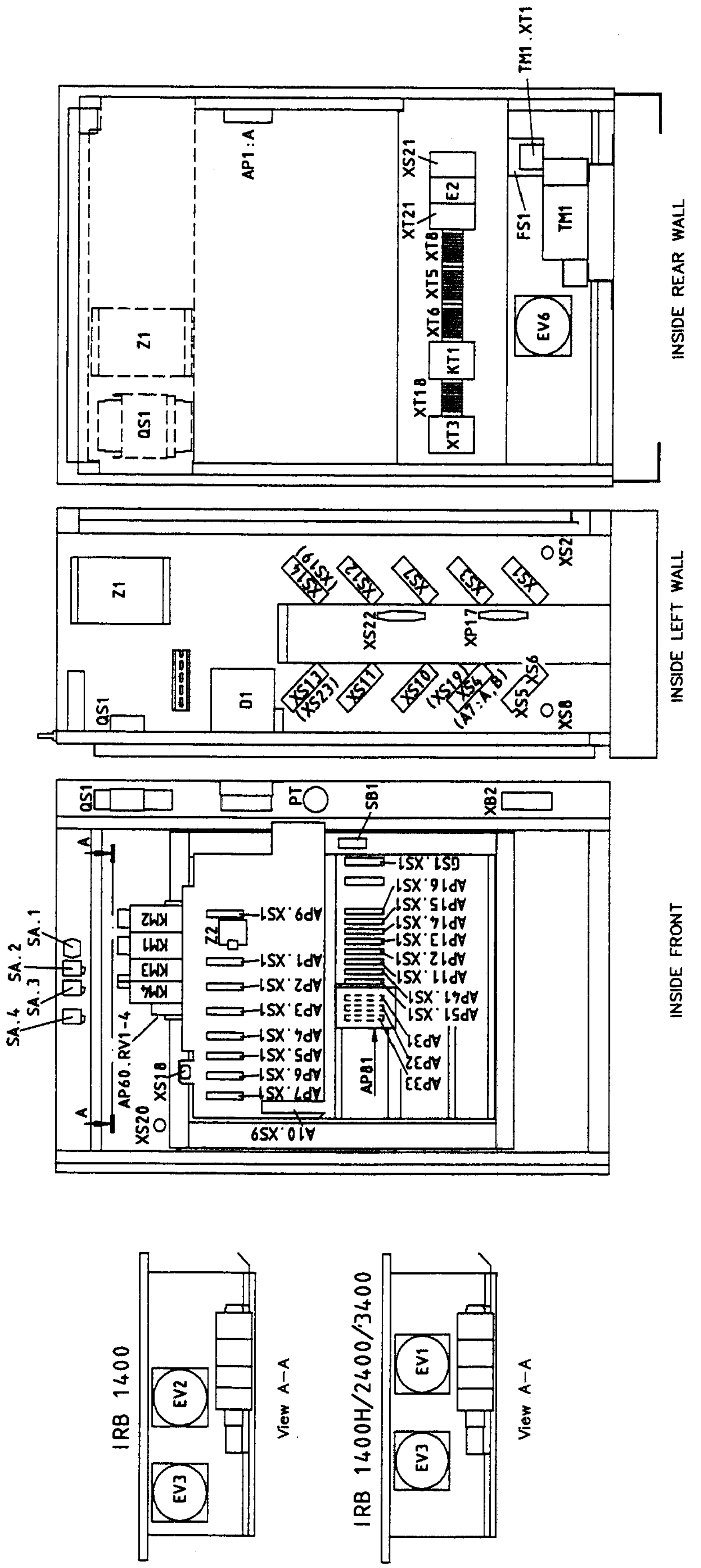

View of control cabinet, small size (opt. 111)

Sheet	Cont
2.2	3

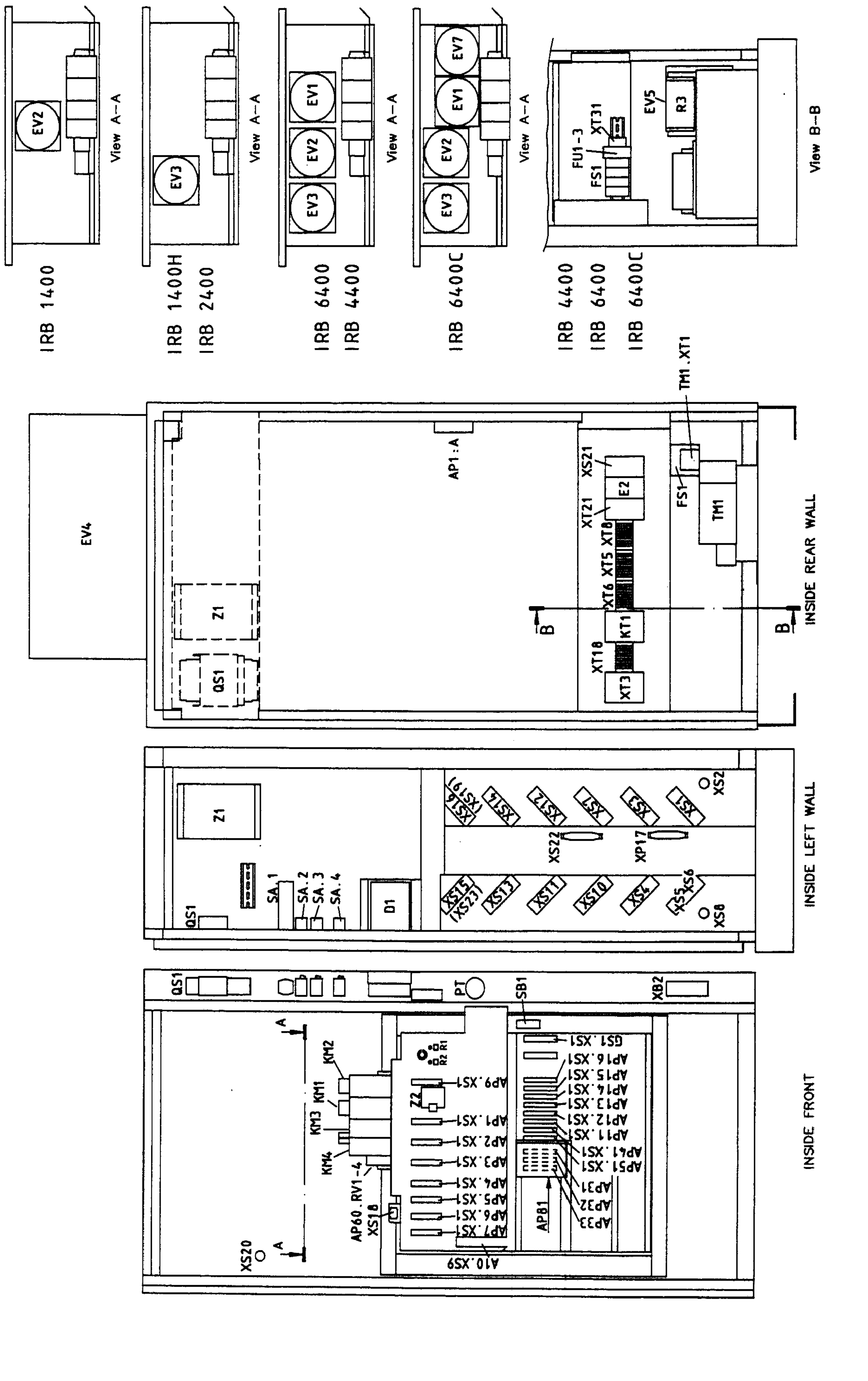

View of control cabinet, large size (opt. 112)

A	Power unit
A7:A	ABB ESAB Connection
A7:B	ABB ESAB Connection
AP1:A	ABB ESAB Connection
AP1	Drive unit axis 1/1,3,5
AP2	Drive unit axis 2/2,4,6
AP3	Drive unit axis 3
AP4	Drive unit axis 4/4-6
AP5	Drive unit axis 5
AP6	Drive unit axis 6
AP7	Drive unit axis 7
AP9	DC-link Drive system
AP10	Drive unit back plane
AP11	Analogus I/O, Combi I/O, Dig I/O no 1
AP12	Remote I/O, Digital I/O no 2
AP13	Remote I/O, Digital I/O no 3
AP14	Remote I/O, Digital I/O no 4
AP15	Remote I/O, Digital I/O no 5
AP16	Remote I/O, Digital I/O no 6
AP21	Relay output no 1
AP22	Relay output no 2
AP23	Relay output no 3
AP24	Relay output no 4
AP25	Relay output no 5
AP26	Relay output no 6
AP31	Robot computer
AP41	System board
AP51	External axes board
AP60	Varistor and diode unit
AP61	Serial measurement board
AP61.GB	SMB battery
AP80	Back plane
AP80.F1-4	PTC Resistor Fuse
AP80.X2	Floppy disc signal
AP80.X22	Floppy disc power
AP80.X5	Data ports, SIO 1-4
AP80.X31	Measurement system
AP80.X32	Programming unit
AP80.X34	Control panel
AP80.X35	System board, customer

D1	Floppy disc unit
E2	Earth fault breaker
EL	Illumination
EV1	FAN, Drive system IRB 1400H/2400/3400/6400/6400C
EV2	FAN, Drive system IRB 1400/6400/6400C
EV3	FAN, Drive system IRB 1400-6400/6400C
EV4	Cooling device
EV5	Main transformer fan, IRB 6400
EV6	Back fan, Small cabinet size
EV7	FAN, Drive system IRB 6400C
FS1	Automatic Fuse, drive system
FS2	Automatic Fuse, Mains voltage
FS3	Automatic Fuse, Service outlet
GB1	Battery
GB2	Battery
GS1	Power supply
KM1	Motor on contactor 1
KM2	Motor on contactor 2
KM3	Supervision contactor
KM4	Brake contactor
KT1	Time delay, contactor
PT	Duty time counter
QS1	Mains switch
R1, R2	Resistors, DC-link
R3	Brake resistor IRB 6400
RV1	Varistor, Motor on contactor 1
RV2	Varistor, Motor on contactor 2
RV4	Varistor, Brake contactor
SA	Control panel
SA.1	Mode switch
SA.2	Motor on, PB
SA.3	Motor off PB
SA.4	Emergency stop PB
SB1	Door switch drive system fan
SB2	Door switch, Heat exchanger, Air conditioning
SB3	Door switch illumination
TM1	Transformer, Mains
TM1.FU1-3	Fuse
TM1.ST	Temperature sensor, transformer
TM2	Transformer, Service outlet
V1	Diode duty time counter
V3	Diode supervision contactor
XB1	Computer link
XB2	Print out

XP0	Mains Plug
XP5	Customer signal connection
XP6	Customer power connection
XP17	Mode switch customer extension
XP18	PTC, Brake extension
XP19	External control panel connection
XP22	External axes, control signals extension
XS1	Outlet control cable power
XS2	Outlet control cable signal
XS3	Customer connection
XS4	External axes signal connection, Axes board
XS5	Customer signal connection
XS6	Customer power connection
XS7	External axis power connection
XS8	Position indicator
XS10	Analogus I/O, Combi I/O Analog part
XS11	Digital I/O no 1
XS12	Digital I/O no 2
XS13	Digital I/O no 3
XS14	Digital I/O no 4
XS15	Digital I/O no 5
XS16	Digital I/O no 6
XS17	Mode switch customer extension
XS18	PTC, Brake extension
XS19	External control panel connection
XS20	Programming unit outlet
XS21	Service 230V outlet
XS22	External axes, control signal extension
XS23	External axes signal connection, SMB
XT3	Customer connection
XT5	Customer signal connection
XT6	Customer power connection
XT8	Position indicator
XT10	Analogus I/O, Combi I/O analog part
XT11	Digital I/O no 1
XT12	Digital I/O no 2
XT13	Digital I/O no 3
XT14	Digital I/O no 4
XT15	Digital I/O no 5
XT16	Digital I/O no 6
XT17	Remote I/O board
XT18	I/O supply
XT21	Service outlet connection.
XT26	Direct supply connection
Z1	Mains Filter
Z2	Filter Lim. Switch robot

Sheet 3

Cont 4

Designation

Sheet	Cont
4	5

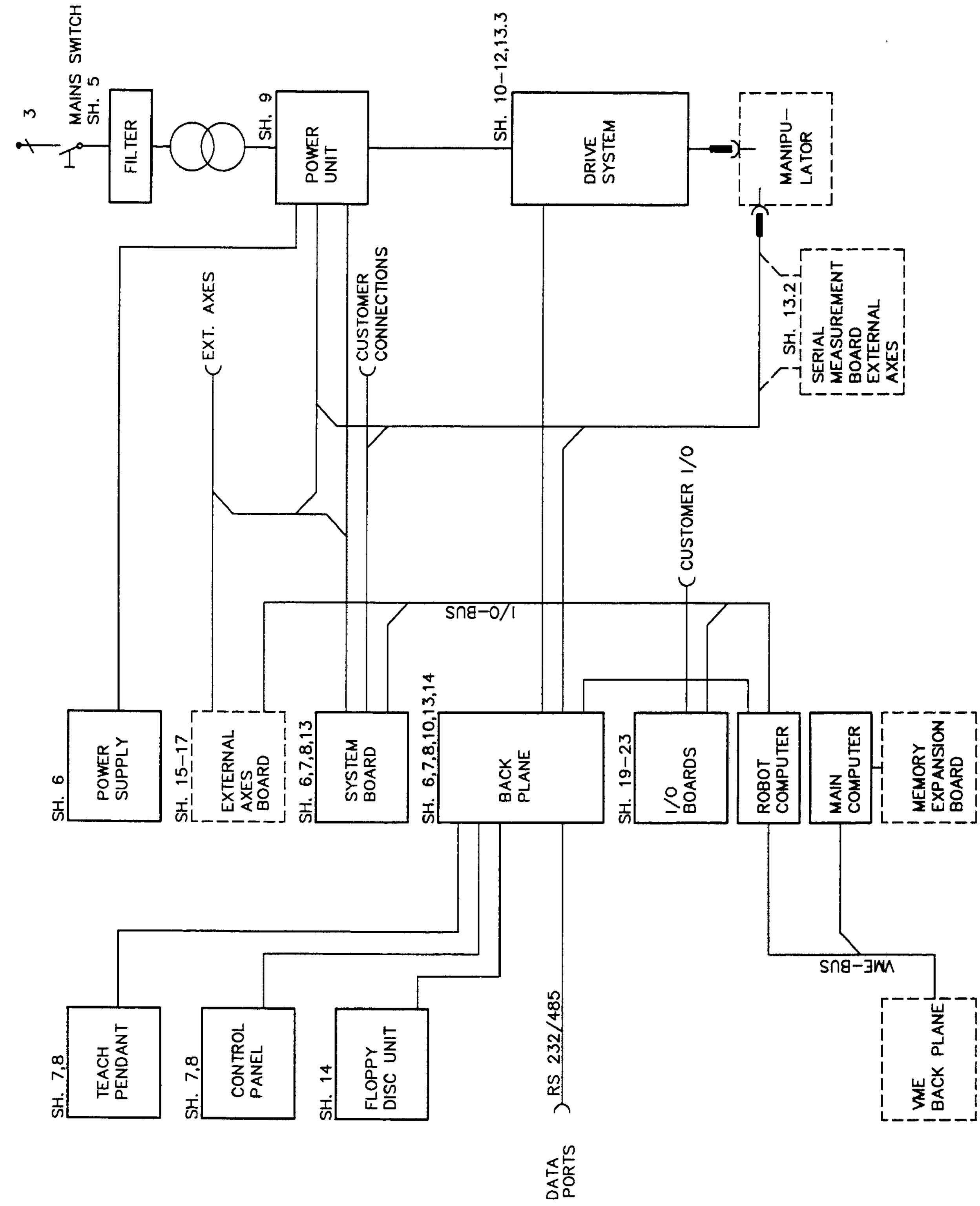

Block diagram

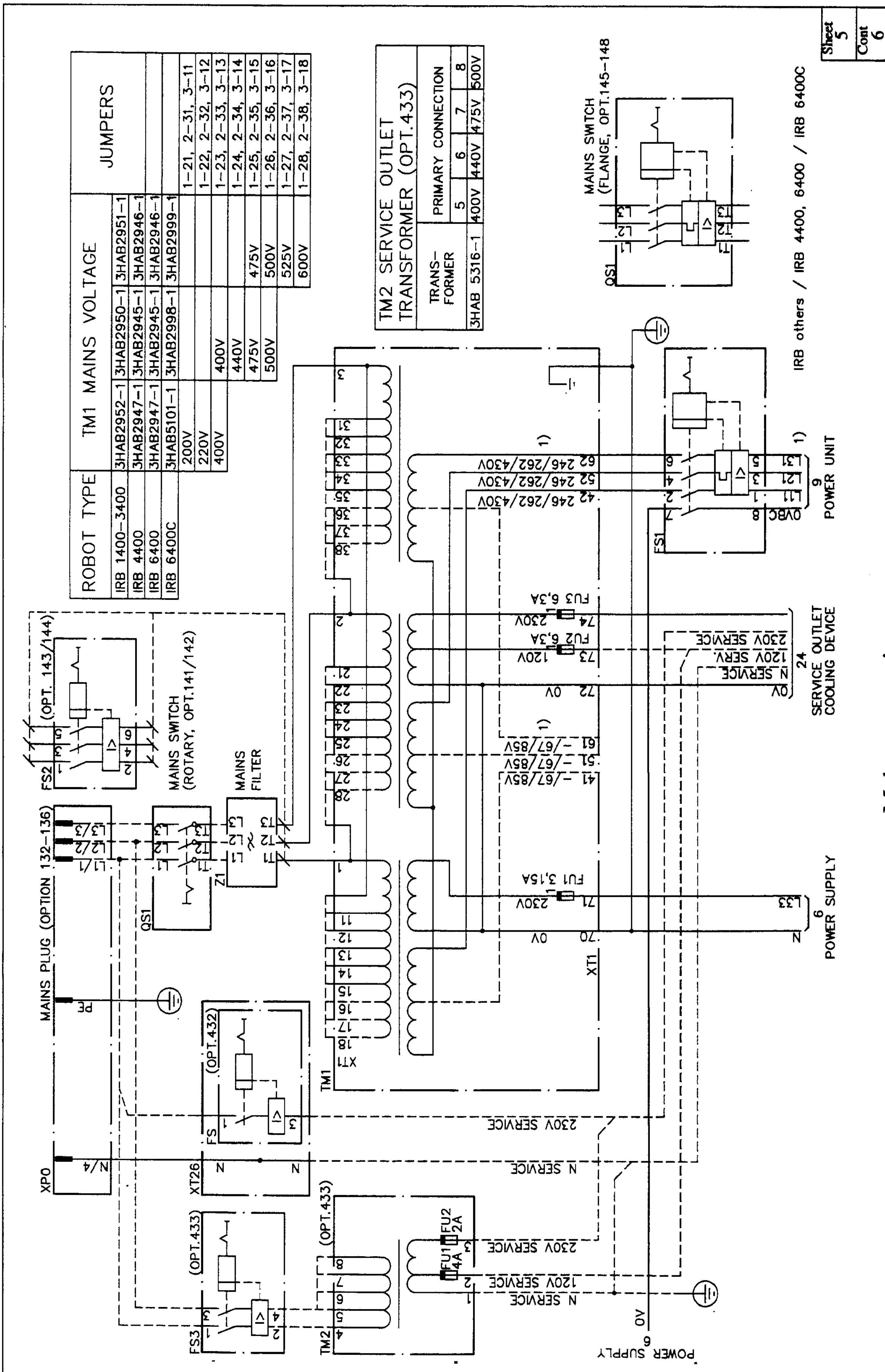

ROBOT TYPE	TM1 MAINS VOLTAGE			JUMPERS
IRB 1400-3400	3HAB2952-1	3HAB2950-1	3HAB2951-1	
IRB 4400	3HAB2947-1	3HAB2945-1	3HAB2946-1	
IRB 6400	3HAB2947-1	3HAB2945-1	3HAB2946-1	
IRB 6400C	3HAB5101-1	3HAB2998-1	3HAB2999-1	
	200V			1-21, 2-31, 3-11
	220V			1-22, 2-32, 3-12
	400V	400V		1-23, 2-33, 3-13
		440V		1-24, 2-34, 3-14
		475V	475V	1-25, 2-35, 3-15
		500V	500V	1-26, 2-36, 3-16
			525V	1-27, 2-37, 3-17
			600V	1-28, 2-38, 3-18

TM2 SERVICE OUTLET TRANSFORMER (OPT.433)

TRANS-FORMER	PRIMARY CONNECTION			
	5	6	7	8
3HAB 5316-1	400V	440V	475V	500V

Mains connection

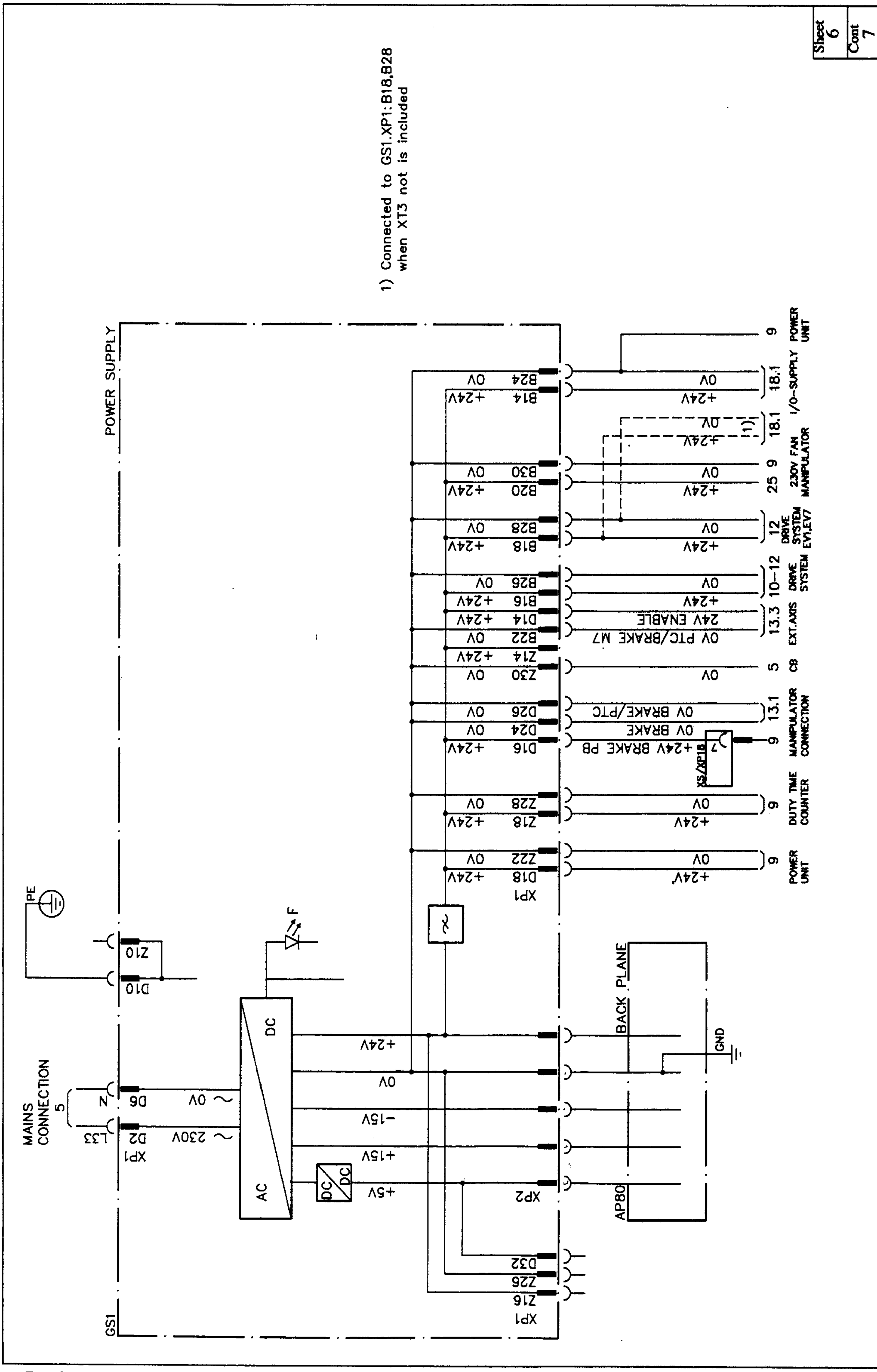

Power supply

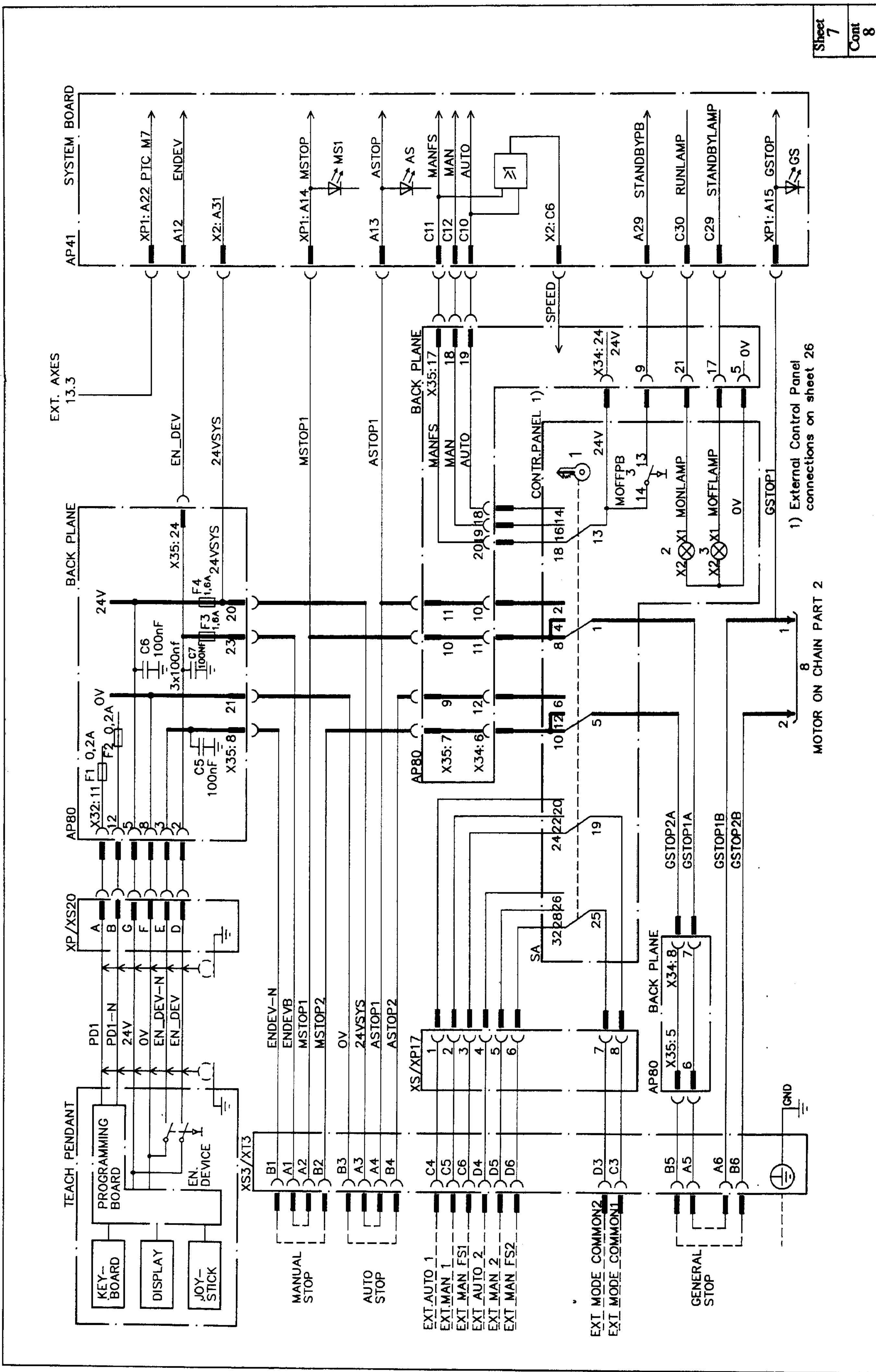

MOTOR ON- chain part 1

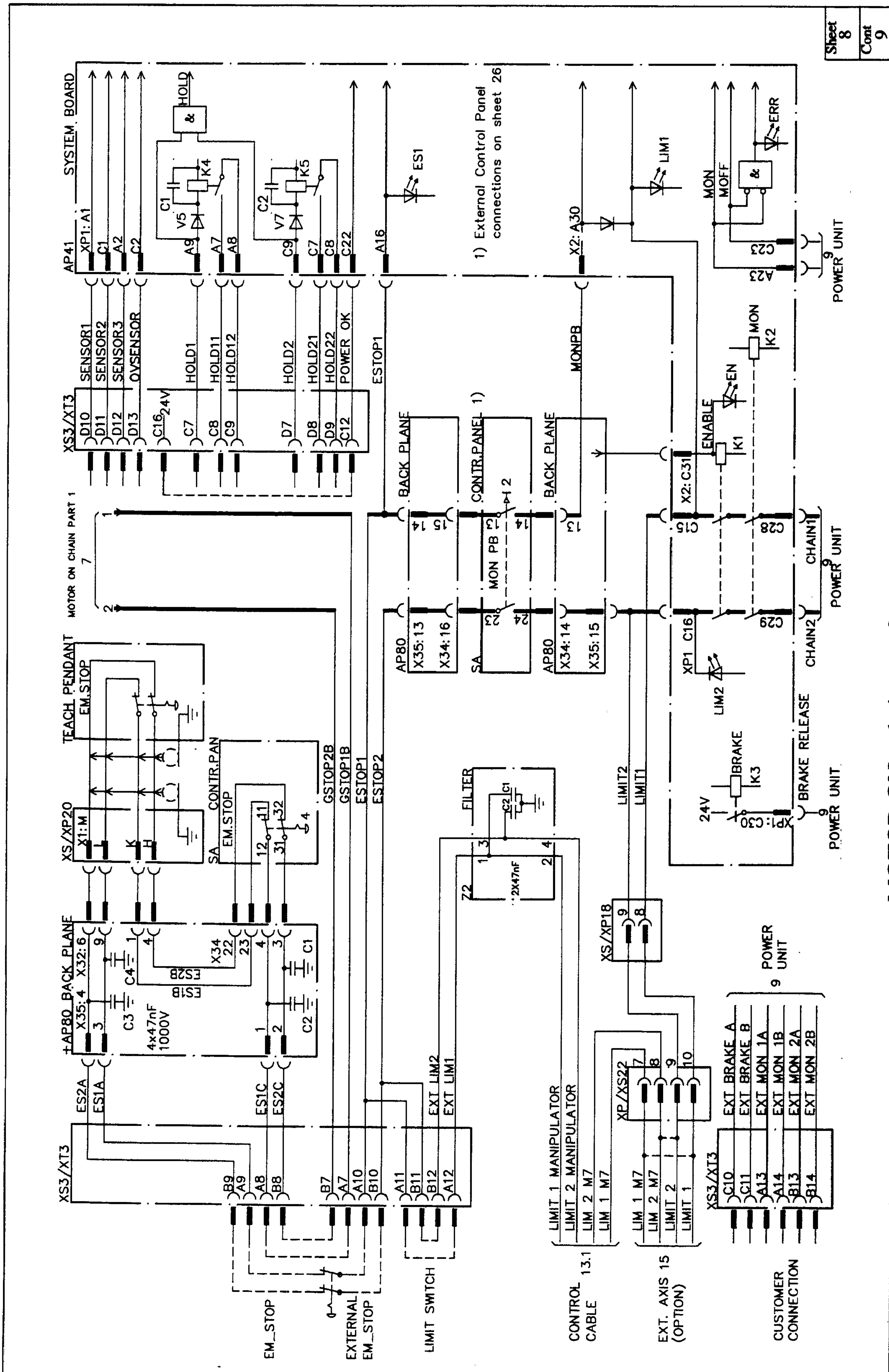

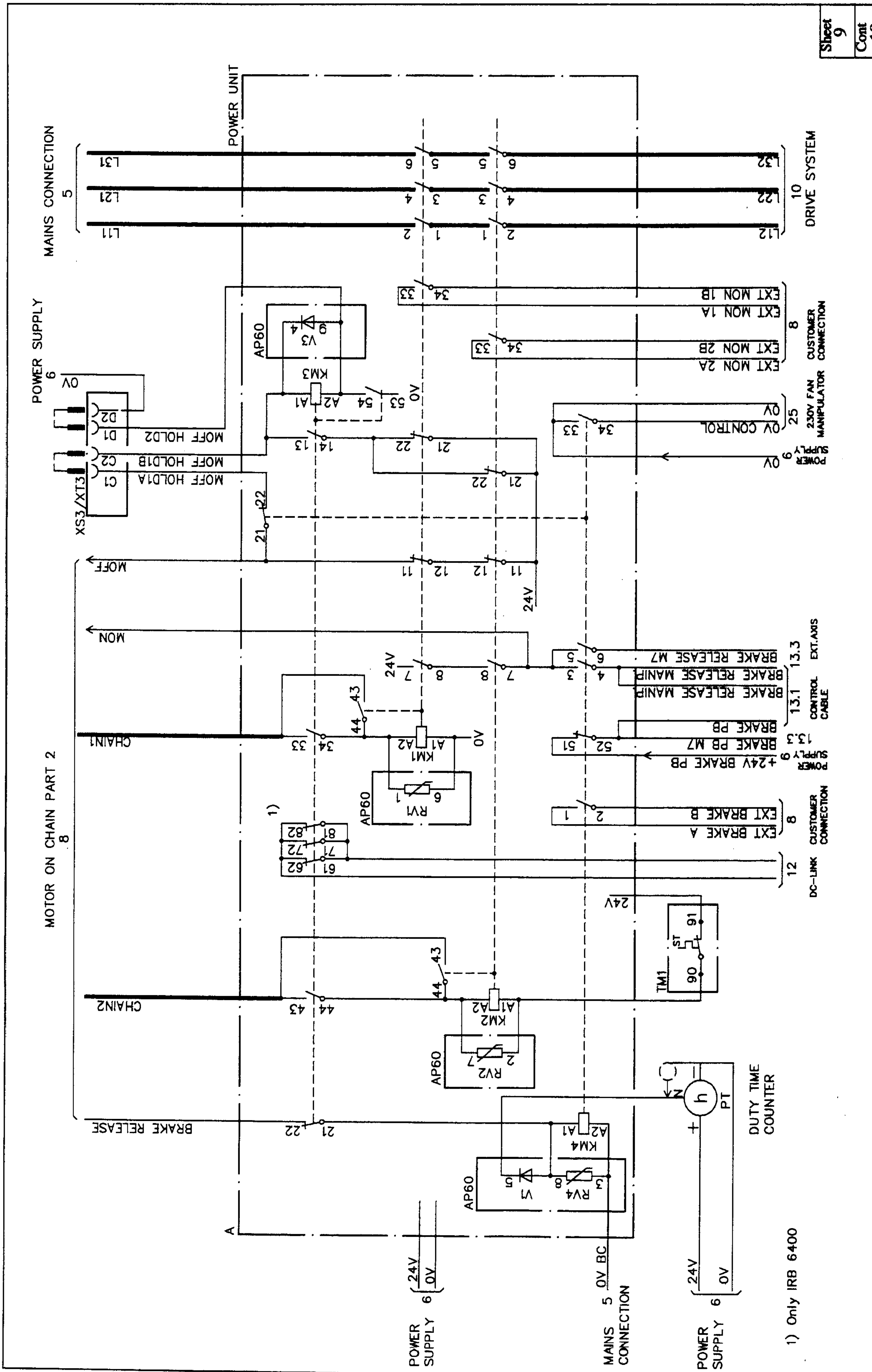
Sheet 9
Cont 10
POWER UNIT
MAINS CONNECTION 5
L11
L21
L31
L12
L22
L32
10 DRIVE SYSTEM
POWER SUPPLY 6
0V
XS3/XT3
MOFF HOLD1A
MOFF HOLD1B
MOFF HOLD2
AP60
V3
KM3
EXT MON 1B
EXT MON 1A
EXT MON 2B
EXT MON 2A
8 CUSTOMER CONNECTION
0V
0V CONTROL
25 230V FAN MANIPULATOR
6 POWER SUPPLY
MOFF
24V
MON
BRAKE RELEASE M7
BRAKE RELEASE MANIP
BRAKE RELEASE MANIP
13.3 EXT.AXIS
13.1 CONTROL CABLE
CHAIN1
KM1
RV1
BRAKE PB
BRAKE PB M7
+24V BRAKE PB
EXT BRAKE B
EXT BRAKE A
12 DC-LINK
MOTOR ON CHAIN PART 2 8
CHAIN2
KM2
RV2
TM1
ST
BRAKE RELEASE
KM4
RV4
V1
DUTY TIME COUNTER
PT
POWER SUPPLY 6 24V 0V
MAINS CONNECTION 5 0V BC
POWER SUPPLY 6 24V 0V
1) Only IRB 6400

Power unit

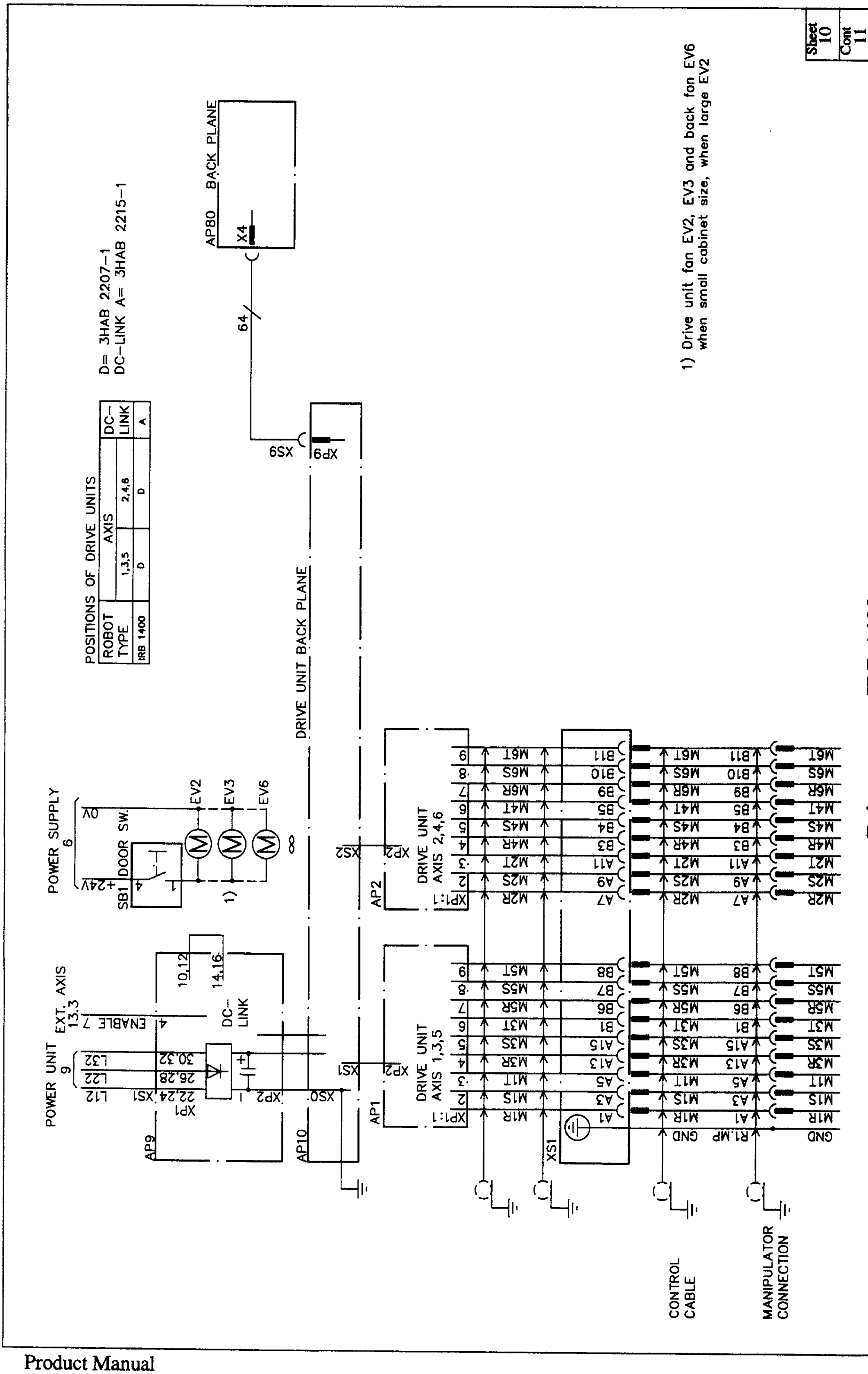
Sheet 10
Cont 11
1) Drive unit fan EV2, EV3 and back fan EV6 when small cabinet size, when large EV2
AP80 BACK PLANE
X4
64
D= 3HAB 2207-1
DC-LINK A= 3HAB 2215-1
POSITIONS OF DRIVE UNITS
ROBOT TYPE
AXIS
1,3,5
2,4,6
DC-LINK
IRB 1400
D
D
A
XS9
XP9
DRIVE UNIT BACK PLANE
POWER SUPPLY 6
+24V
0V
SB1 DOOR SW.
EV2
EV3
EV6
1)
POWER UNIT 9
EXT. AXIS 13.3
ENABLE 7
DC-LINK
L12
L22
L32
XS1
XP1
22,24
26,28
30,32
10,12
14,16
XP2
XS0
AP9
AP10
AP1
AP2
DRIVE UNIT AXIS 1,3,5
DRIVE UNIT AXIS 2,4,6
XP1:1
XS1
XP2
XS2
M1R M1S M1T M3R M3S M3T M5R M5S M5T
M2R M2S M2T M4R M4S M4T M6R M6S M6T
A1 A3 A5 A13 A15 B1 B6 B7 B8
A7 A9 A11 B3 B4 B5 B9 B10 B11
GND
R1.MP
CONTROL CABLE
MANIPULATOR CONNECTION
Drive system IRB 1400

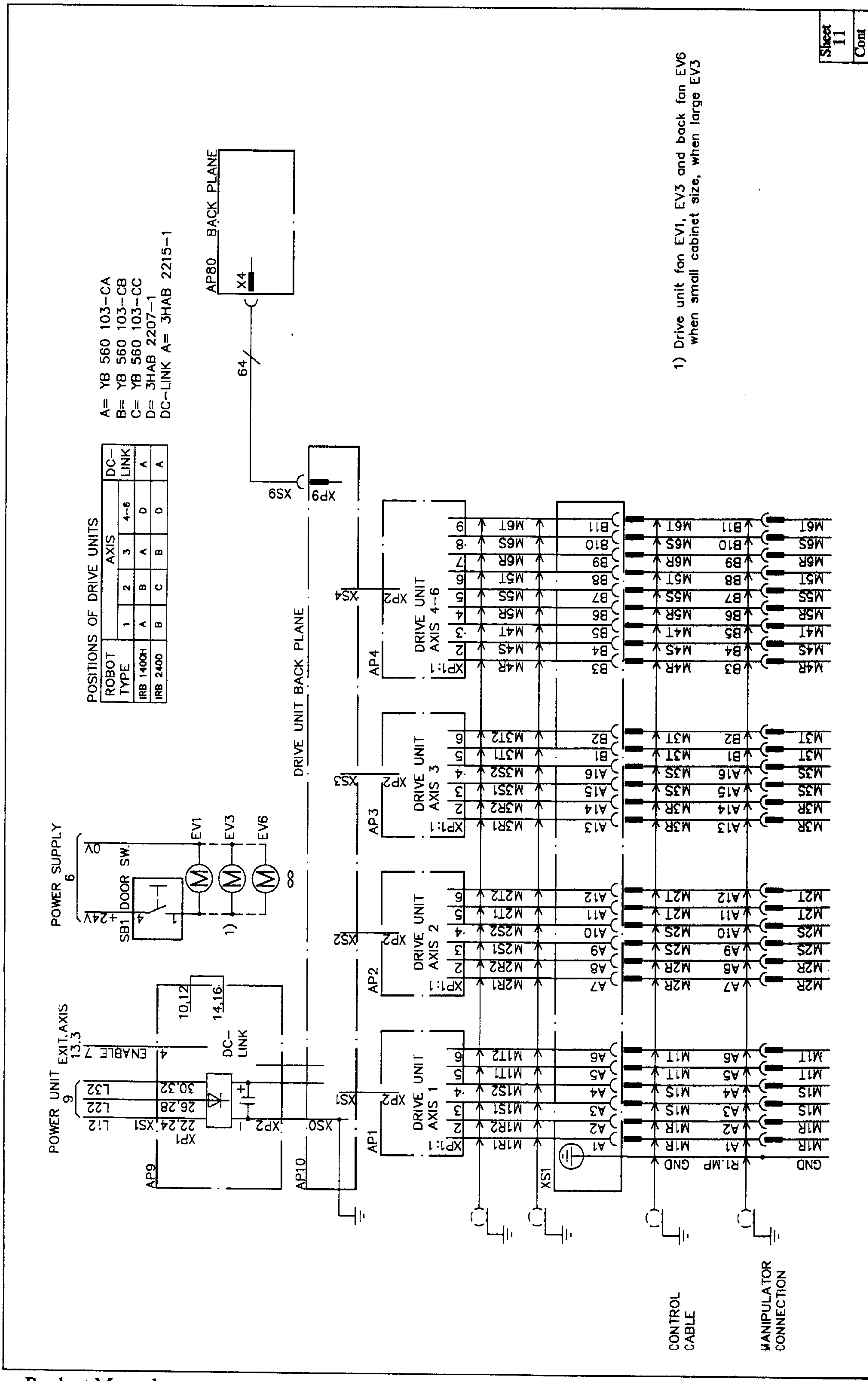

Drive system, IRB 1400, IRB 2400

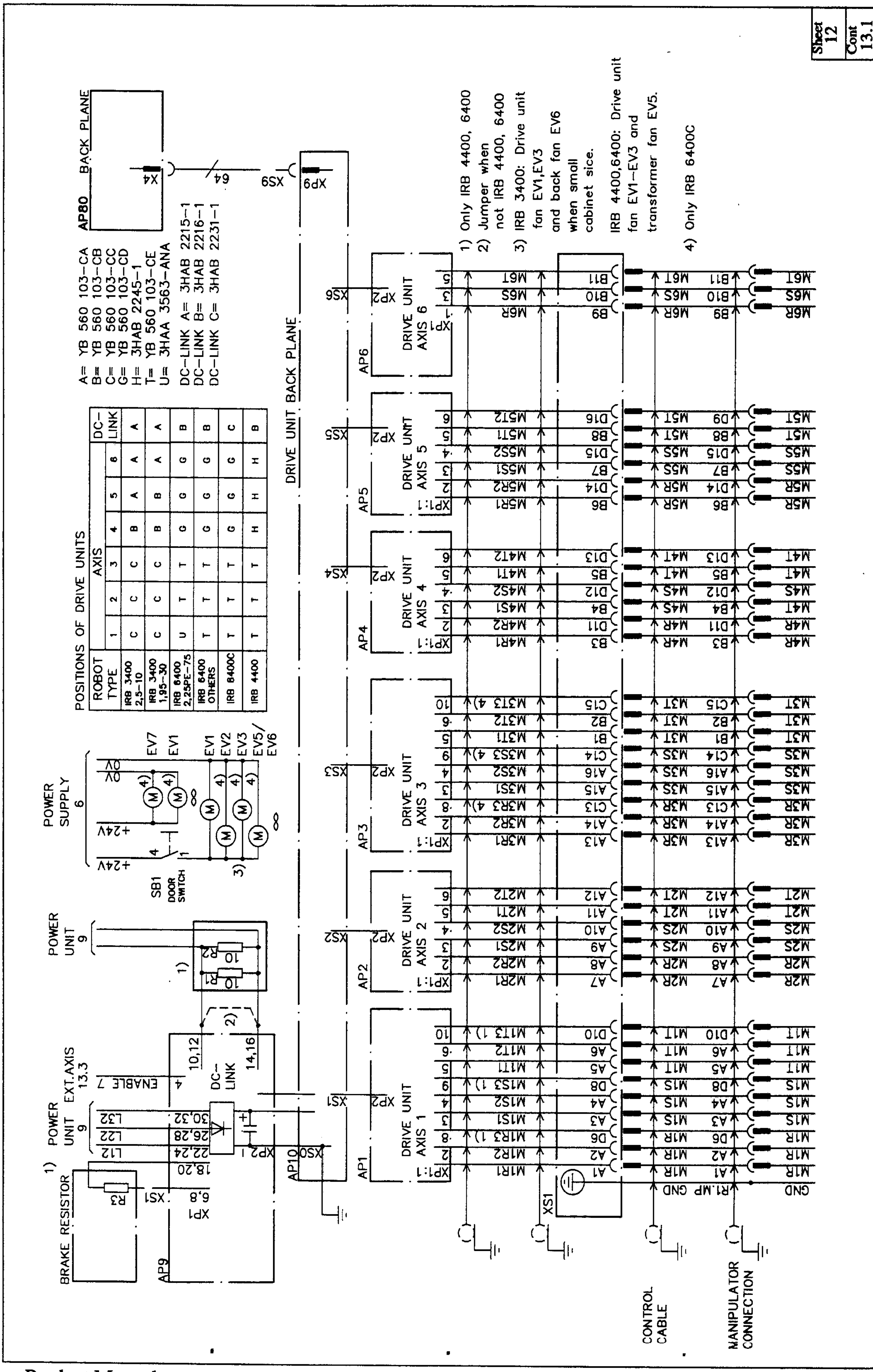

POSITIONS OF DRIVE UNITS

ROBOT TYPE	AXIS 1	AXIS 2	AXIS 3	AXIS 4	AXIS 5	AXIS 6	DC-LINK
IRB 3400 2,5-10	C	C	C	B	A	A	A
IRB 3400 1,95-30	C	C	C	B	B	A	A
IRB 6400 2,25PE-75	U	T	T	G	G	G	B
IRB 6400 OTHERS	T	T	T	G	G	G	B
IRB 6400C	T	T	T	G	G	G	C
IRB 4400	T	T	T	H	H	H	B

Drive system, IRB 3400, IRB 4400, IRB 6400

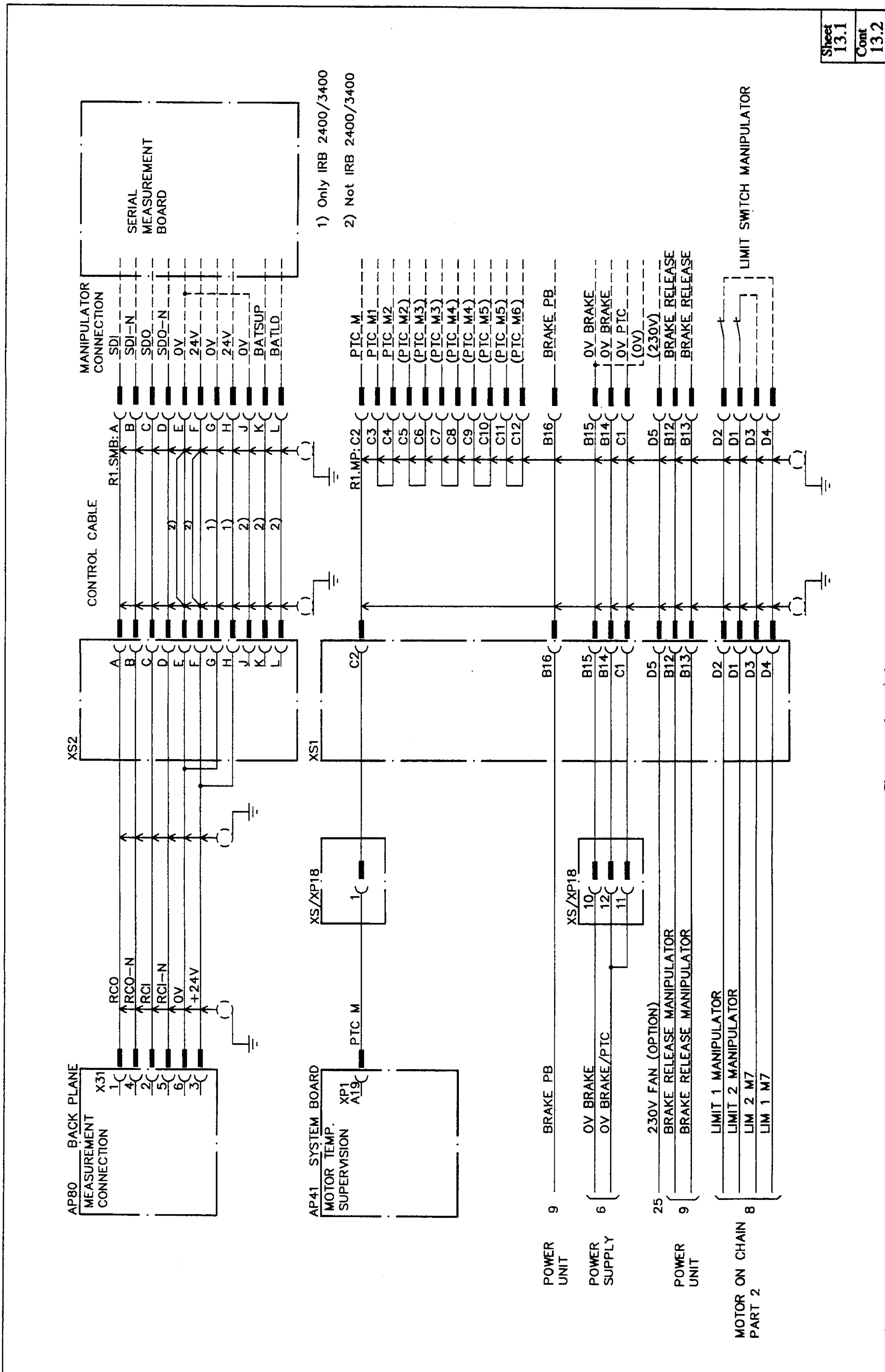

Control cable

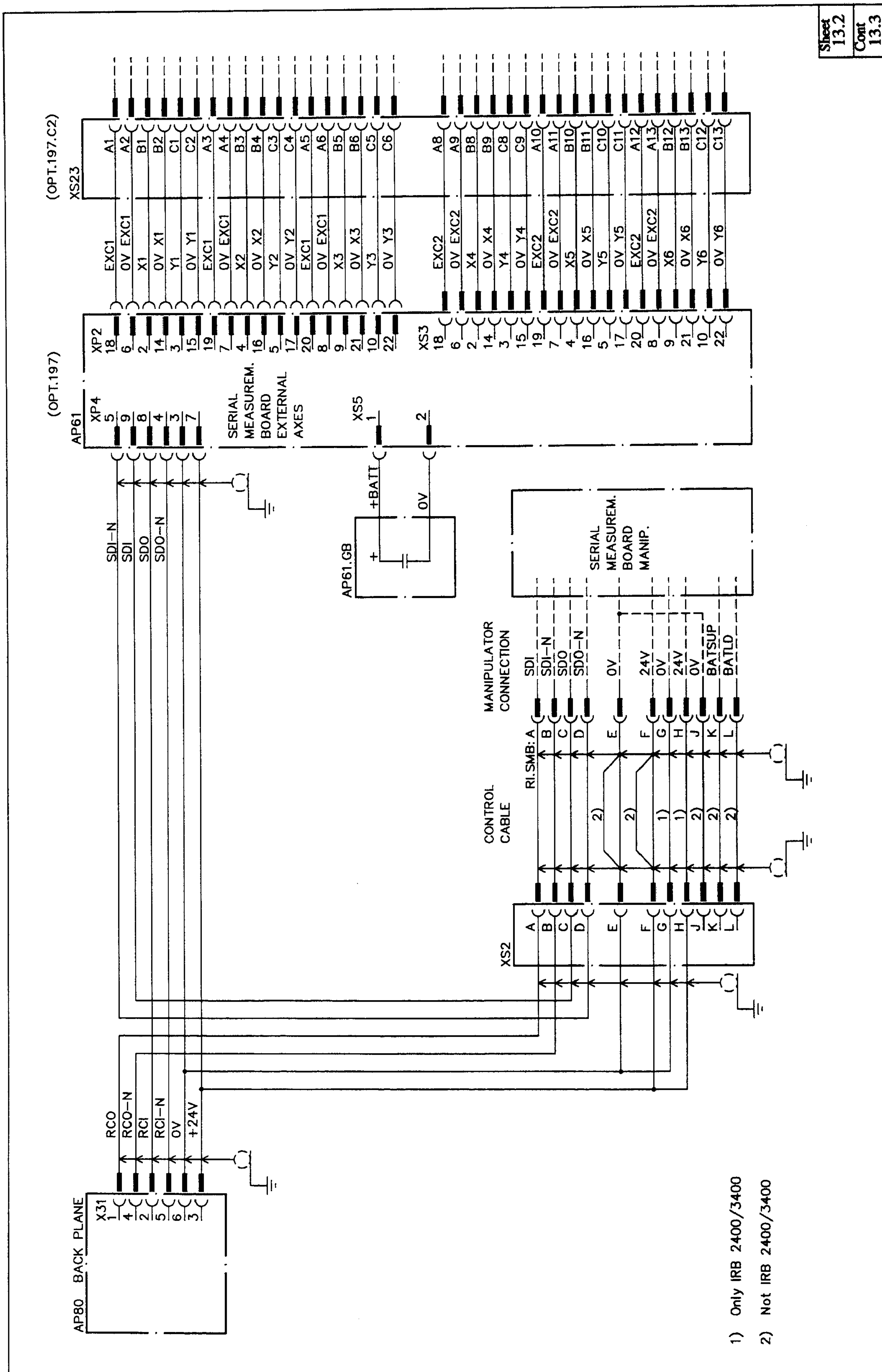

Serial measurement board, external axes

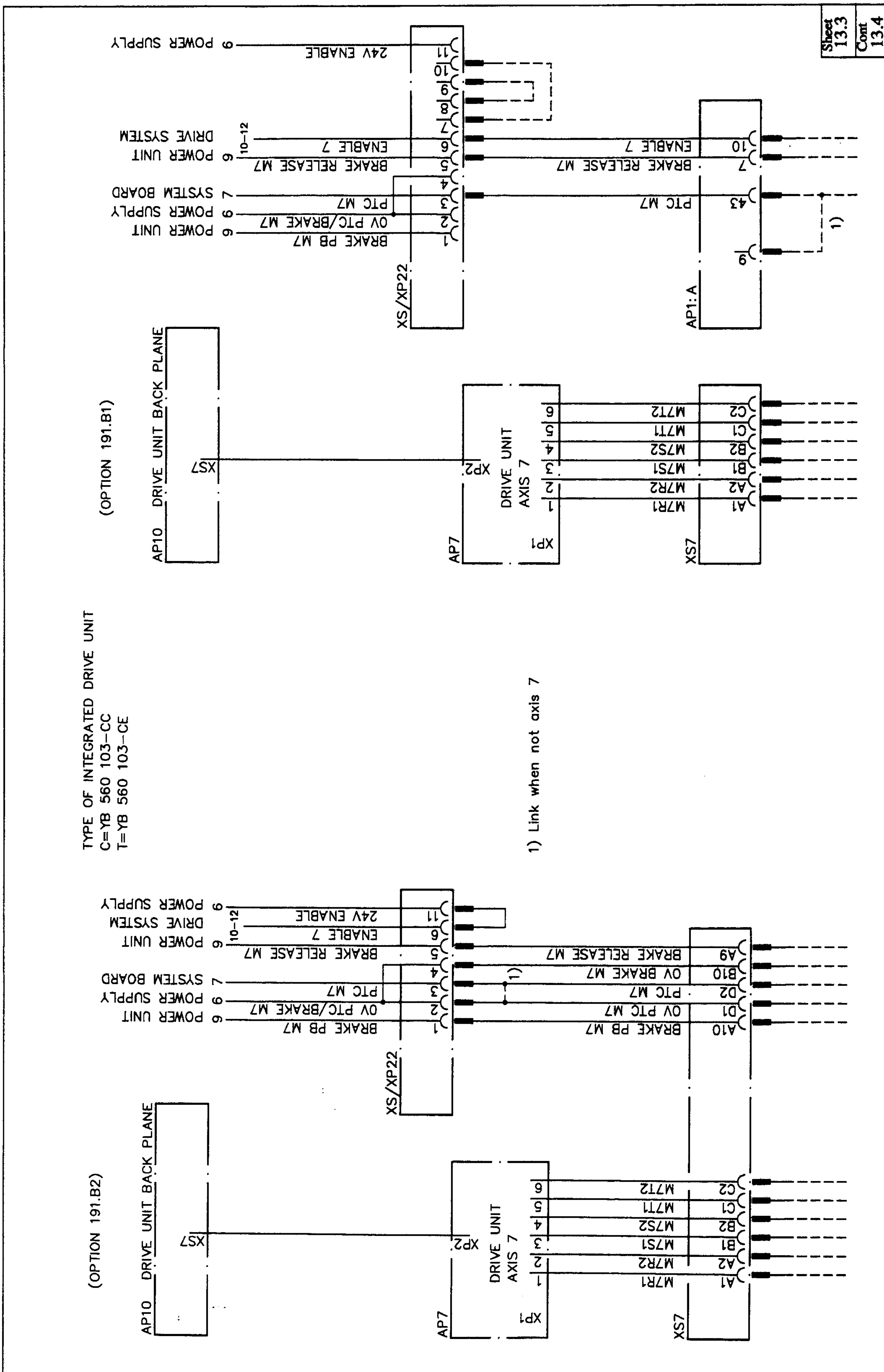

Integrated drive unit, external axis

Sheet 13.4
Cont 13.5

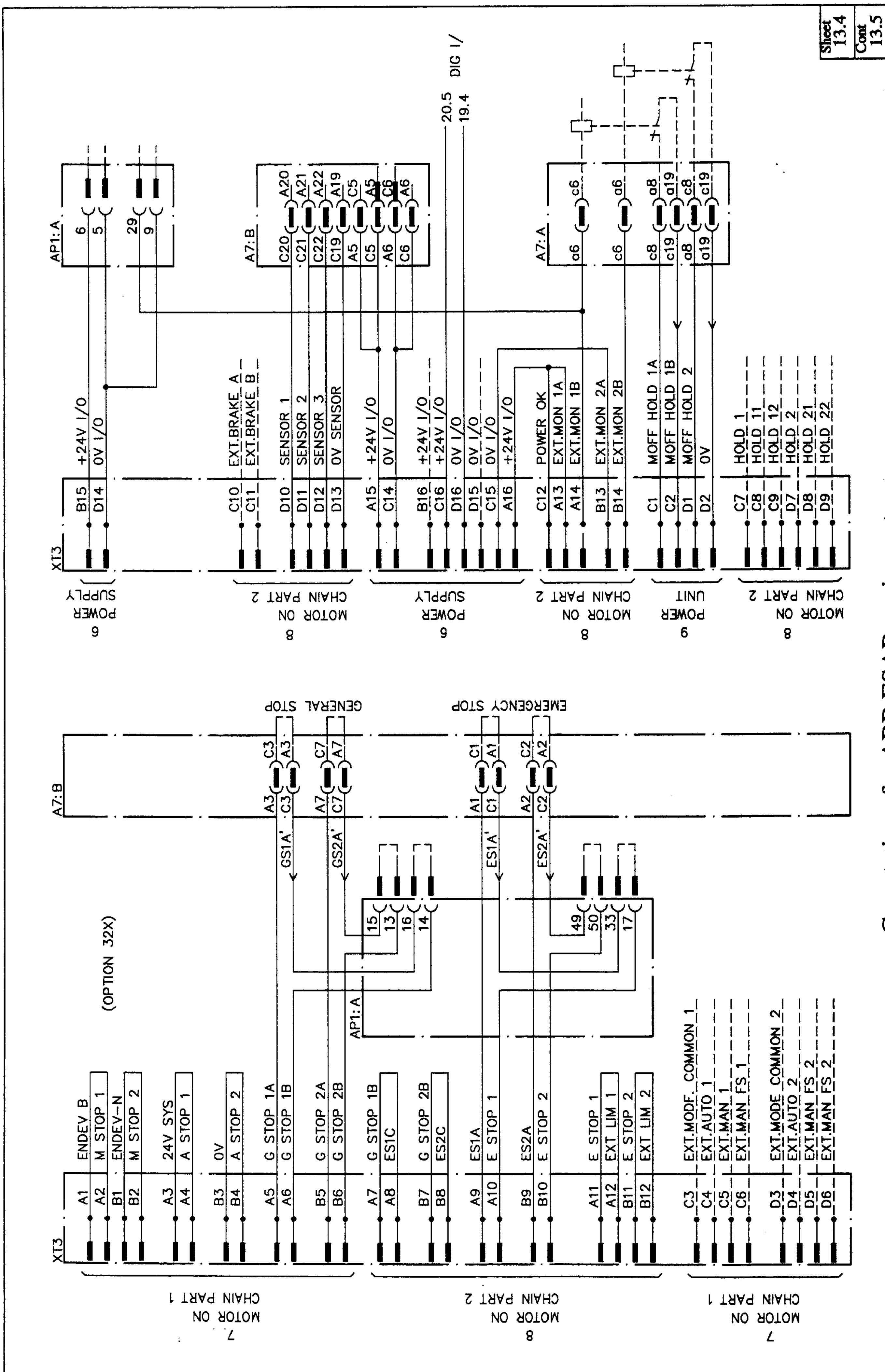

Connections for ABB ESAB equipment

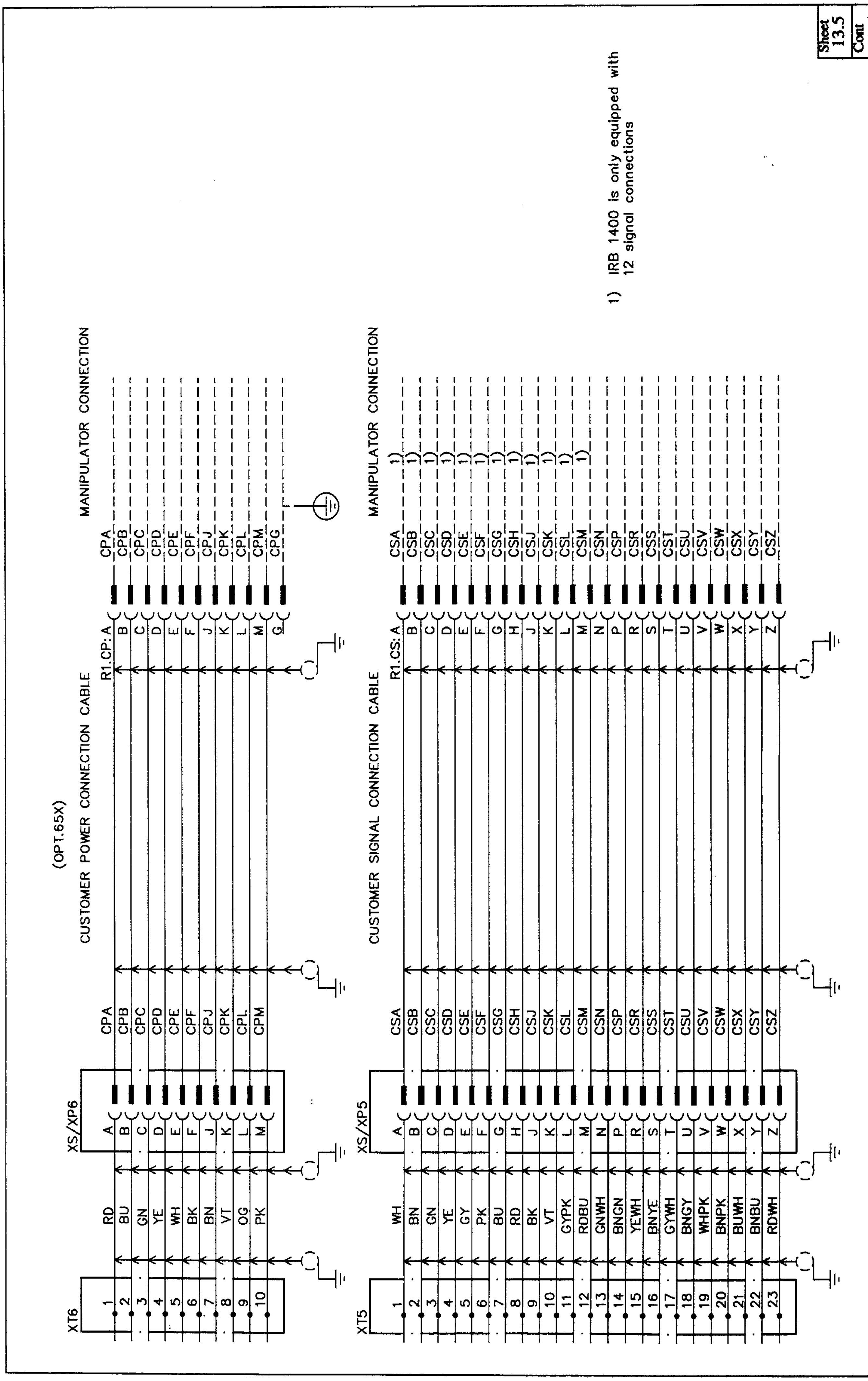

Optional customer connections, manipulator

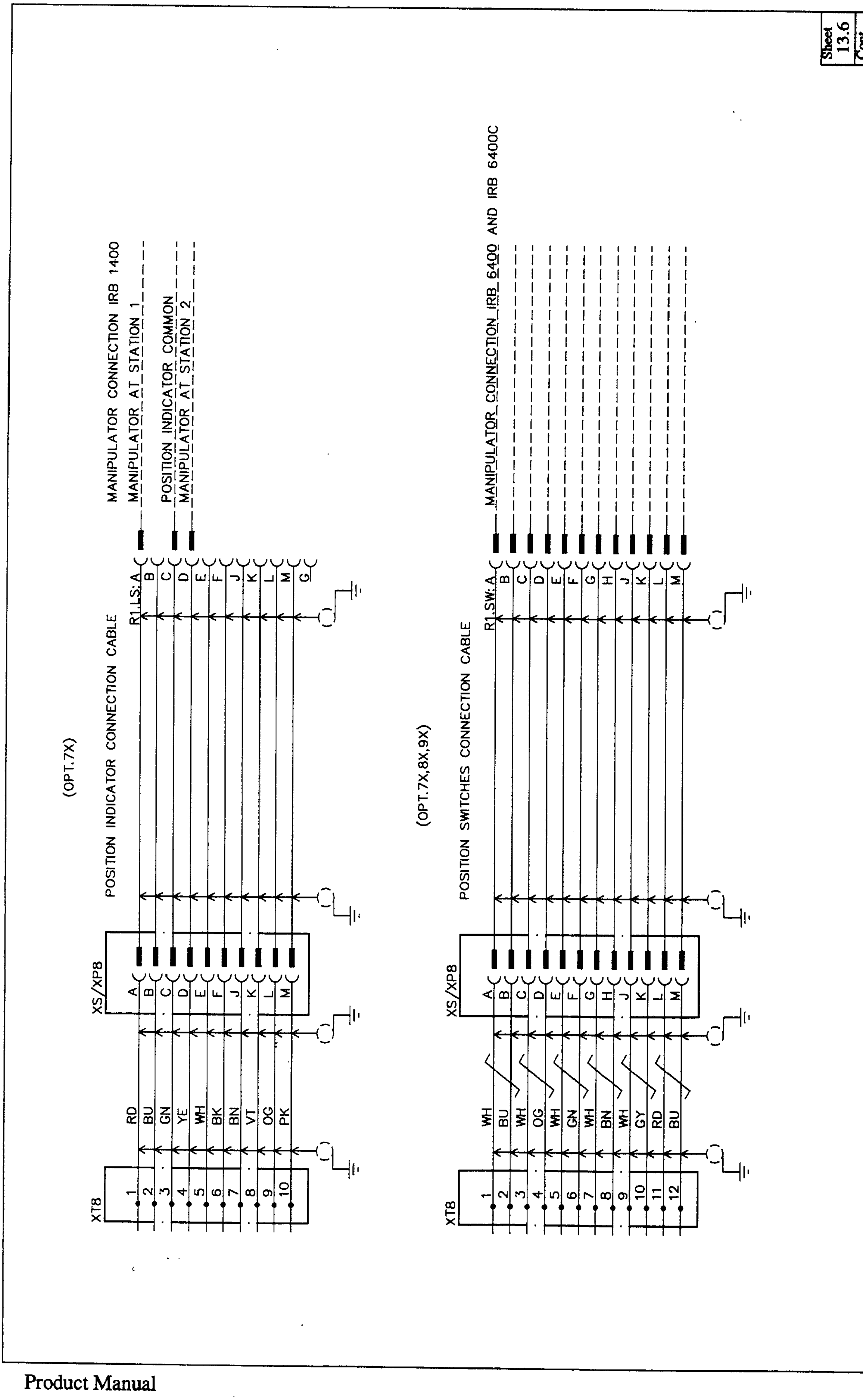

Position indicator, optional

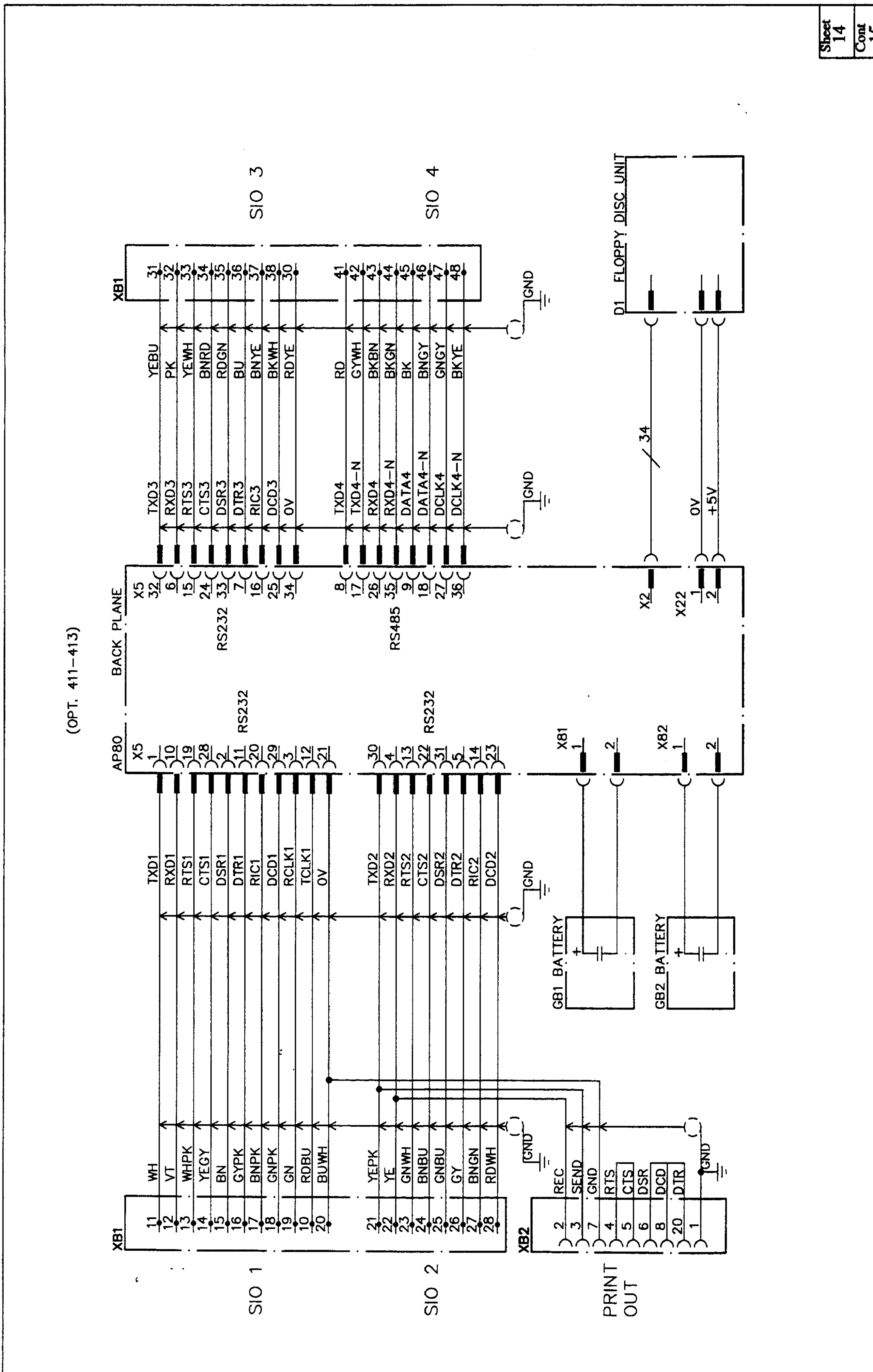

Floppy disc unit, data ports, batteries

Sheet 15 Cont 16

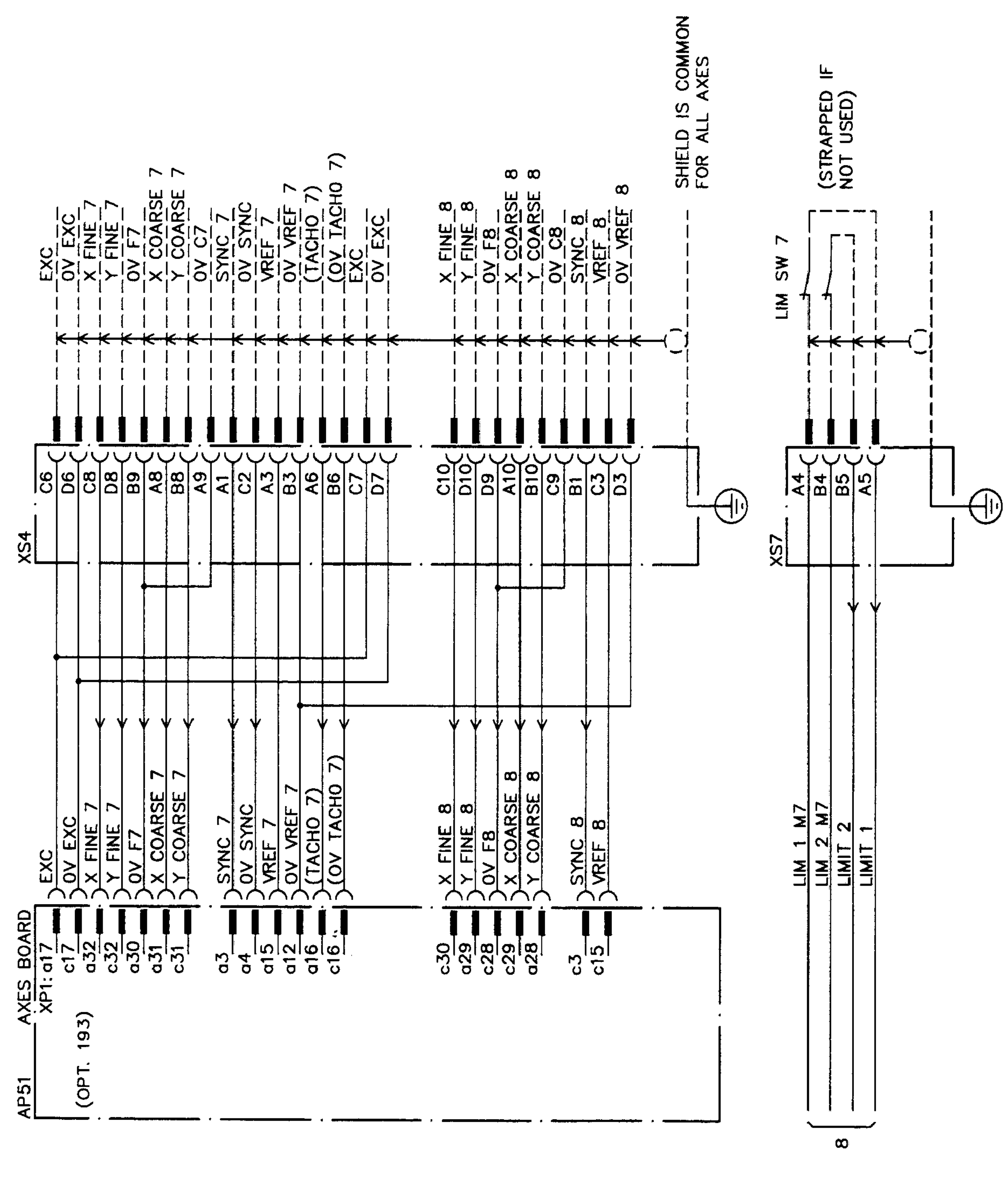

External axes 7 - 8

Sheet 16 Cont 17

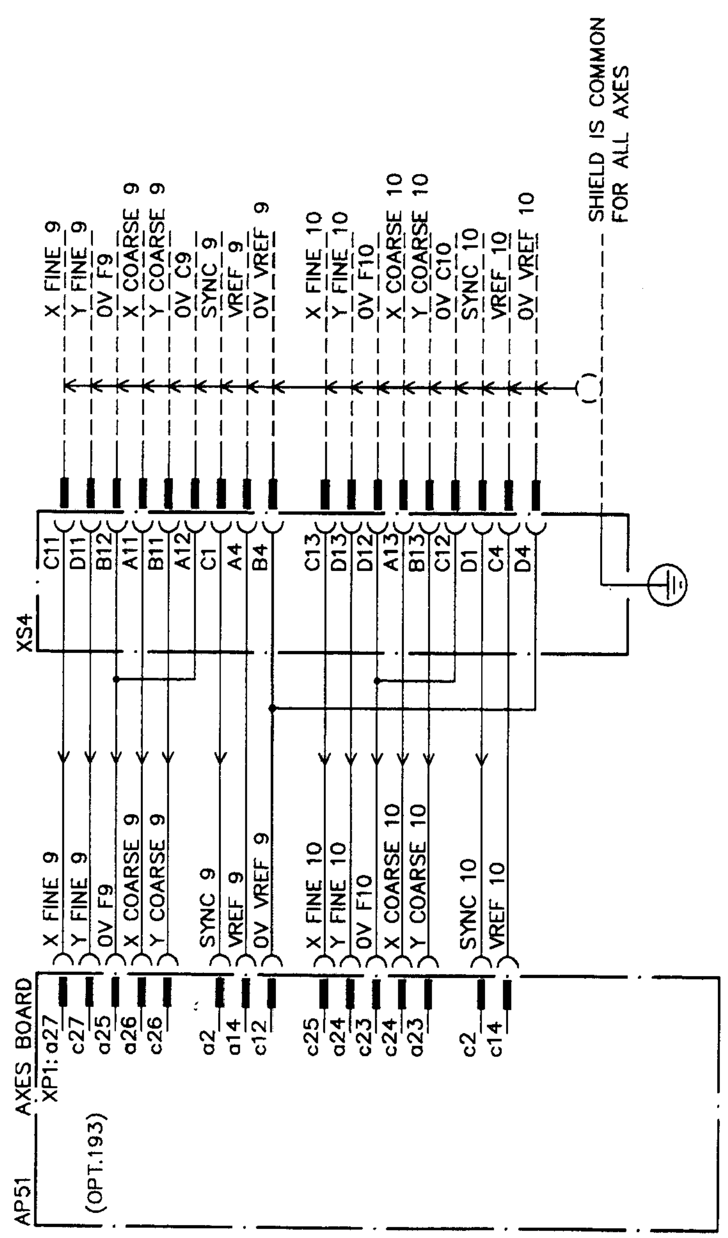

External axes 9 - 10

Sheet 17 Cont 18

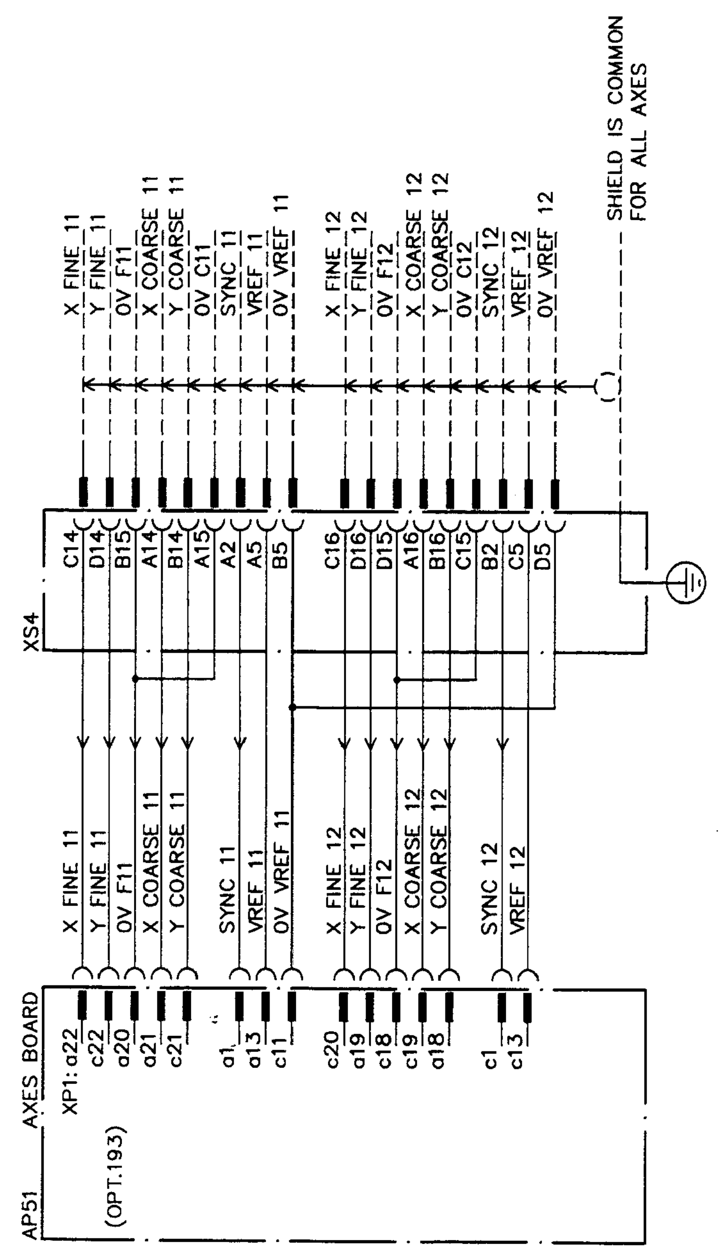

External axes 11 - 12

OPTIONAL I/O BOARDS IN CONTROL SYSTEM S4

I/O-BOARD POSITION	I/O-BOARD DESIGNATION	I/O TYPE	CUSTOMER CONNECTIONS					INTERNAL I/O-SUPPLY OPT.339	
			EXTERNAL OPT.31X,38X	SCREW TERMINALS OPT.34X	RELAY UNIT OPT.37X	120V AC I/O OPT.35X	ABB ESAB OPT.32X	24V I/O	0V
1	AP11	COMBI I/O							
		ANALOGUE PART	XS10	XT10			A7: A		
		DIGITAL PART	XS11	XT11	AP21	AP21	A7: A,A7: B,AP1: A	XT18.13	XT18.5
1	AP11	ANALOGUE	XS10	XT10					
1	AP11	DIGITAL	XS11	XT11	AP21	AP21		XT18.13	XT18.5
2	AP12	DIGITAL	XS12	XT12	AP22	AP22	A7: A, AP1: A	XT18.14	XT18.6
3	AP13	DIGITAL	XS13	XT13	AP23	AP23		XT18.15	XT18.7
4	AP14	DIGITAL	XS14	XT14	AP24	AP24		XT18.16	XT18.8
5	AP15	DIGITAL	XS15	XT15	AP25	AP25		XT18.29	XT18.21
6	AP16	DIGITAL	XS16	XT16	AP26	AP26		XT18.30	XT18.22
2-6	AP12-16	REMOTE I/O-BOARD	–	XT17					

Sheet 18
Cont 18.1

I/O Board position

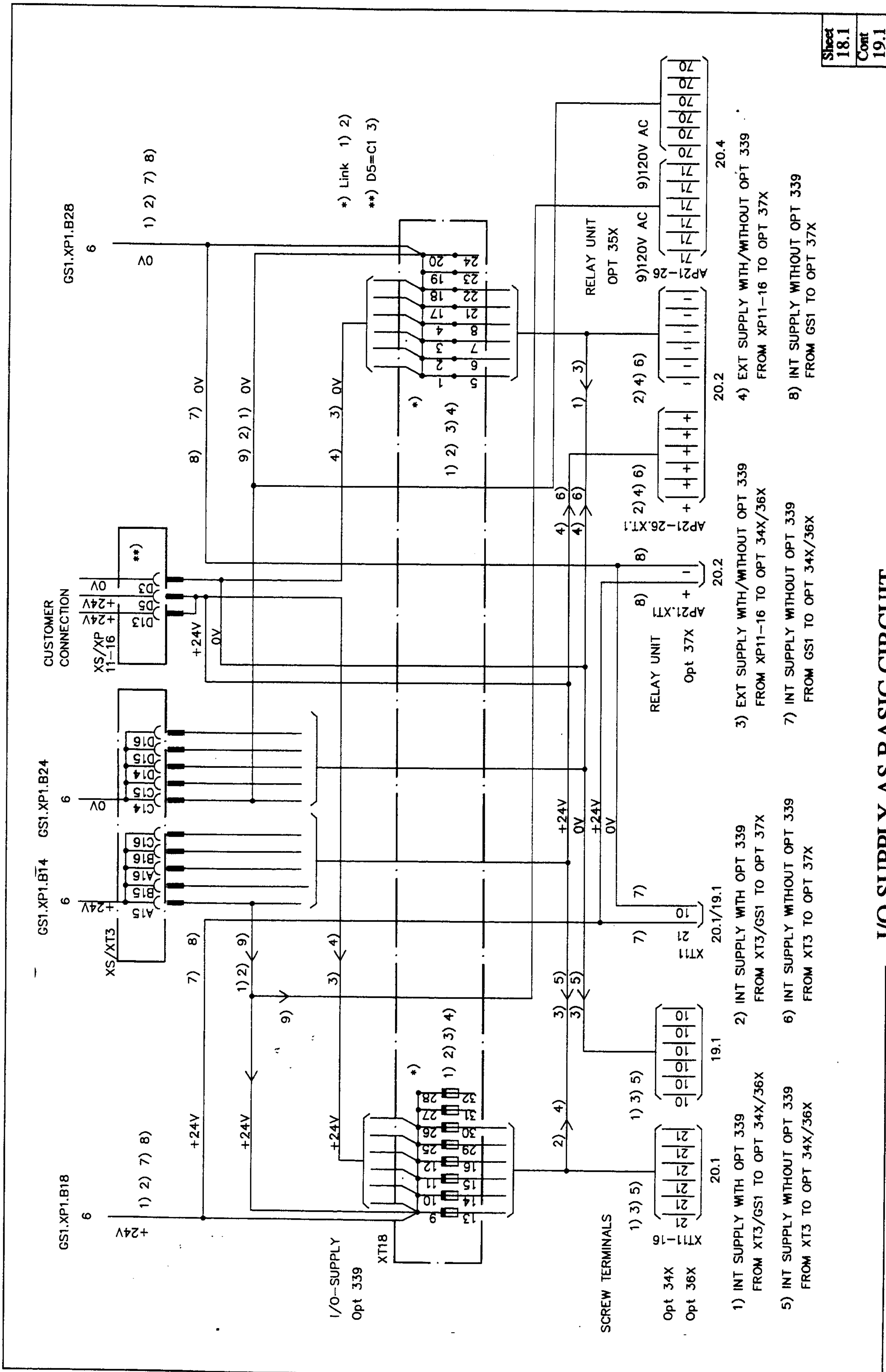
Sheet 18.1
Cont 19.1
I/O SUPPLY AS BASIC CIRCUIT
GS1.XP1.B18
GS1.XP1.B14
GS1.XP1.B24
GS1.XP1.B28
CUSTOMER CONNECTION
XS/XP 11-16
XS/XT3
I/O-SUPPLY Opt 339
XT18
SCREW TERMINALS
Opt 34X
Opt 36X
XT11-16
XT11
RELAY UNIT Opt 37X
AP21.XT1
RELAY UNIT OPT 35X
AP21-26.XT1
AP21-26
9)120V AC
*) Link 1) 2)
**) D5=C1 3)
1) INT SUPPLY WITH OPT 339 FROM XT3/GS1 TO OPT 34X/36X
2) INT SUPPLY WITH OPT 339 FROM XT3/GS1 TO OPT 37X
3) EXT SUPPLY WITH/WITHOUT OPT 339 FROM XP11-16 TO OPT 34X/36X
4) EXT SUPPLY WITH/WITHOUT OPT 339 FROM XP11-16 TO OPT 37X
5) INT SUPPLY WITHOUT OPT 339 FROM XT3 TO OPT 34X/36X
6) INT SUPPLY WITHOUT OPT 339 FROM XT3 TO OPT 37X
7) INT SUPPLY WITHOUT OPT 339 FROM GS1 TO OPT 34X/36X
8) INT SUPPLY WITHOUT OPT 339 FROM GS1 TO OPT 37X

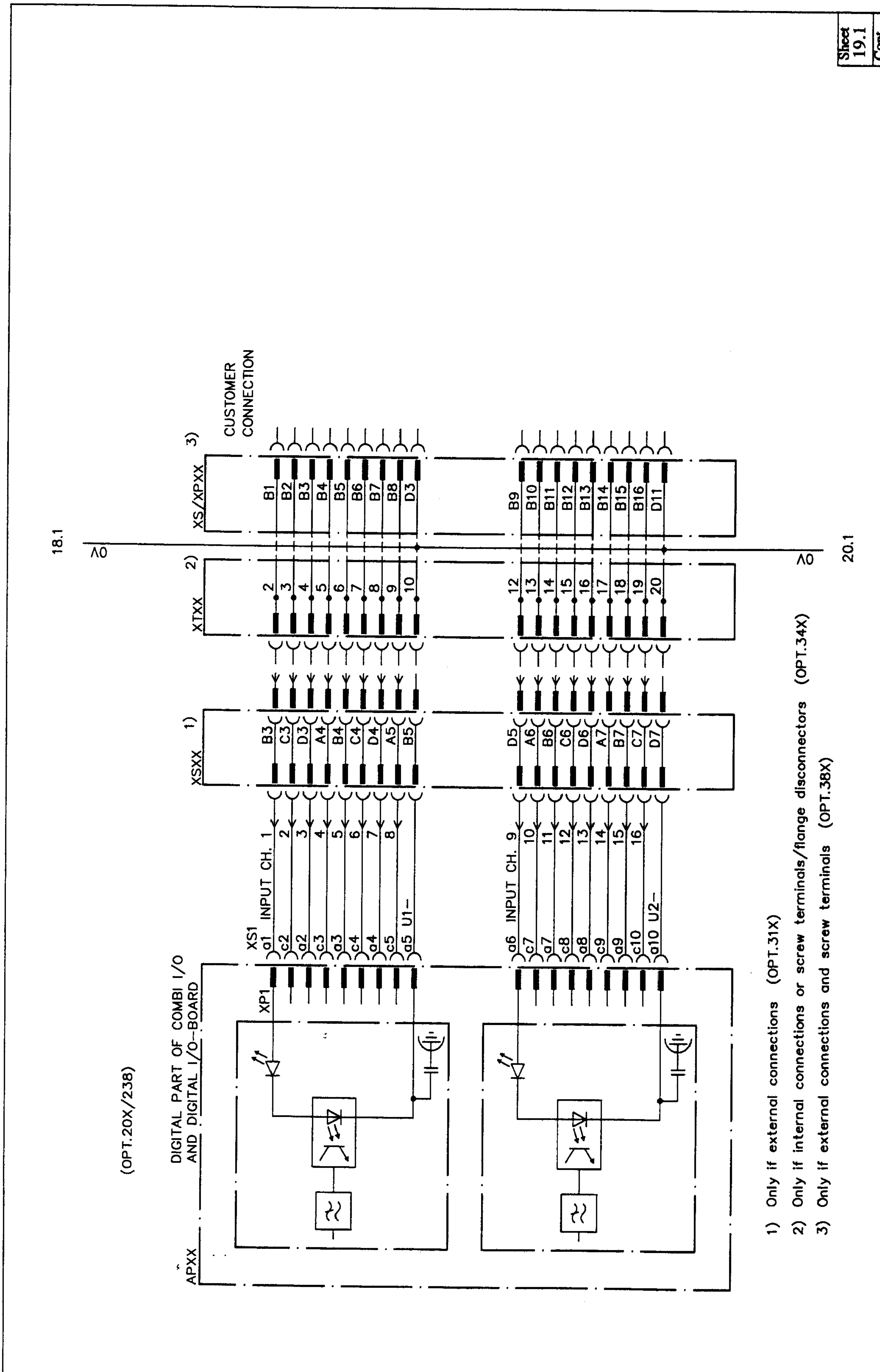

Digital part of combi I/O and digital I/O-board input part

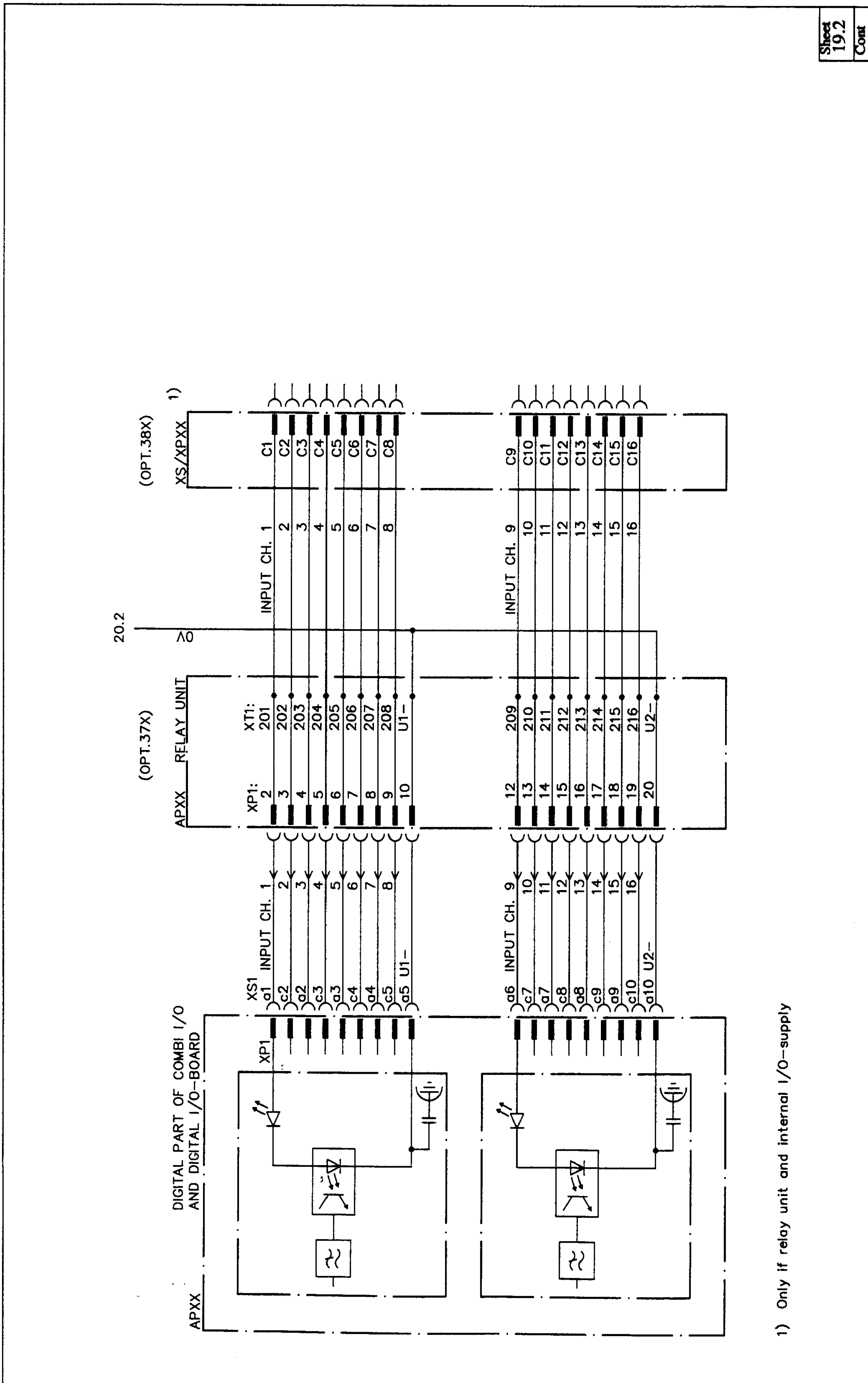

Relay unit input 1 - 16

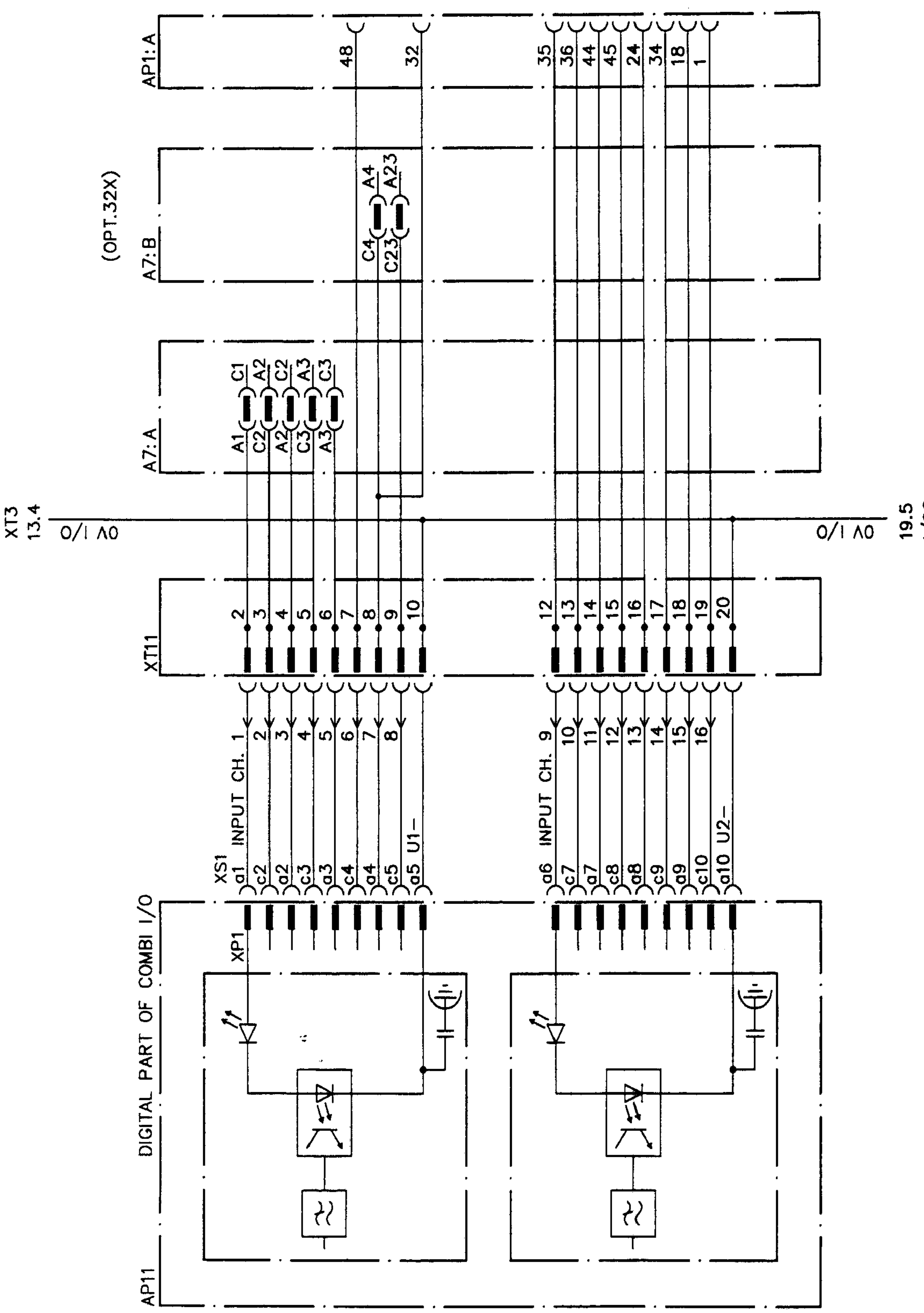

Digital part of combi I/O, input part

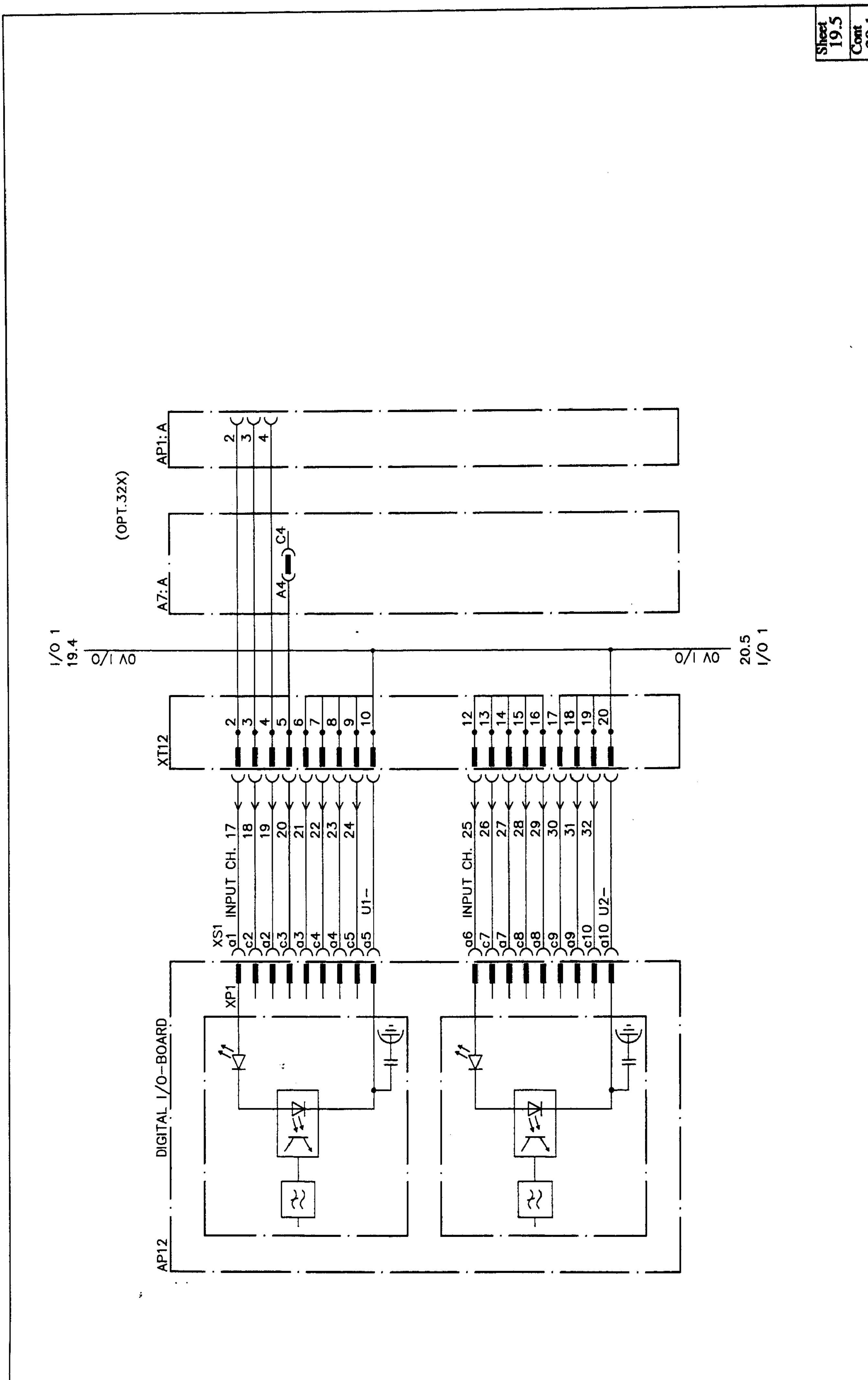

Digital I/O board, input part

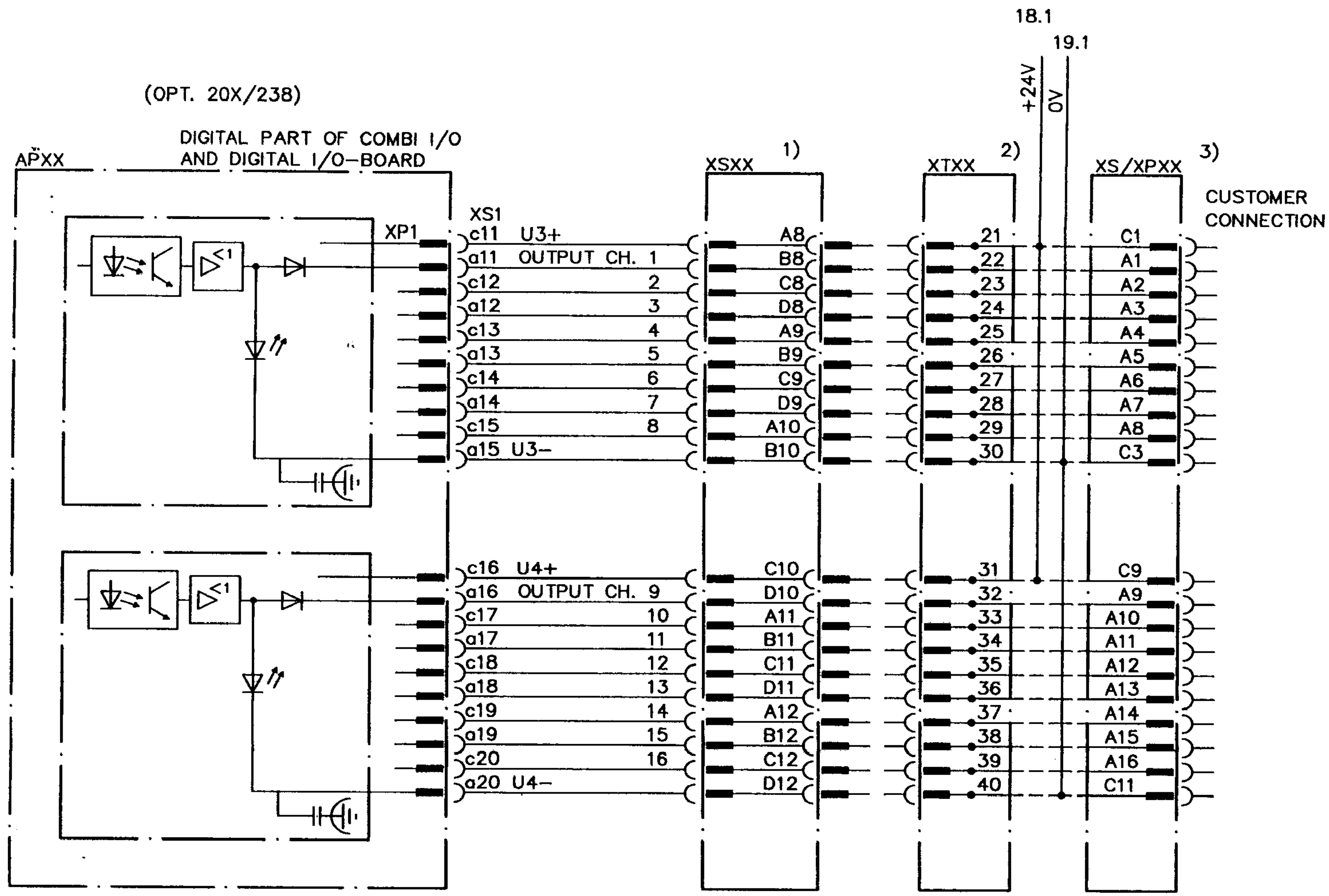

1) Only if external connections (OPT.31X)
2) Only if internal connections or screw terminals/flange disconnectors (OPT.34X)
3) Only if external connections and screw terminals (OPT.38X)

Sheet 20.1
Cont 20.2

Digital part of combi I/O and digital I/O-board, output part

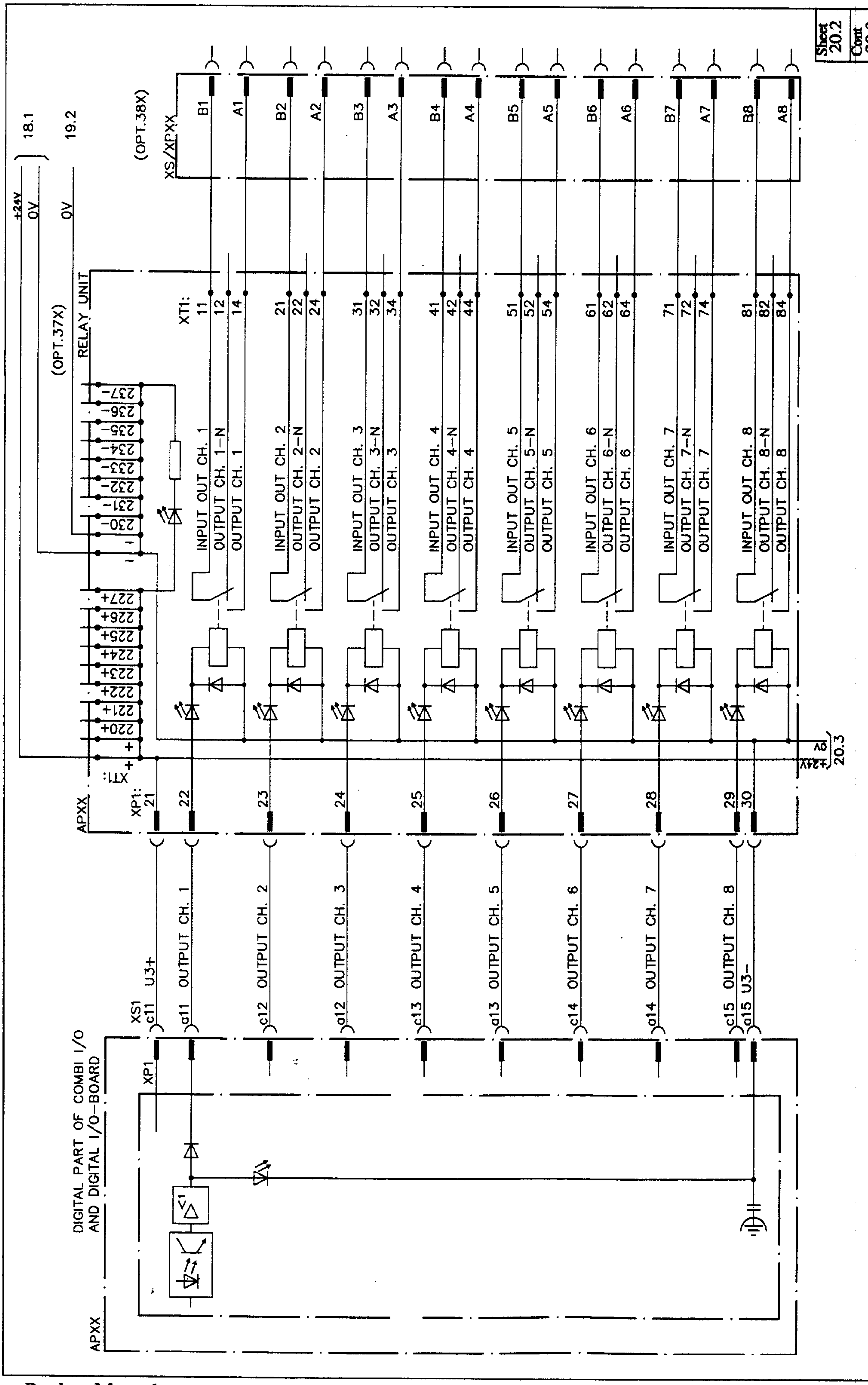

Relay unit, output 1 - 8

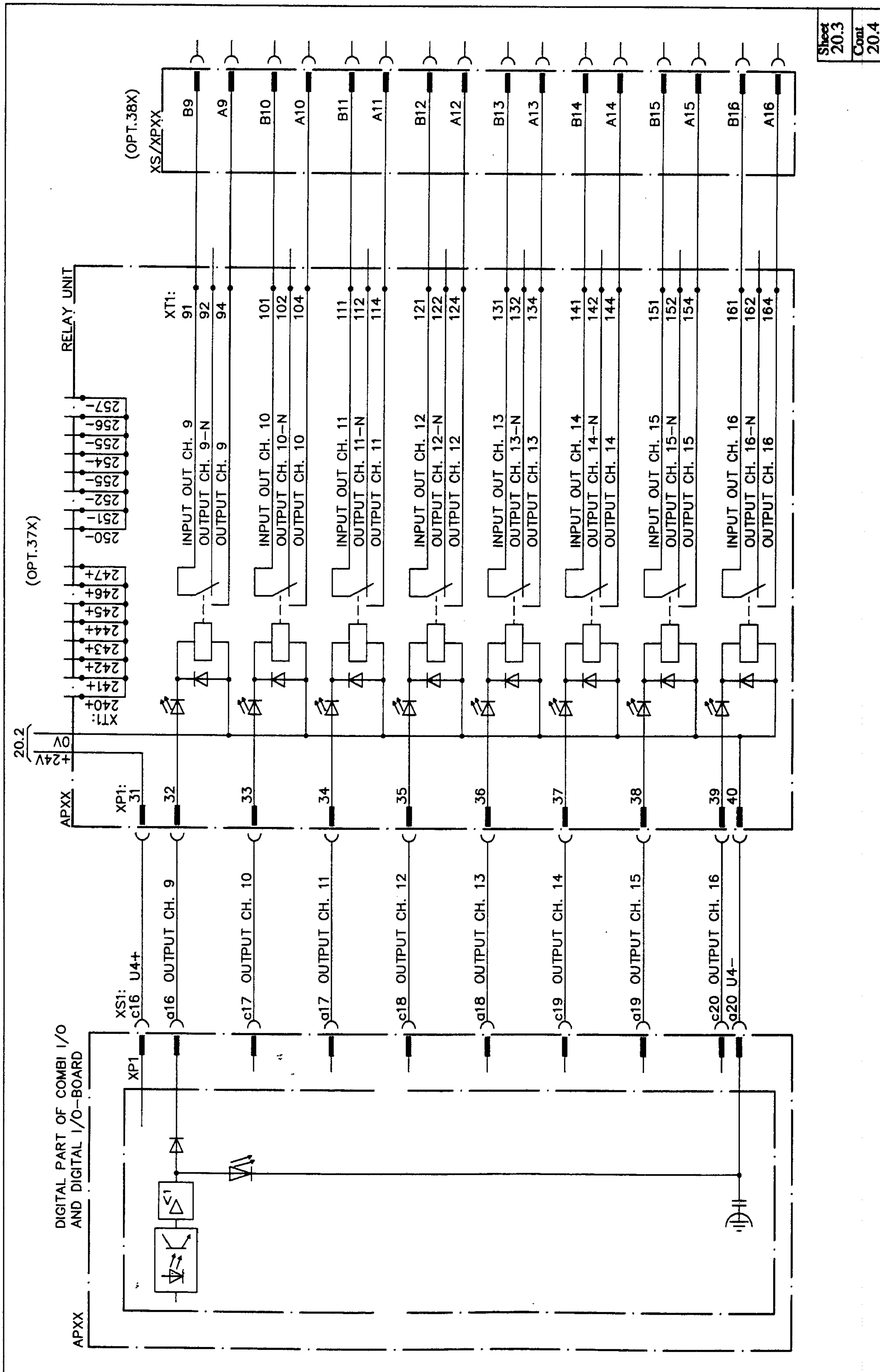

Relay unit, output 9 - 16

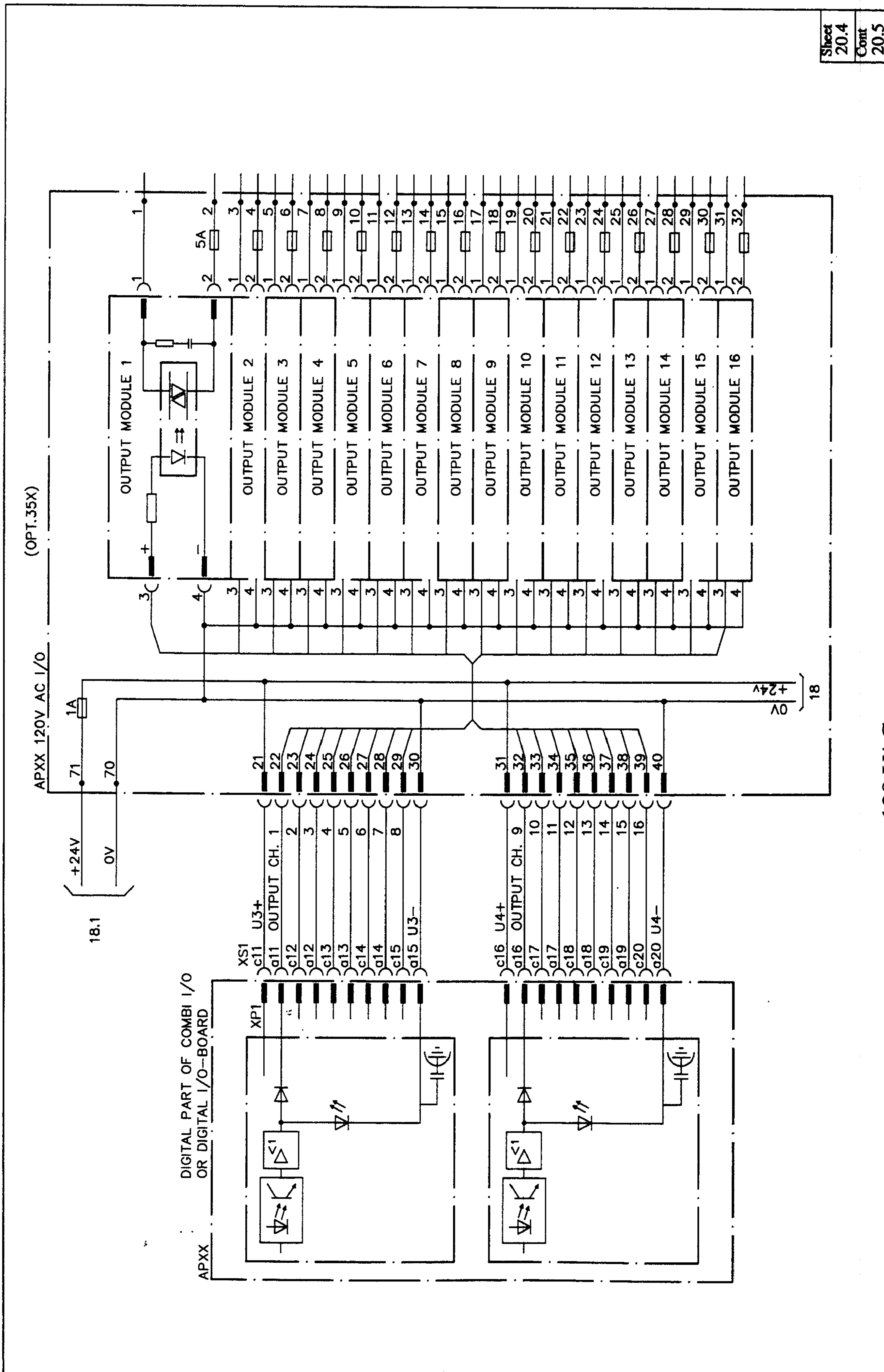

120 VAC output

Sheet	Cont
20.5	20.6

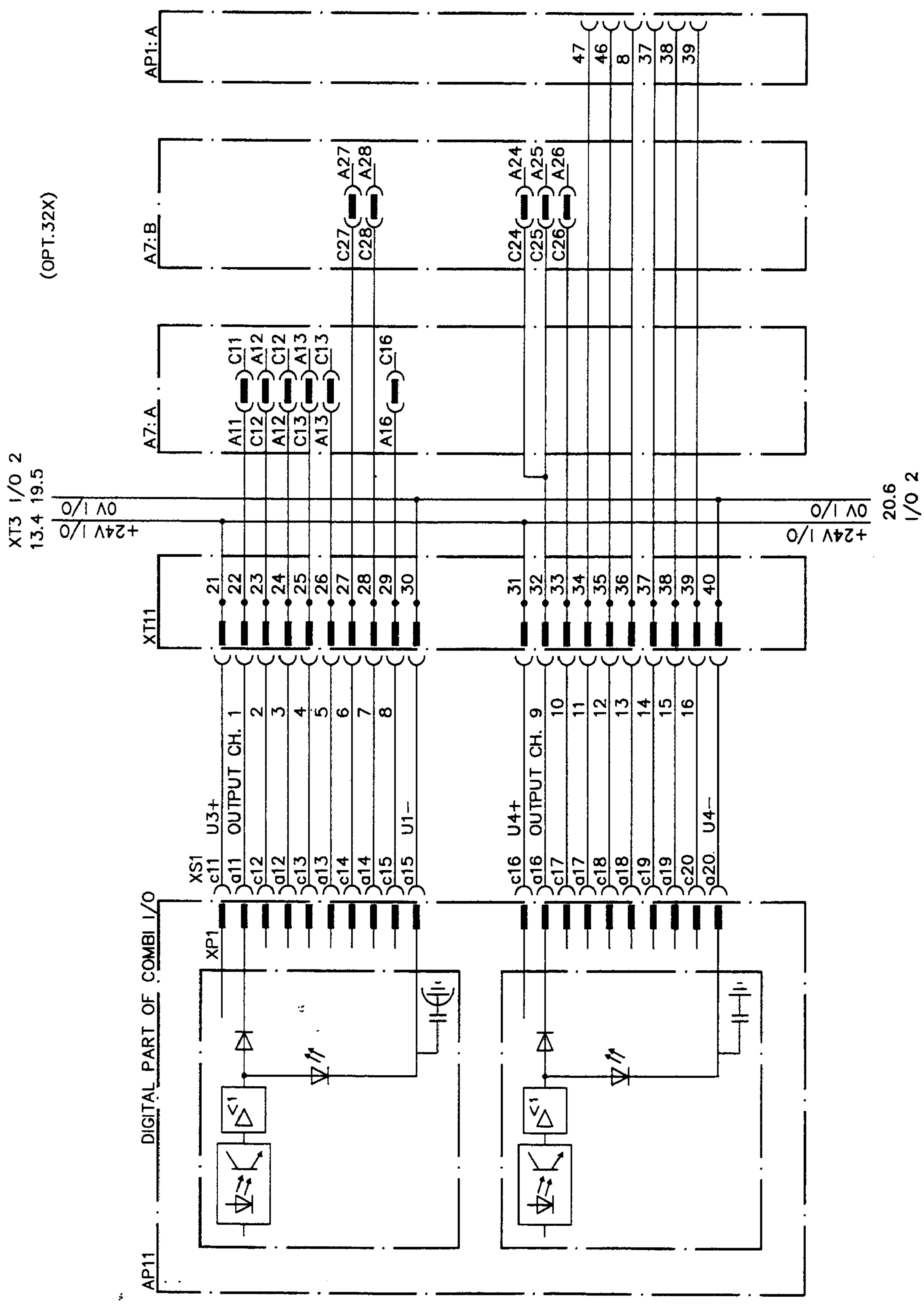

Digital part of combi I/O, output part

Sheet 20.6
Cont 21.1

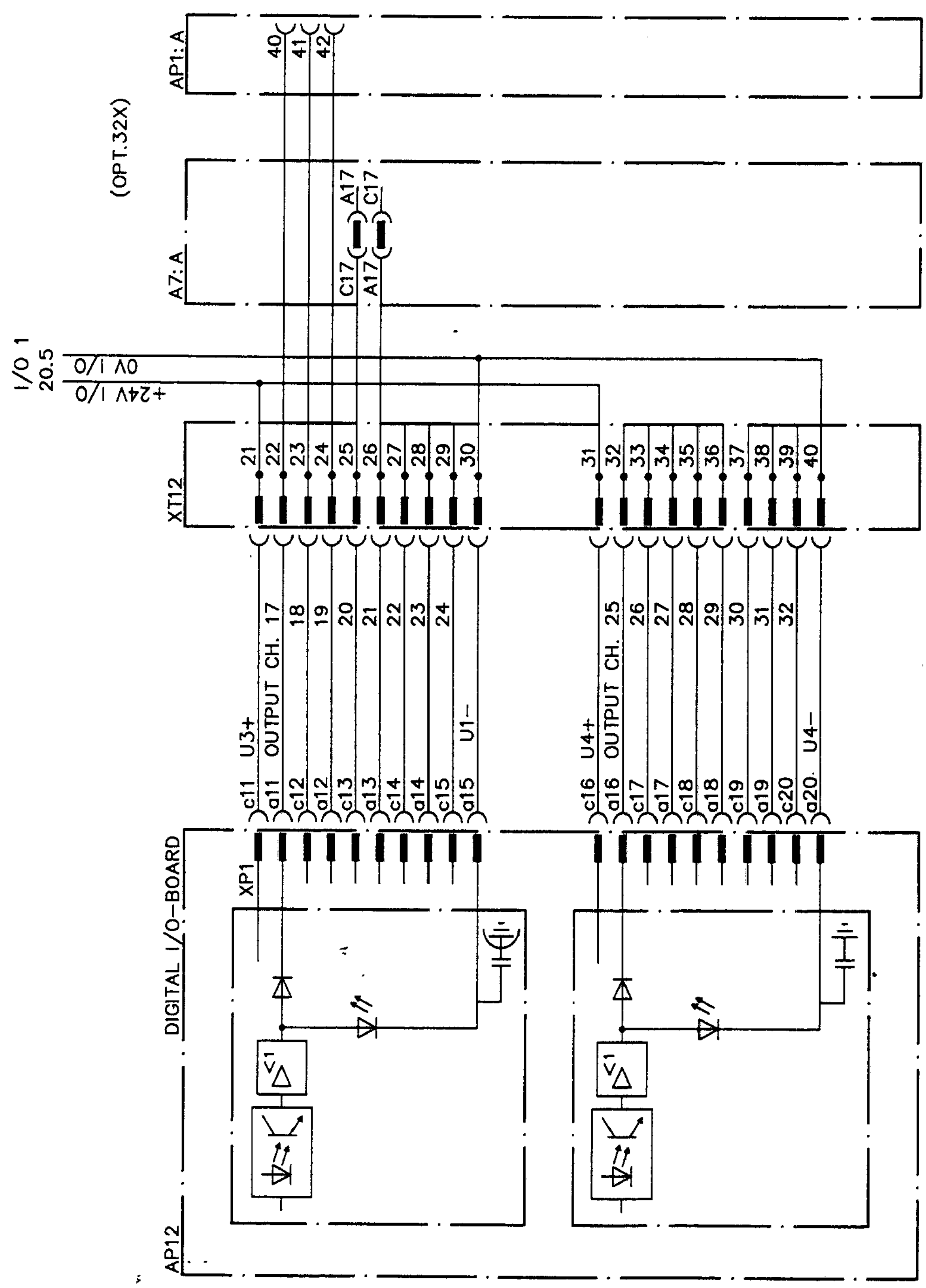

Digital I/O board, output part

Sheet 21.1
Cont 21.2

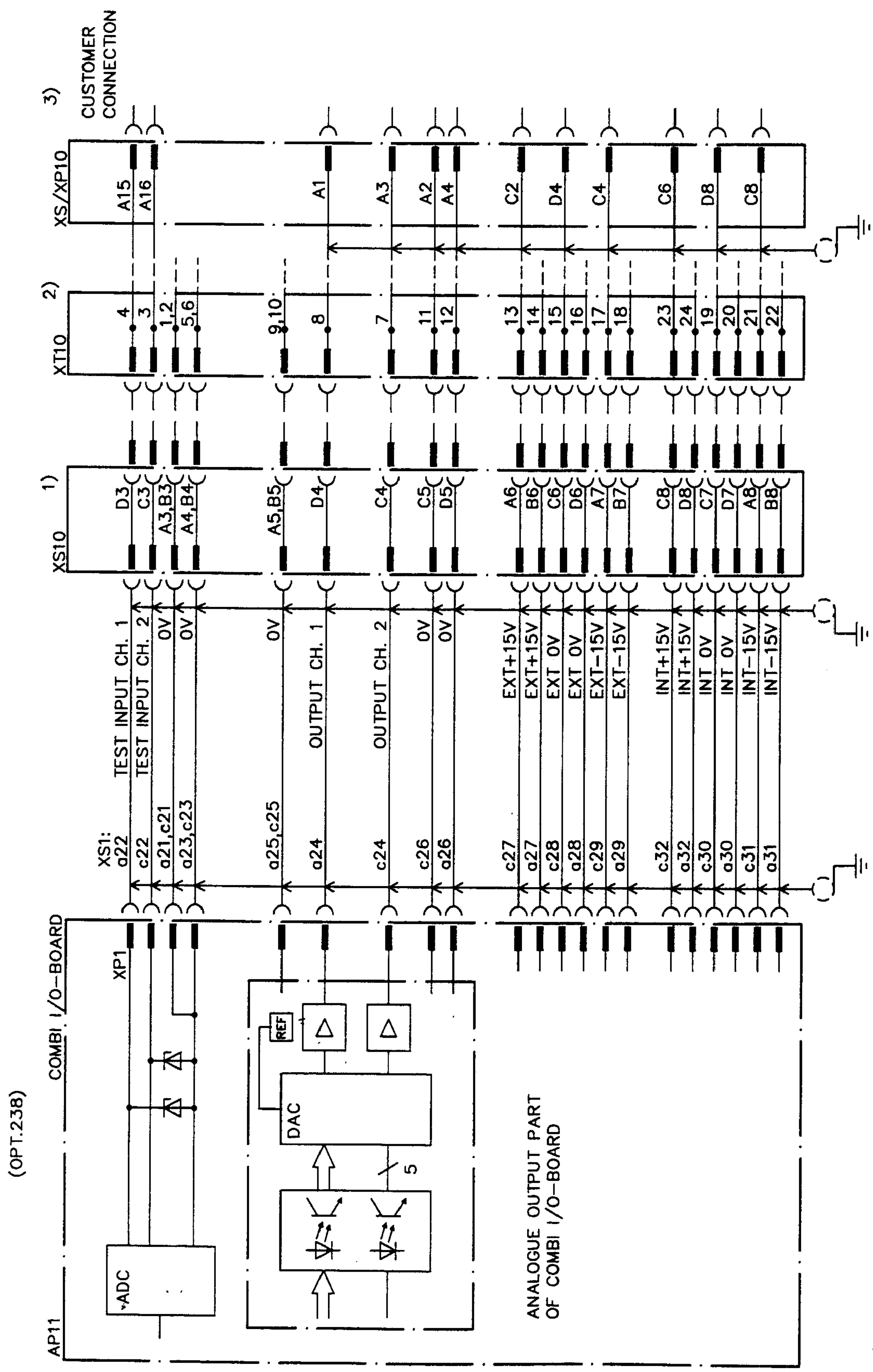

1) Only if external connections (OPT.31X)
2) Only if screw terminals/flange disconnectors (OPT.34X)
3) Only if external connections and screw terminals (OPT.38X)

Combi I/O-board analoge output part

Sheet	Cont
21.2	22

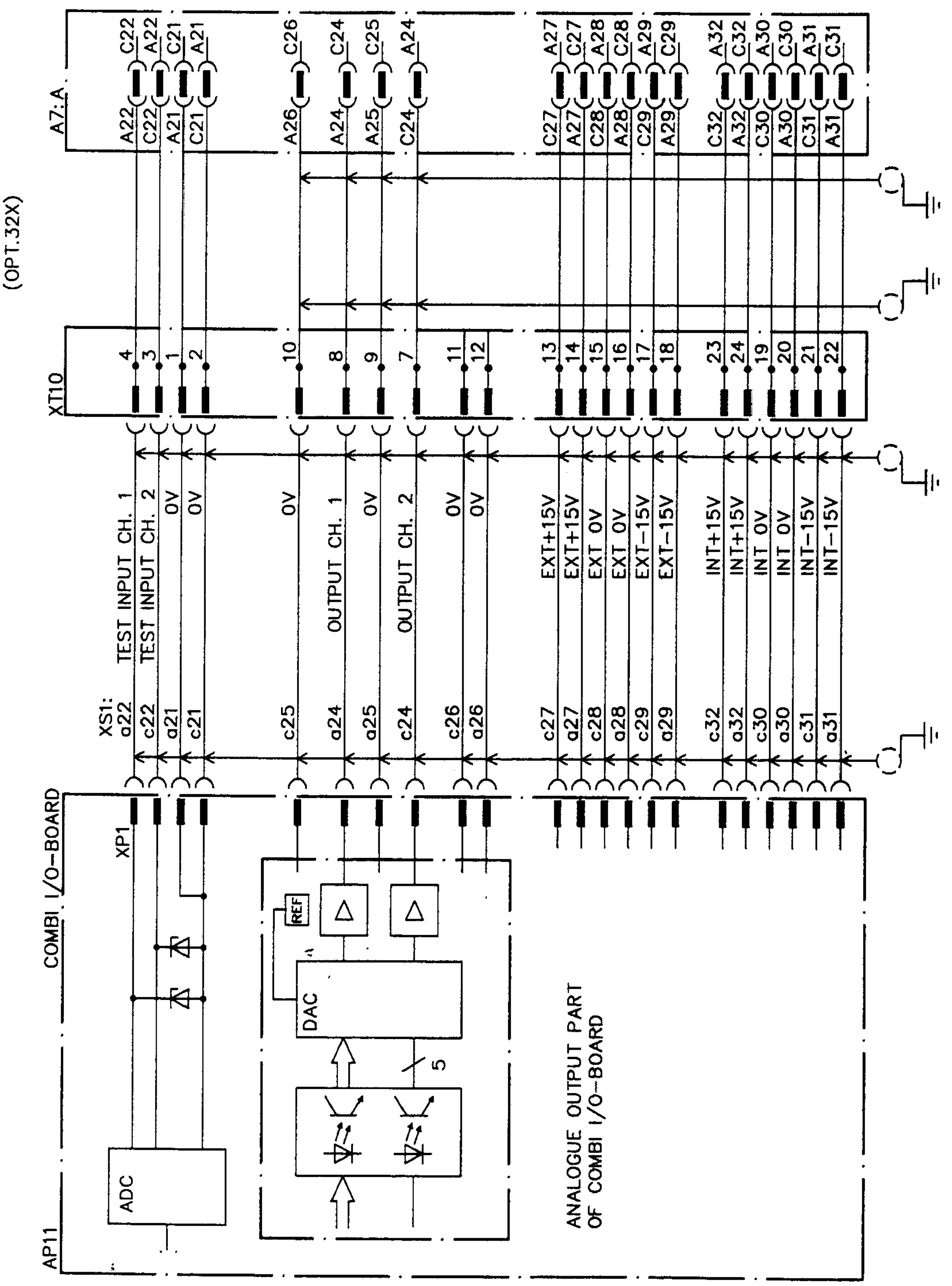

Combi I/O-board analoge output part

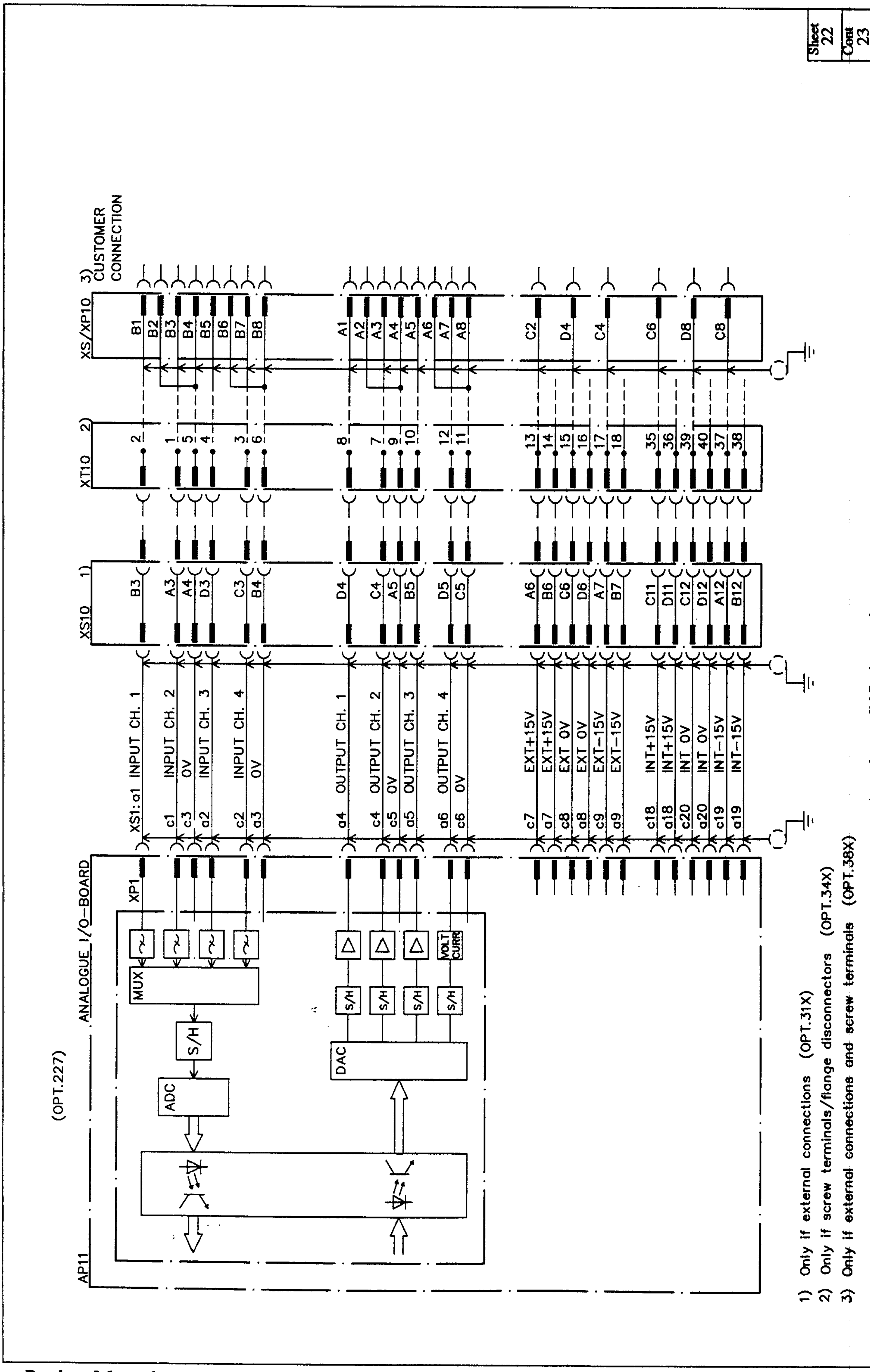
Sheet 22
Cont 23
(OPT.227)
AP11
ANALOGUE I/O-BOARD
XP1
MUX
S/H
ADC
DAC
VOLT CURR
XS10 1)
XT10 2)
XS/XP10 3)
CUSTOMER CONNECTION
XS1: a1 INPUT CH. 1
c1 INPUT CH. 2
c3 0V
a2 INPUT CH. 3
c2 INPUT CH. 4
a3 0V
a4 OUTPUT CH. 1
c4 OUTPUT CH. 2
c5 0V
a5 OUTPUT CH. 3
a6 OUTPUT CH. 4
c6 0V
c7 EXT+15V
a7 EXT+15V
c8 EXT 0V
a8 EXT 0V
c9 EXT-15V
a9 EXT-15V
c18 INT+15V
a18 INT+15V
c20 INT 0V
a20 INT 0V
c19 INT-15V
a19 INT-15V
1) Only if external connections (OPT.31X)
2) Only if screw terminals/flange disconnectors (OPT.34X)
3) Only if external connections and screw terminals (OPT.38X)
Analoge I/O-board

Sheet 23 | Cont 24

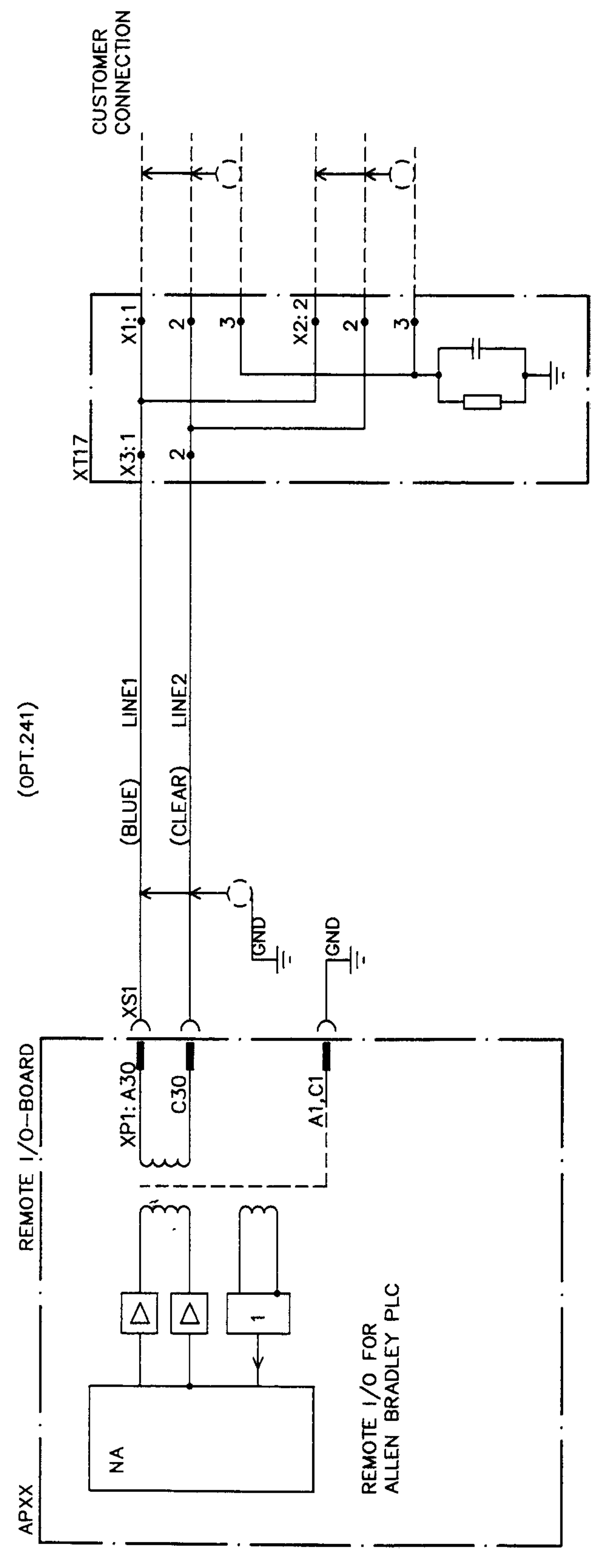

Remote I/O-board for Allen Bradley PLC

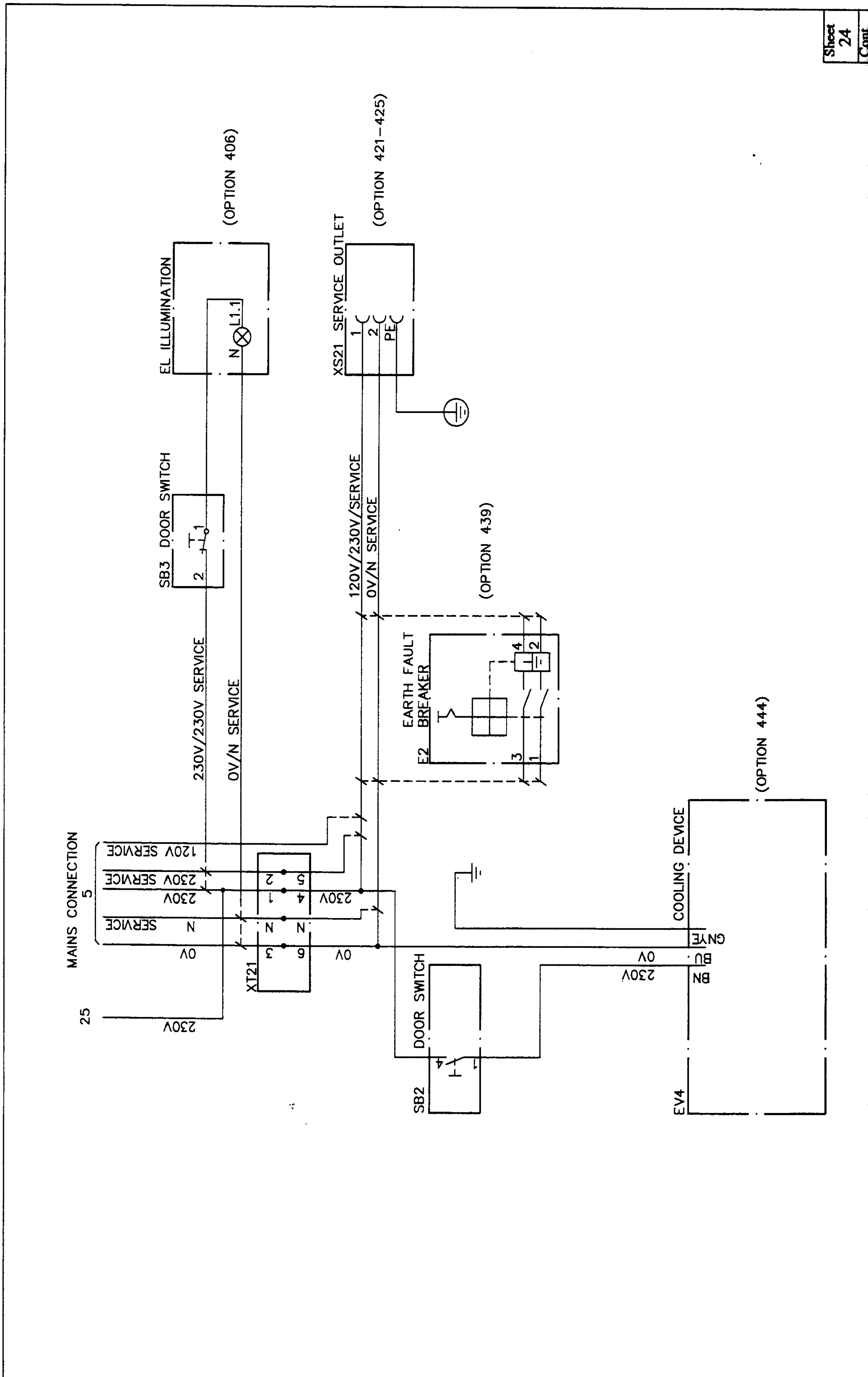

Cooling device, service outlet, illumination (options)

Sheet	Cont
25	26

Optional fan, axis 1 manipulator, time delay, concator

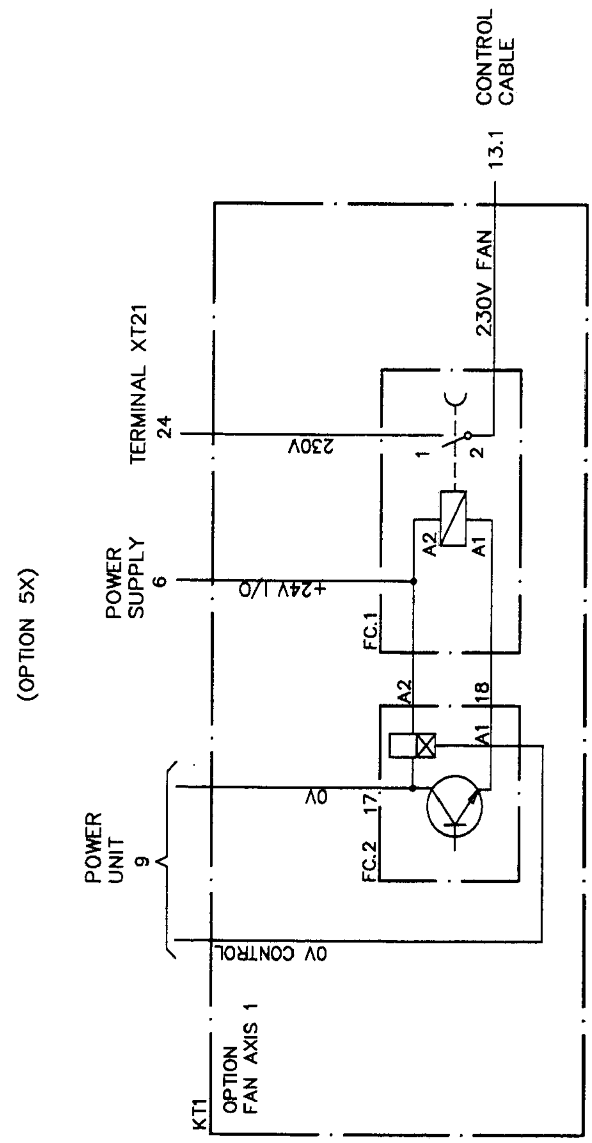

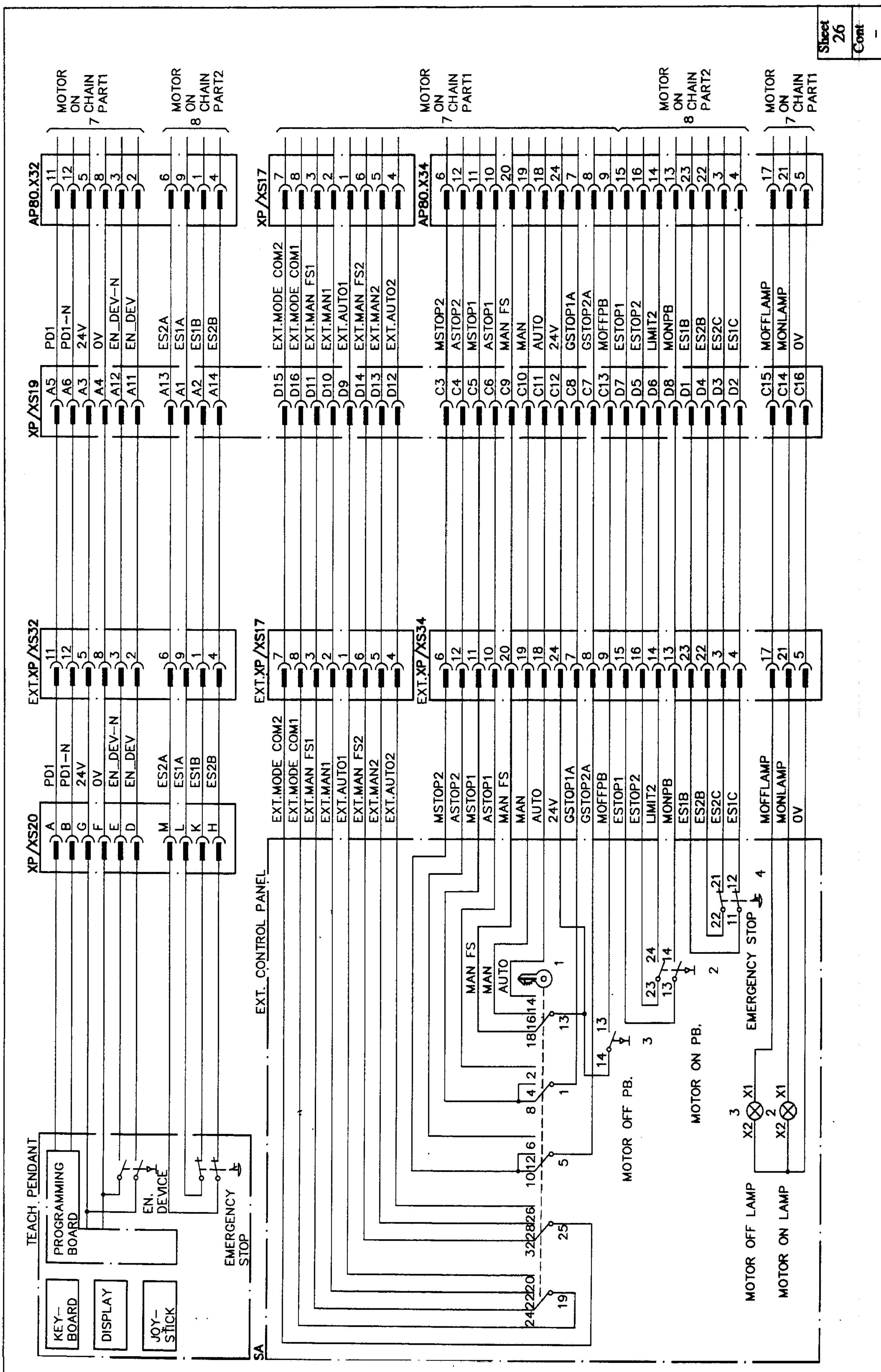

External control panel, option 182

Valid for/Gällande för
IRB 6400/2.4–120
2.4–150
2.8–100
3.0–75
2,8 PT
POKE
Mod. M94A

Sheet 101
Cont 102

List of contents

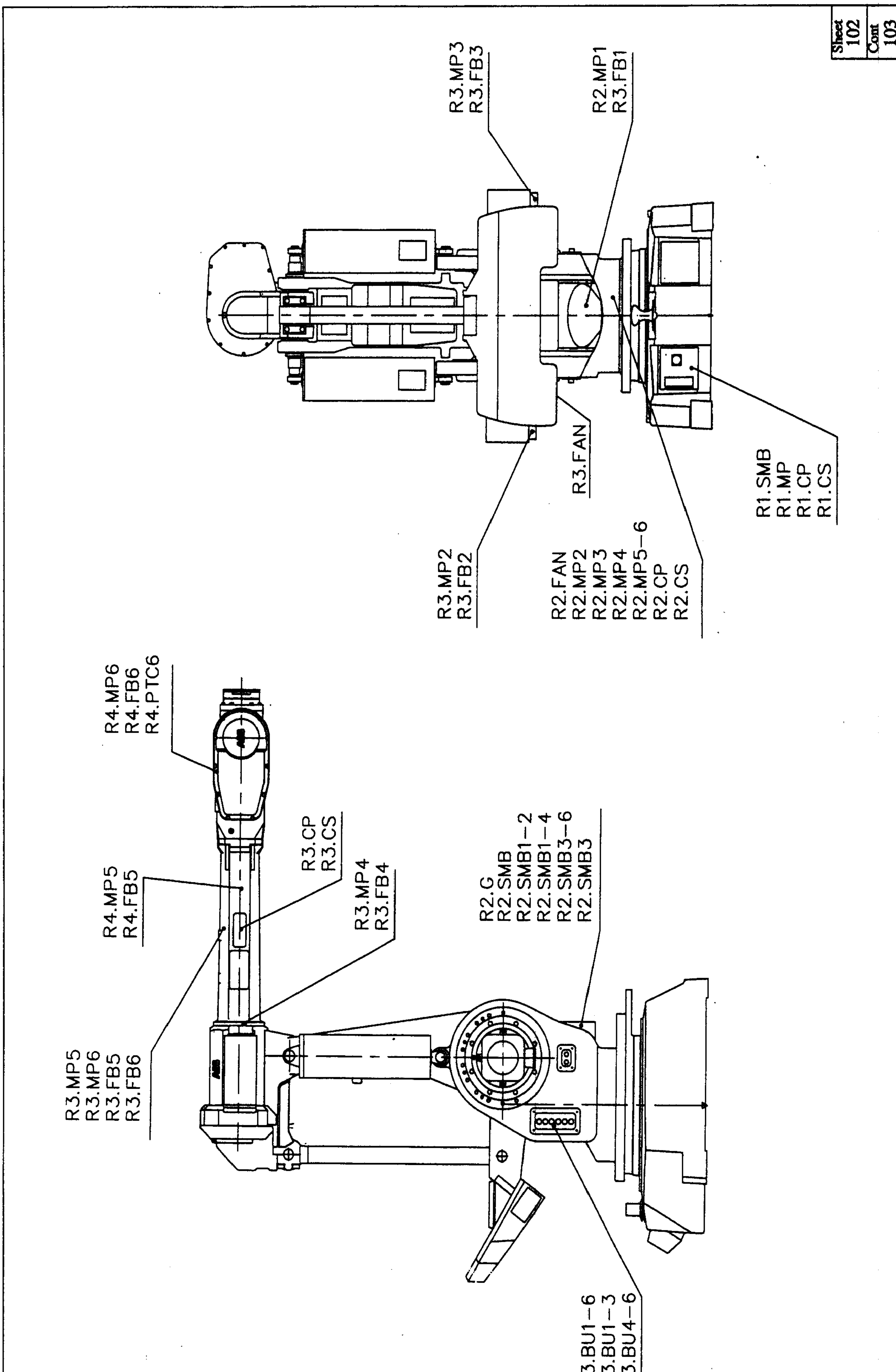

Location connection points

M	MOTOR MOTOR
B	BRAKE BROMS
PTC	TEMP SENSOR (PTC–resistor) TEMP GIVARE (PTC–motstånd)
R	RESOLVER RESOLVER
G	BATTERY PACK BATTERIENHET
BU	BRAKE RELEASE UNIT BROMSLOSSNINGSENHET
FB	FEED–BACK UNIT ÅTERFÖRINGSDON
SMB	SERIAL MEASURING BOARD SERIEMÄTKORT
FAN	FAN FLÄKT
	PROTECTIVE EARTH SKYDDSJORD
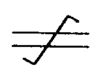	TWISTED CABLES TVINNADE LEDARE
	SCREENED CABLES SKÄRMADE LEDARE
	OPTIONAL FUNCTIONS TILLVALSFUNKTIONER
KEY PIN/STIFT	LOCATION PIN TO AVOID MISMATCH OF CONNECTOR NYCKELSTIFT FÖR ATT FÖRHINDRA FELANSLUTNING

Legend

Sheet 103
Cont 104

Sheet 104 Cont 105

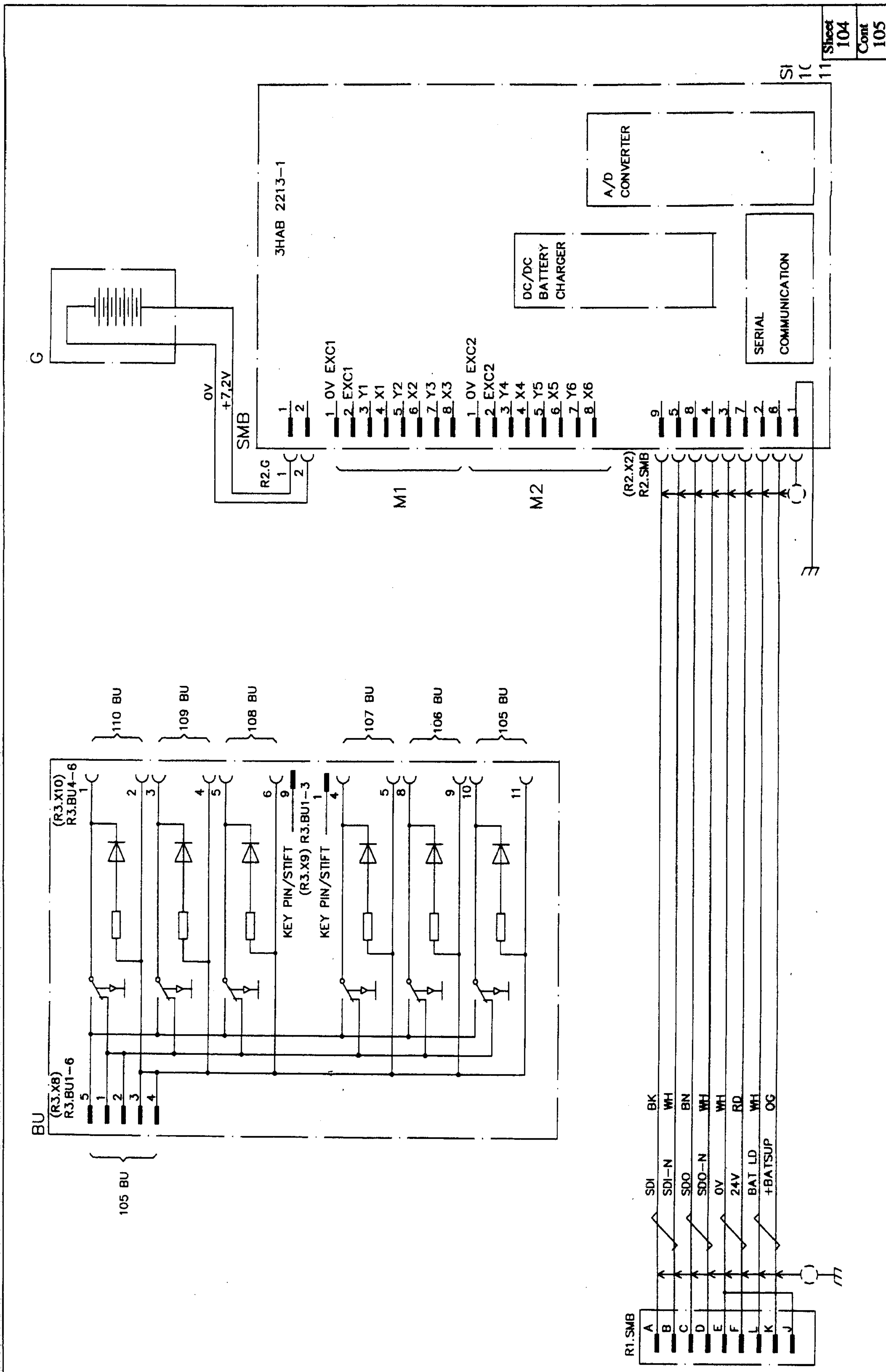

Brake release unit, serial measuring board

Circuit Diagram 3HAB 4247-1

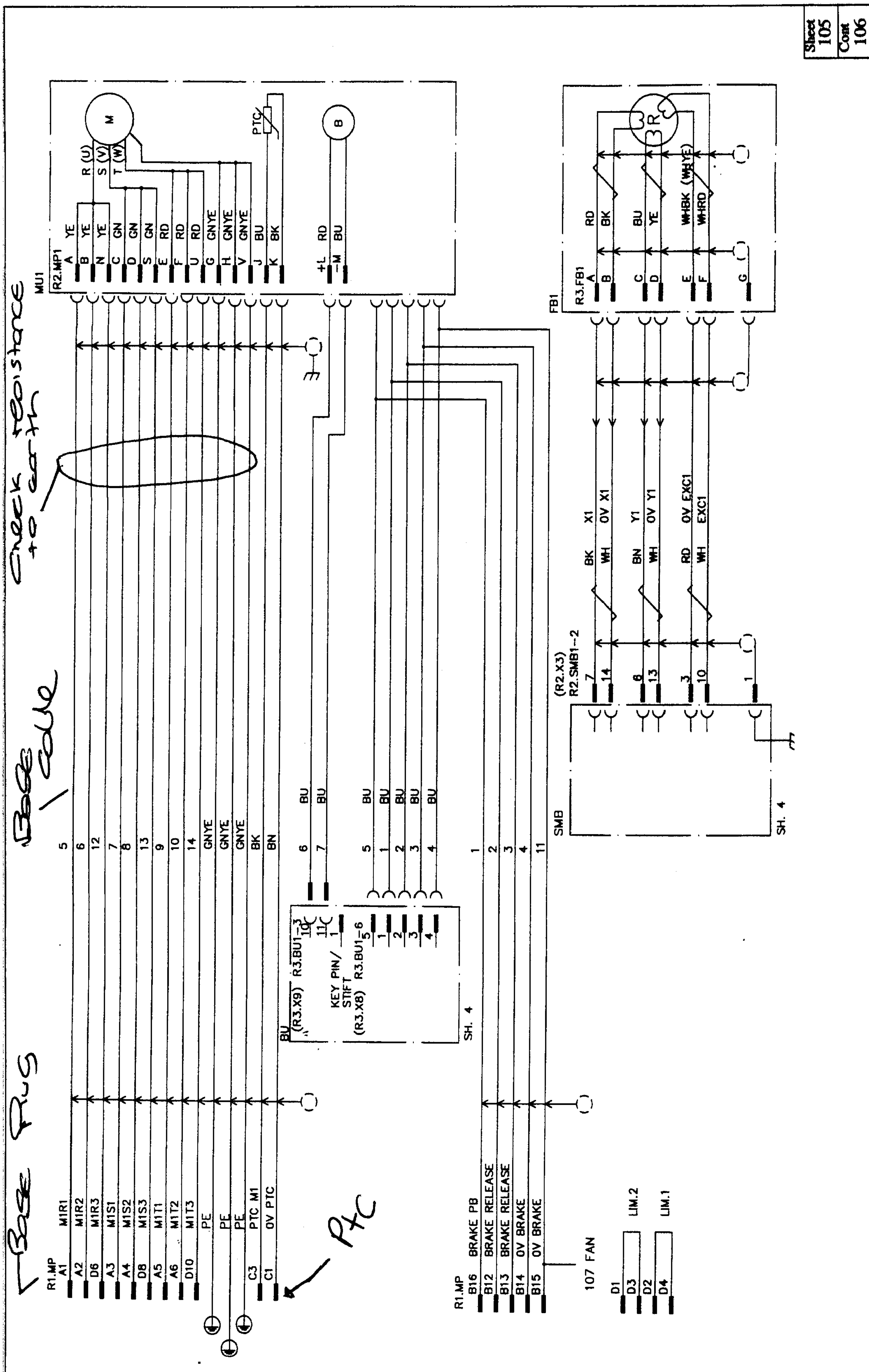

Axis 1

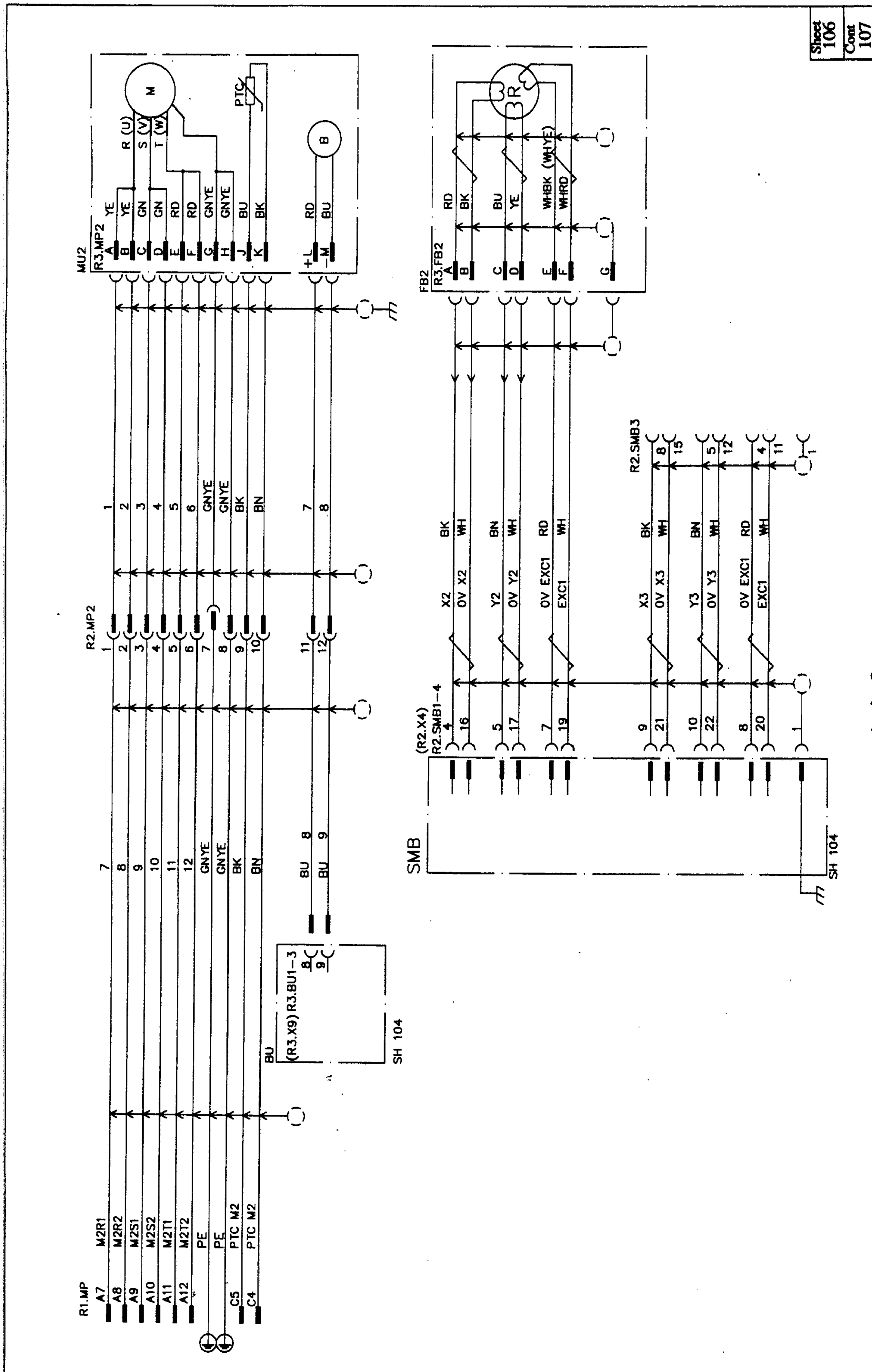
Sheet 106
Cont 107
Axis 2
MU2
R3.MP2
R2.MP2
R1.MP
FB2
R3.FB2
R2.SMB1-4
R2.SMB3
SMB
SH 104
BU
(R3.X9) R3.BU1-3

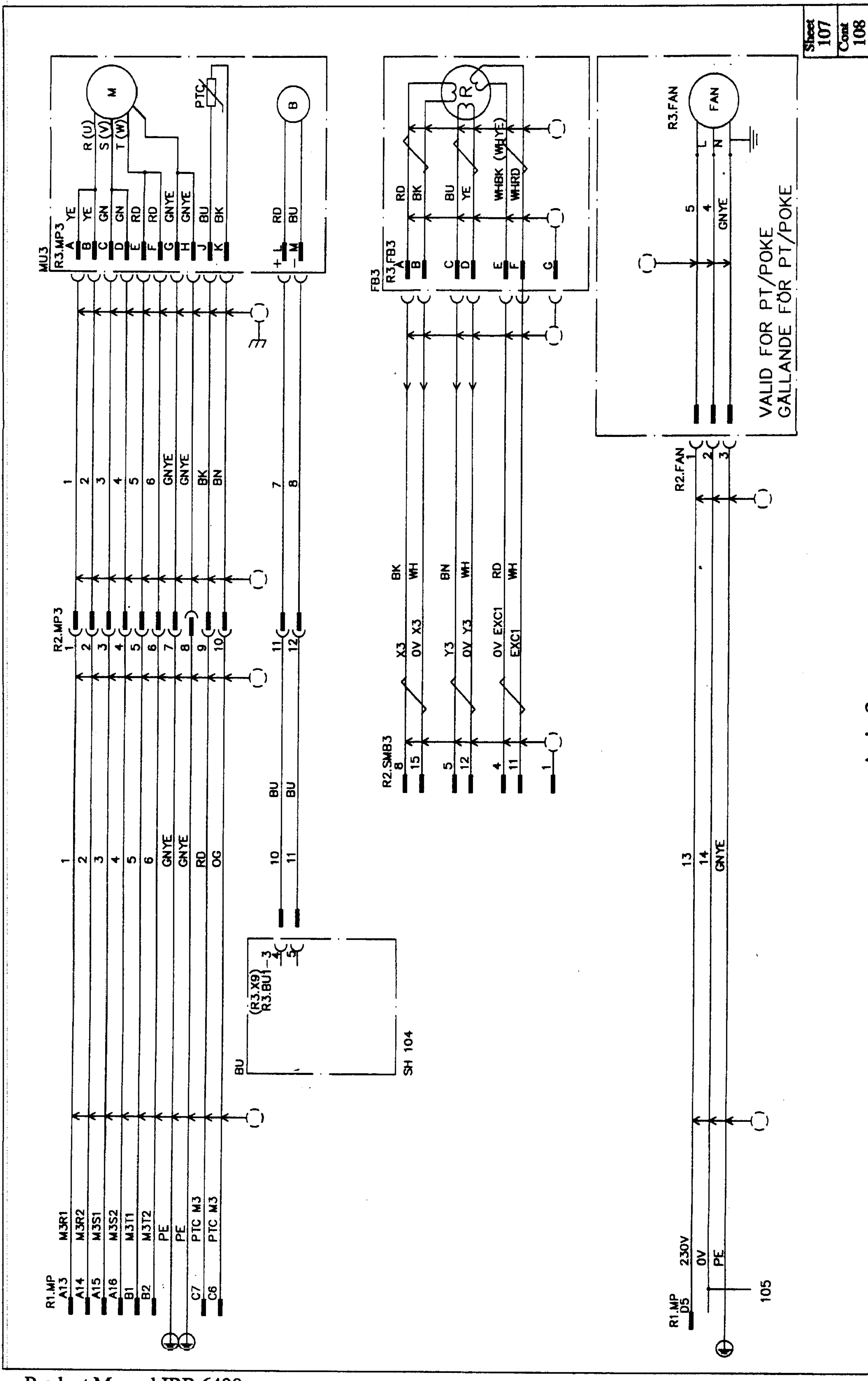
Sheet 107
Cont 108
Axis 3
VALID FOR PT/POKE
GÄLLANDE FÖR PT/POKE
R3.FAN
R2.FAN
R1.MP
R2.MP3
R3.MP3
MU3
FB3
R3.FB3
R2.SMB3
R3.BU1
(R3.X9)
SH 104
PTC
230V
0V
PE
105

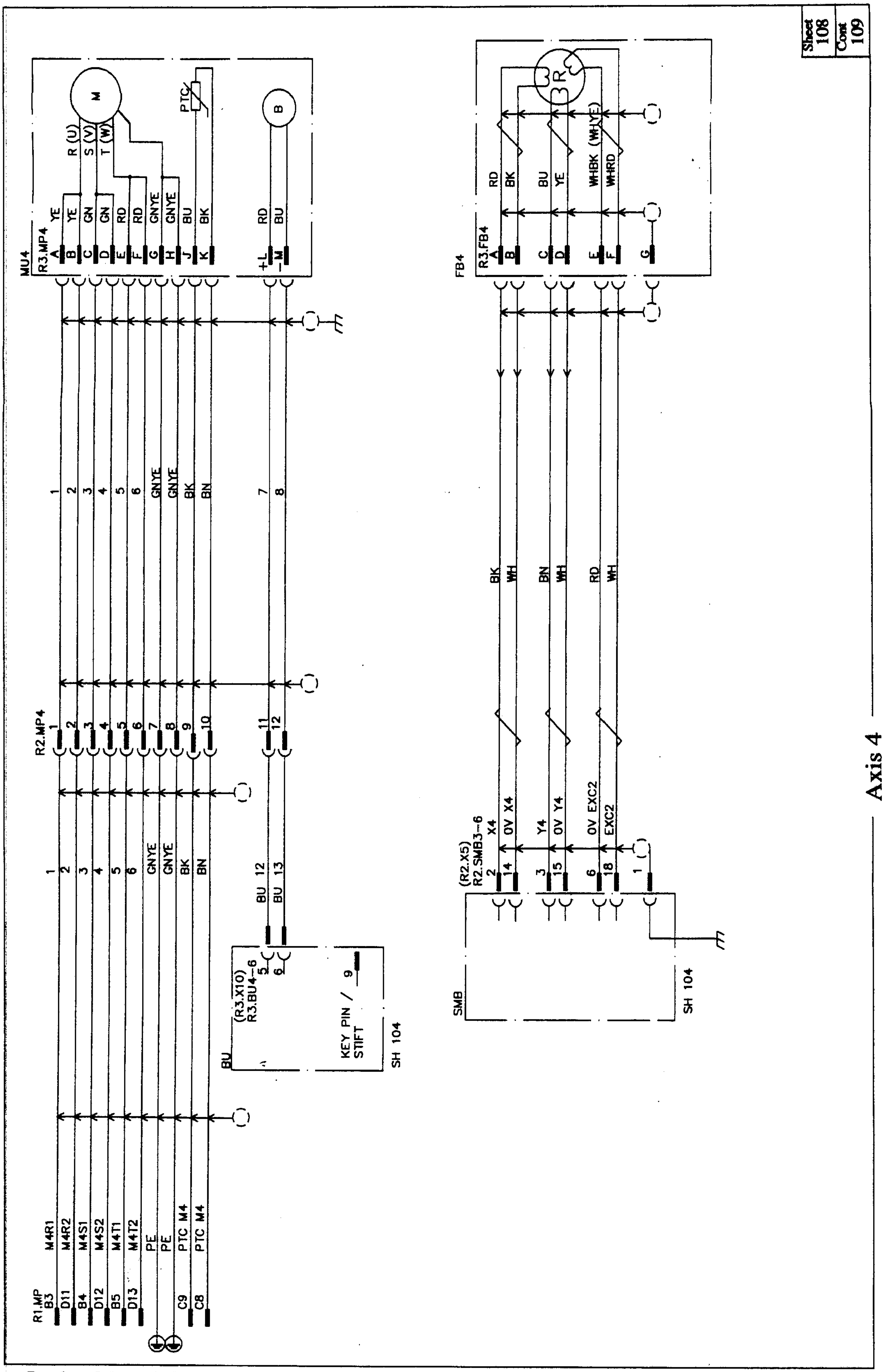
Sheet 108
Cont 109
Axis 4
MU4
R3.MP4
PTC
FB4
R3.FB4
R2.MP4
R1.MP
(R2.X5)
R2.SMB3–6
SMB
SH 104
BU
(R3.X10)
R3.BU4–6
KEY PIN / 9
STIFT
SH 104

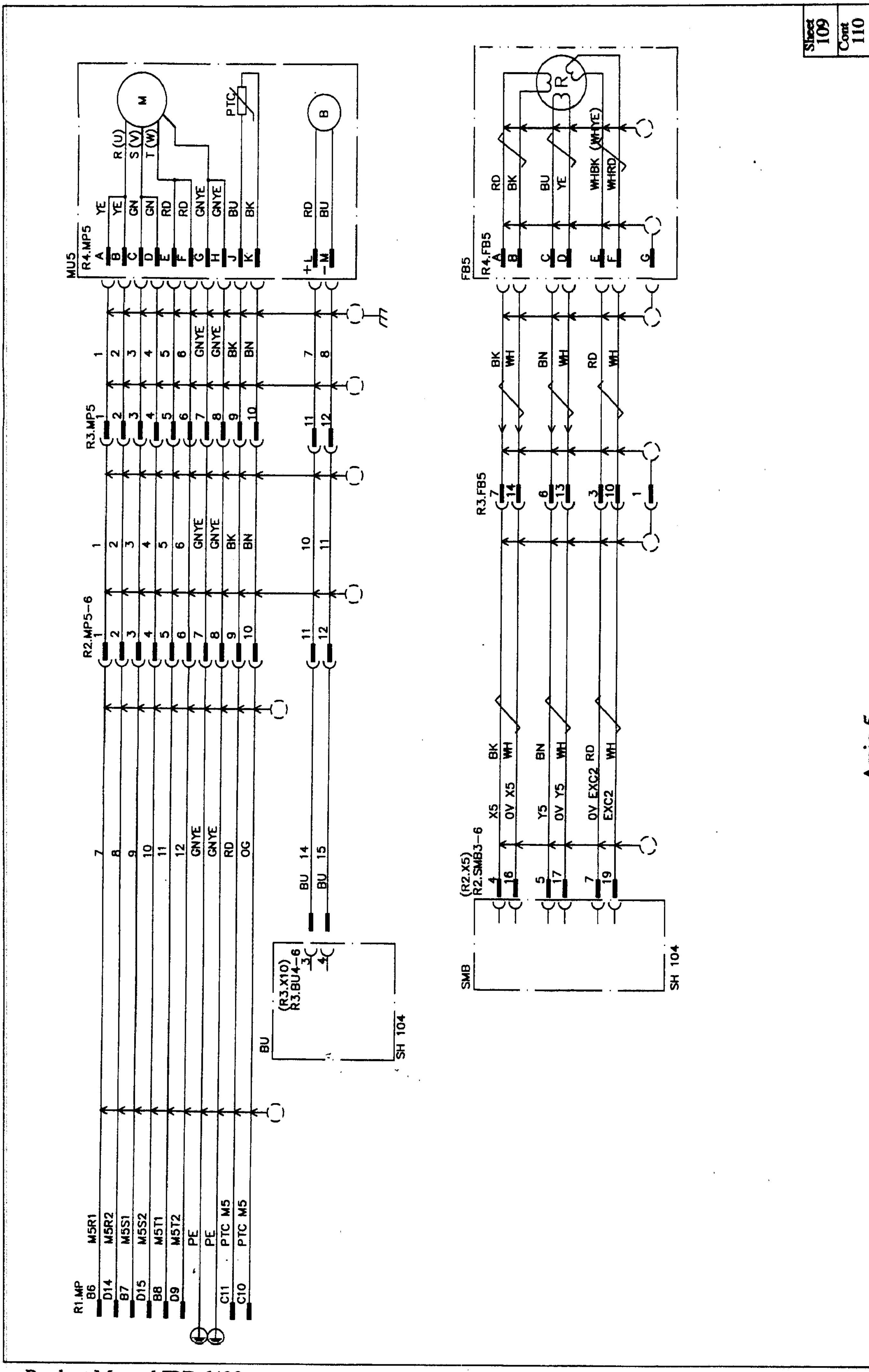
Sheet 109
Cont 110
Axis 5
MU5
R4.MP5
M
R (U)
S (V)
T (W)
PTC
B
YE
GN
RD
GNYE
BU
BK
+L
-M
R3.MP5
R2.MP5-6
BN
OG
R1.MP
B6 M5R1
D14 M5R2
B7 M5S1
D15 M5S2
B8 M5T1
D9 M5T2
PE
PE
C11 PTC M5
C10 PTC M5
BU
(R3.X10)
R3.BU4-6
SH 104
FB5
R4.FB5
R
WHBK (WHYE)
WHRD
WH
R3.FB5
(R2.X5)
R2.SMB3-6
X5
0V X5
Y5
0V Y5
0V EXC2
EXC2
SMB
SH 104

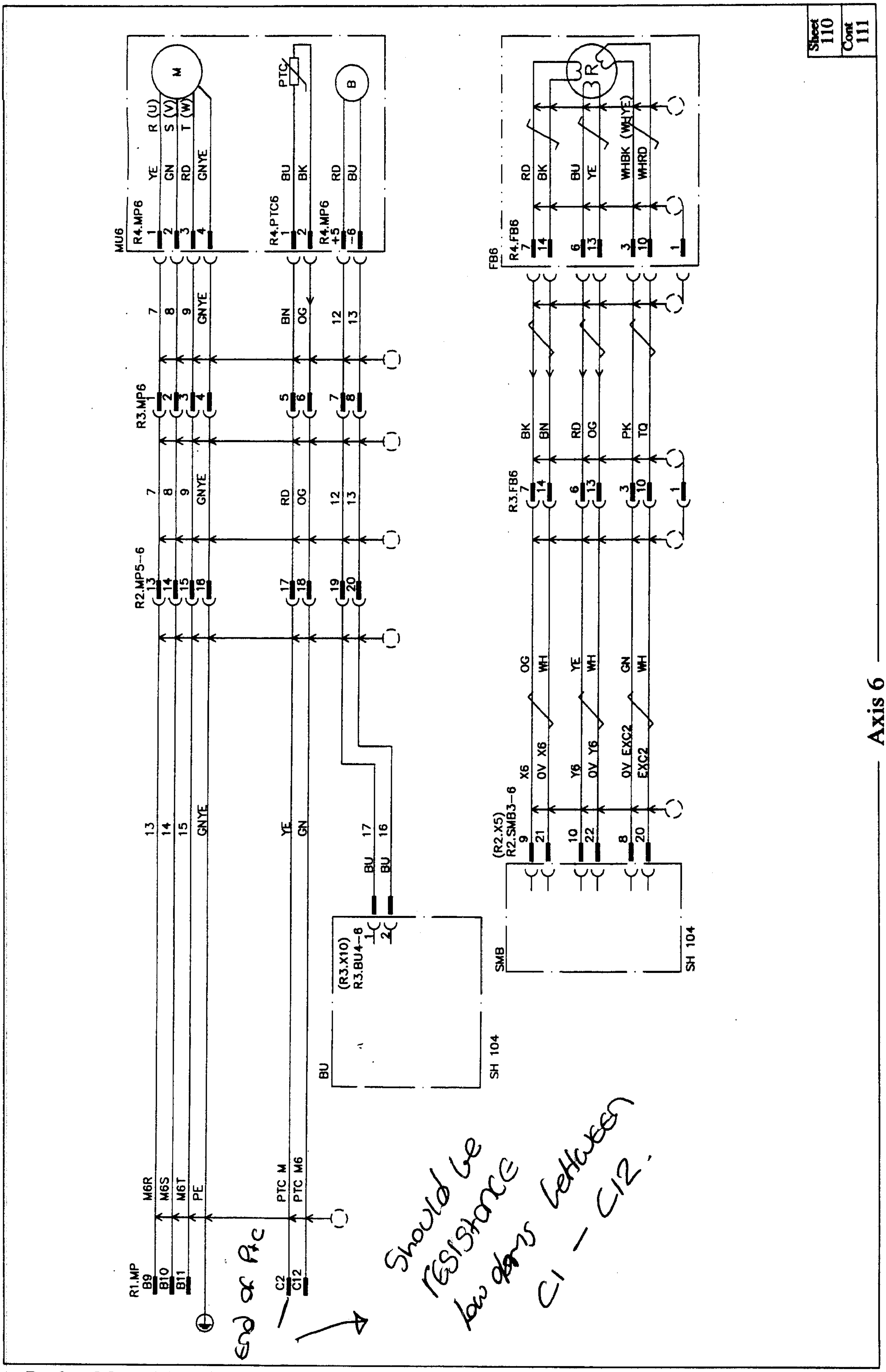

End of Ptc

Should be resistance low ohms between C1 – C12.

Sheet 111 Cont 112

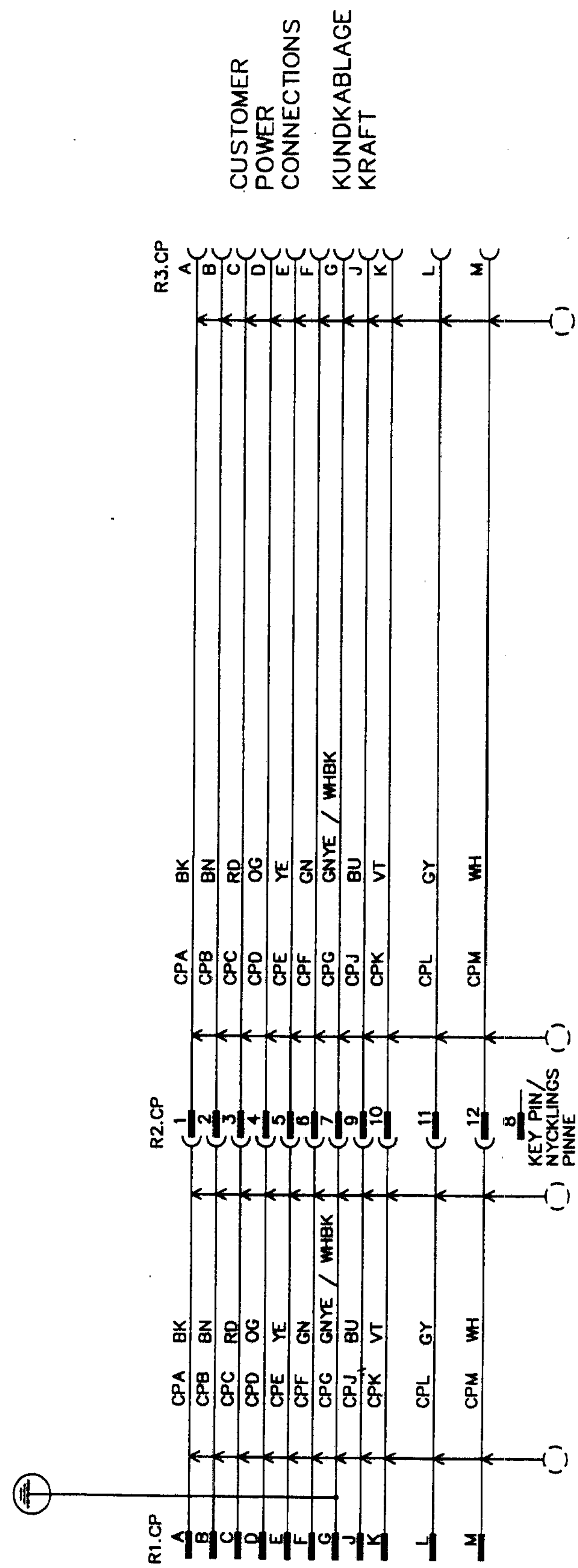

Customer power connections, fan (Only 2.8PT POKE)

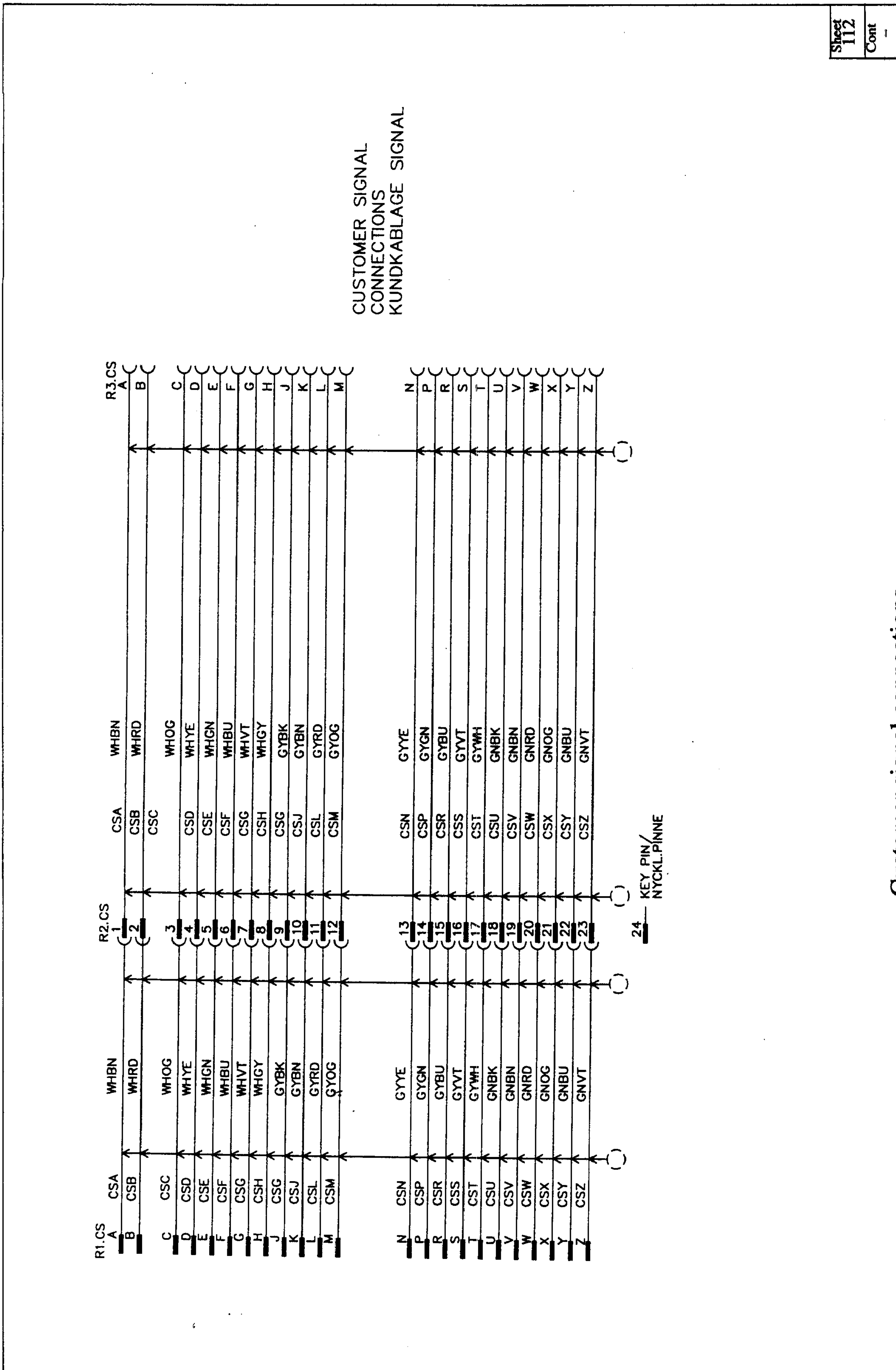

Customer signal connections

CONTENTS

CONTENTS

1 General Description

The industrial robot system IRB 6400 comprises two separate units; the control cabinet and the mechanical unit. The service of the mechanical unit is described in this document.

As regards service, the mechanical unit is divided into the following main parts:

- Electrical System
- Motor Units
- Mechanical System

The **Electrical System** is routed through the entire robot and consists of two major systems; power cabling and signal cabling. The power cabling feeds the robot axes' motor units. The signal cabling feeds the various controlling parameters like axis positions, motor revs, etc.

The AC type Motor Units provide the motive power for the various robot axes via gears. Mechanical brakes, electrically released, lock the motor units when the robot is inoperative for more than 3 seconds with automatic operation, or after 5 minutes with manual operation.

The **Mechanical System** has 6 axes, enabling the flexible robot motions.

Axis No. 1 rotates the robot via a frame. Axis 2, which provides the lower arm's reciprocating movement, is supported in the frame. The Lower Arm forms together with the Parallel Arm and the Parallel Bracket a parallelogram against the Upper Arm. The Parallel Bracket is mounted in bearings in the Parallel Arm and in the Upper Arm.

Axis No. 3 provides elevation of the robot's upper arm.

Axis No. 4, located in the Upper Arm, provides a rotary motion of the Upper Arm. The Wrist is bolted to the Upper Arm's forward end and comprises the axes Nos. 5 and 6. The latter axes form a cross.

Axis No. 5 provides a tilting motion and Axis No. 6 a turning motion. A connection is arranged for various customer tools at the front end of the wrist in the Turn Disc. The tool (or manipulator) can b equipped with pneumatic control via an external air supply (option). The signals to/from the tool can be supplied via internal customer connections (option).

The Control Cabinet must be switched off during all service work on the robot! Before doing any work on the robot measurement system (measurement board, cabling), the accumulator power supply must always be disconnected.

When service work is finished, the calibration position should always be checked with the system disc.

The Brake Release Unit should be connected as indicated in Chapter 7, Installation and Commissioning, section 2.5, to enable movements of the axes.

Special care must be taken when the brakes are operated manually. This applies particularly when the robot is started up, either for the first time or after a stoppage. The safety instructions in the Programming Manual must be complied with at all times.

1.1 Document Guidance

The subsequent chapters describe the type of service work that can be carried out by the Customer's own service staff on site. Certain types of work, requiring special experience or special aids, are not dealt with in this manual. In such cases, the defective module or component should be replaced on site. The faulty item should be sent to ABB Flexible Automation for service.

Calibration. Recalibration of the robot may have to be carried out after replacing mechanical unit parts or when the motor and feedback unit have been separated; or when a resolver error has occurred or the power supply between a measurement board and resolver has been interrupted. The procedure is described in detail in **Chapter 9, Calibration.**

IMPORTANT! When work is done on the robot signal cabling, this may result in the robot moving to incorrect positions.

After doing such work, it is important that the robot calibration position is checked as described in chapter 9.4. If a calibration fault is discovered, the robot must be recalibrated as described in chapter 9, Calibration.

Tools. Two types of tools are required for various service jobs involving dismantling; on the one hand, conventional tools like socket and ratchet spanners, etc.; on the other hand, special tools may be necessary, depending on what type of service is being carried out. The conventional tools are not dealt with in this manual, based on the assumption that the service personnel have sufficient technical basic competence. However, service work requiring the use of special tools is described in this manual.

Exploded views. In the Spare Parts chapter of this manual, there are a number of exploded view foldouts illustrating the robot parts, intended to facilitate quick identification of both the type of service required and the composition of the various components. The parts are item numbered on the foldouts. The foldouts are referred to in the Manual text within "arrow heads" (< >) as exploded view numbers. Where reference is made to foldouts, other than those specified in the paragraph title, the foldout number is included in the item number reference, for example <5/19> or <10:2/5>, the digit(s) before the stroke referring to the foldout number.

Numbers in brackets ( ) refer to figures in the text.

The foldouts also include information such as article number, designation and relevant data.

N.B. This manual is not to be considered as a substitute for a proper training course. This document is intended for use after the course has been completed.

1.2 Caution

The mechanical unit contains several parts which are too heavy to lift manually. As these parts must be moved with precision during any maintenance and repair work, it is important to have a suitable lifting device available.

The robot should always be switched to MOTORS OFF before allowing anyone to enter its working space.

1.3 Mounting Instructions for Bearings and Seals

1.3.1 Bearings

1. Let a new bearing remain in its wrapping until it is time for fitting, to avoid contamination of the bearing.

2. Ensure that all parts included in the bearing fitting are free from burrs, grinding waste and other contamination. Cast components must be free from foundry sand.

3. Bearing rings, inner rings and roller elements must under no circumstances be subjected to direct impact. Also, the roller elements must not be exposed to any stresses during the assembly work.

Tapered Bearings

4. The bearing should be tensioned gradually until the recommended pre-tension is achieved.

5. It is important to note that the roller elements must be rotated a specified number of turns before pre-tensioning is carried out, and also rotated during the pre-ten sioning sequence.

6. The above procedure must be carried out to enable the roller elements to adjust to the correct position against the race flange.7. Also, it is important that the bearing is properly aligned, as this will directly affect the lifespan of the bearing.

Greasing Bearings

8. The bearing must be greased after fitting. The main reason for this is the require ment for cleanliness. Good quality lubricating grease should be used, for example 1171 4012-201.

9. Grooved ball bearings should be filled with grease from both sides.

10. Tapered roller bearings and axial needle bearings shall be greased in the split condition.

11. The bearings must not be completely filled with grease. However, if space is available beside the bearing fitting, the bearing may be totally filled with grease when mounted, as surplus grease will be thrown out from the bearing when the robot is started up.
12. During operation, the bearing should be filled to 70-80% of the available volume.
13. Ensure that grease is handled and stored properly, to avoid contamination.

1.3.2 Seals

1. The commonest cause of leakage is incorrect fitting.

Rotating Seals

2. The sealing surfaces should be protected during transport and mounting.
3. The seal should be kept in the original wrappings or be well protected.
4. Sealing surfaces must be inspected before mounting. If scratches or damage are found, that may result in future leakage, the seal must be replaced.
5. Seals should also be checked before mounting to ensure that:
   - there is no damage to the sealing edge (feel with a fingernail)
   - the seal is of the correct type (provided with cutting edge)
   - there is no other damage.
6. Grease the seal just before fitting it, but not too early as there is a risk of dirt and foreign particles adhering to the seal. The space between the dust tongue and sealing lip should be filled to 2/3 with grease of quality 1171 4012-201. The rub ber coated external diameter must also be greased.
7. The fitting of seals and gears must be carried out on clean workbenches.
8. Mount the seal correctly. If it is misaligned, there is a risk of leakage due to the pumping effect.
9. Always mount the seal with a mounting tool. Never hammer directly on the seal, as this may result in leakage.
10. Use a protective sleeve for the sealing lip during mounting, when sliding over threads, keyways, etc.

Flange Seals and Static Seals

11. Check the flange surfaces. They must be even and free from pores. It is easy to check flatness using a gauge on the fastened joint (without sealing compound).

12. Differences in surface level or the presence of burrs due to incorrect machining are not permissible. If flange surfaces are defective, the parts must not to be used, because leakage could result.

13. The surfaces must be properly cleaned in accordance with ABB ROBOTICS PRODUCTS recommendations.

14. Distribute the sealing compound evenly over the surface, preferably with a brush.

15. Tighten the screws evenly when fastening the flange joint.

O-rings

16. Check the O-ring grooves. The grooves must be geometrically correct and free from pores and contamination.

17. Check the O-ring with regard to surface defects, burrs, shape accuracy, etc.

18. Ensure that the correct O-ring size is used.

19. Tighten the screws evenly when assembling.

20. Defective O-rings and O-ring grooves must not be used.

21. Fitting defective parts will result in leakage. Grease the O-ring with lubricant 1171 4012-201 before mounting.

1.4 Instructions for Tightening Screw Joints

General

It is of the utmost importance that all screw joints be tightened with the correct torque.

Application

The following tightening torques are to be used for all screw joints in metallic materials unless otherwise specified in the text.

These instructions do not apply to screw joints comprising soft or brittle materials.

For screws with a higher property class than 8.8, the data for 8.8 must be used unless otherwise specified.

Screws treated with Gleitmo (lubricated)

All screws in the manipulator that are tightened to a specified torque are treated with Gleitmo.

When handling screws treated with Gleitmo, protective gloves of nitrile rubber type should be used.

Screws treated with Gleitmo can be unscrewed and screwed in again 3-4 times before the slip coating disappears. Screws can also be treated with Molycote 1000.

When screwing in new screws that are not Gleitmo treated, these should first be lubricated with Molycote 1000 and tightened to the specified torque.

Assembly

Screw threads with dimension M8 or larger should preferably be lubricated with oil. Lubrication with molybdenum disulphide grease (Molycote 1000) should only be used when specified in the text.

Screws lubricated with Molycote 1000 and then torque tightened, should also to be lubricated between the washer and the head of the screw.

Screws with dimension M8 or larger should be tightened with a torque-wrench, if possible.

Screws with dimension M6 or smaller may be tightened to the correct torque using tools without torque indication, by personnel with adequate mechanical training and instruction.

1.5 Tightening Torques

Screws with slotted or cross recessed head, property class 4.8

Dimension	Tightening torque - Nm
	without oil
M2.5	0.25
M3	0.5
M4	1.2
M5	2.5
M6	5.0

Screws with hexagon socket head, property class 8.8

Dimension	Tightening torque - Nm	
	without oil	with oil
M3	1	1
M4	2	2
M5	5,5	4
M6	10	9
M8	24	22
M10	48	45
M12	83	78
M16	200	190
M20	410	400
M24	750	740

2 Axis 1

2.1 Replacement of motor

Refer to foldout no. 1:1.

Dismounting:

Be careful not to tap or hit the shaft axially, nor displace the shaft axially in any way, as this could give rise to an incorrect air gap in the brake.

1. Remove the cover in the frame between axes 2 and 3.
2. Disconnect connectors R2.MP1 and R2.FB1 on the motor.
3. Unscrew the motor flange, 4 screws <9>. Use two screws in the threaded holes (M8) on the motor flange, to loosen the motor.
4. Loosen screw <15>, fit a 150 mm screw, and pull off the gear with the help of a puller.

Mounting:

5. Mount a threaded pin in the motor shaft and press the gear on to the shaft, with a nut and washer. Mount screw <15> through the gear, torque 70 Nm, Loctite 242.

Avoid axial force through the bearings in the motor.

6. Ensure that assembly surfaces are clean and unscratched.
7. Apply sealing liquid Permatex 3 under the motor flange.
8. Mount the motor, grease screw <9> with Molycote 1000 and tighten with a torque of 50 Nm.
9. Calibrate the robot as described in Chapter 9, Calibration.

Tightening torque:

Screws for motor, item 9:	50 Nm.
Screw for motor gear, item 15:	70 Nm.

2.2 Cabling axis 1

Dismounting:

Refer to foldout 1:1, 1:3 and 2.

1. Place axis 1 in calibration position 0. Shut down the robot system with the mains switch.

2. Loosen the control cable connectors in the robot base.

3. Loosen the covers <1:1/21, 22> on base cabling from the base by unscrewing screws <1:1/18>.

4. Loose the support rail <2/3>, screws <2/6> and remove it forward in a location away from the base cabling as much as possible.
   Do not remove the screws!

5. Loose the base cabling at the bottom of the base <2/6>.
   Do not remove the screws!

6. Tighten all screws <2/6> again after that the cabling is removed.

   To avoid that the base plate <2/2> rotates and to make dismounting and mounting of the cabling easier.

7. Take out the cover <1:1/21> and disconnect the earth wire from the contact plate in the base.

8. Loose the base cabling at the frame, screws <1:3/25>. The screws must be removed.

9. Loose the cover over axis 1 motor, the brake release unit and the seriel measurement board.

   Caution!
   The seriel measurement board is an electrostatic sensitive device.
   Use wrist strap.

10. Disconnect the contacts to the base cabling in the frame:

R2.SMB(X2)	
R2.CP	(only in the case, customer connection)
R2.CS	(only in the case, customer connection)
R2.MP1	
R2.MP2	
R2.MP3	
R2.MP4	
R2.MP5-6	
R2.FAN	(connected only for POKE and PT)
R3.BU1-6(X8)	
R3.BU1-3(X9)	

R3.BU4-6 (X10)

Air hose (shall be loosened at the nipple on the base and the nipple in the frame, only in the case, customer connection)

11. Feed the cabling carefully through the hole in the left side of the base.

Mounting:

12. Feed the cable inside the base through the hole on the left side. The robot should be positioned in calibration position 0. Pull the cables through the hole in the frame and pull out connectors to their correct positions.
13. Mount the screws <1:3/25> with washers <1:3/26> which holds the cabling to the frame. Add Loctite 242 and tighten.
14. Connect all contacts inside the frame and at the brake release unit and seriel measurement board. Mount the brake release unit and seriel measurement board, use Loctite 242.
15. Connect the earth wire.
16. Unscrew screws <2/6> approx. 8 mm. See foldout 2.
17. Place the cover <1:1/21> in position.
18. Place the cabling in position on the bottom of the base.
19. Remove screws <2/6>, which keeps the cabling fixed to the bottom of the base, one at the time and add Loctite 242 and tighten it.
20. Mount support rail <2/3>. Add Loctite 242 and tighten.
21. Assembly all covers, use Loctite 242.

    Note! All removed straps must be remounted.

2.3 Replacing the gearbox

Refer to foldout no. 1:1, 3:1 (3:2, S /2.9-120).

Dismounting:

1. Dismount motor and the cabling, as described in Chapter 2.1, Replacement of motor and Chapter 2.2, Cabling axis 1.
2. Disconnect the cables and the air hose that comes through the lower arm, and is connected to the frame.
3. Attach a hoist in existing lifting eye bolts.

   For instructions about lifting, see Chapter 7, Installation and Commissioning, depending on which type of robot is to be lifted.

To facilitate dismounting, it is essential that the arm system is evenly balanced. Move the lower arm slightly backwards and allow the upper arm to move down as far as possible, in order to concentrate the centre of gravity as close as possible. If there is any load on the wrist, or any other equipment, the positioning may be affected.

4. Unscrew screws <1:1/43, 45> for the gear. Accessible through holes in the frame.

5. Remove screws <1:1/6> holding the joint bearing.

6. Lift the arm system straight up.

7. Place the arm system on some kind of support.

Make sure that the arm system is properly supported, so that the gearbox can be safely removed.

8. Loosen screws <3:1/6> for the gearbox.

Mounting:

9. Mount two guide pins, M12x200 under the frame, to facilitate mounting of the friction ring and gear.

10. Fit O-ring <3:1/11>, friction ring <3:1/13> and gear <3:1/12>. Apply Molycote 1000 on the screws <3:1/6> and tighten with a torque of 120 Nm.

11. Mount two guide pins, M12x300 in the manipulator base.

12. Mount O-ring <1:1/12> at the bottom in the base.

13. Lift the arm system and then lower it carefully until the joint bearing is just about to enter the bearing seat.

14. Align the holes in the bearing <3:1/2> with the holes in the base, with two screws.

15. Lower the arm system.

16. Apply Loctite 577 on screws <1:1/43, 45>. Do not tighten the screws. Rotate the gear approx. 10 turns (input shaft) forwards and backwards, using the tool 3HAB 1067-6. Tighten first screws <1:1/43> with a torque of 300 Nm and then screws <1:1/45> with a torque of 120 Nm.

    Note! The sequence when tightening the screws.

17. Mount screws <1:1/6>, lubricate with Molycote 1000 and tighten with a torque of 120 Nm.

18. Mount motor and cabling as described in Chapter 2.1, Replacement of motor and Chapter 2.2, Cabling axis 1.

19. Calibrate the robot as described in Chapter 9, Calibration.

Tightening torque:

Screw joint gear/base, item 43:	300 Nm
Screw joint gear/base, item 45:	120 Nm
Screw joint gear/frame, item 3:1/6:	120 Nm
Screw joint bearing/base, item 1:1/6:	120 Nm

2.4 Dismounting joint bearing

Refer to foldout 3:1 (3:2, S /2.9-120).

Dismounting:

1. Dismount the arm system as described in Chapter 2.3, Replacing the gearbox.

2. Unscrew screws <3> and remove the joint bearing.

Mounting:

3. Apply grease to the bearing seat and push it on with screws <3>. Lubricate screws with Molycote 1000 and tighten with a torque of 120 Nm.

4. Refit the arm system as described in Chapter 2.3, Replacing the gearbox.

Tightening torque:

Screw joint bearing, item 3: 120Nm.

2.5 Dismounting cooling axis 1

Refer to foldout 12.

Dismounting:

1. Dismount cover <11> in the frame between axes 2 and 3.

2. Disconnect fan cabling <12>, R2.FAN.

3. Remove the filter holder.

4. Loosen and remove the fan <1>.

Mounting:

5. Mount in reverse order.

3 Axis 2

3.1 Replacing motor

Refer to foldout 4:1, 4:2.

Dismounting:

Be careful not to tap or hit the shaft axially, nor displace the shaft axially in any way, as this could give rise to an incorrect air gap in the brake.

1. Move the lower arm to the position where it is possible to secure the arm with screws, through the holes for the lower fixing points of the balancing springs.
2. Disconnect connectors R3.MP2 and R3.FB2.
3. Attach a hoist to the motor, which is rather heavy.
4. Loosen the screws <1.31> for the motor.
5. Pull out the motor.
6. Unscrew screw <1.30> and mount a screw 150 mm long and pull off the gear with a puller.

Mounting:

7. Fit a fully threaded pin in the motor shaft and press the gear on to the shaft with a nut and a washer. Mount screw <1.30> through the gear, torque 45 Nm, Loctite 242.

This is to avoid axial force through the bearings in the motor.

8. Ensure that assembly surfaces are clean and unscratched.
9. Mount O-ring <1.28> using some grease.
10. Mount motor, lubricate screws <1.31> with Molycote 1000 and tighten with a torque of 50 Nm.

Do not forget to remove the locking screws in the lower arm!

11. Calibrate the robot as described in Chapter 9, Calibration.

Tightening torque:

Screws for motor, item 1.31:	50 Nm
Screw for gear, item 1.30:	45 Nm

3.2 Replacing the gearbox

Refer to foldout 4:1, 4:2.

Dismounting:

1. Remove motor as in Chapter 3.1, Replacing motor.
2. Unscrew screws <1.38.2> and remove the motor socket <1.38.1>.
3. Mount 2 guide pins, M12, through the gearbox.
4. Loosen the screws <1.5> and <1.7>.
5. Pull the gearbox <1.3> out, suspended on the guide pins.

Mounting:

6. Clean the surfaces in the frame, lower arm and gearbox.
7. Mount 2 guide pins, M12.
8. Mount friction rings <1.16, 1:37> and O-ring <1.4>.
9. Put the gearbox <1.3> on the 2 guide pins and place the friction ring <1.16> on to the gearbox.
10. Mount screws <1.5> and <1.7>, lubricate with Molycote 1000 and tighten screw <1.7> with 300 Nm and screw <1.5> with 120 Nm.
11. Mount O-ring <1.14>.
12. Suspend the motor socket on the 2 guide pins.

Note the position of the magnetic plugs.

13. Mount screws <1.38.2>, lubricate with Molycote 1000 and tighten with a torque of 120 Nm.
14. Mount motor as described in Chapter 3.1, Replacing motor.

Tightening torque:

Screw joint gear box/lower arm, item 1.7:	300 Nm
Screw joint gear box/lower arm, item 1.5:	120 Nm
Screw joint motor socket/frame, item 1.38.2:	120 Nm

3.3 Replacing lower arm

Refer to foldout no. 5:1, 6, 8 (foldout 5:2 for robots with serial number IRB 6400 0001-0048).

Dismounting:

1. Run the lower arm to the position where it is possible to secure the arm with screws, through the holes for the lower fixing points of the balancing springs.
2. Dismount the balancing weight for axis 3.
3. Attach a hoist to the upper arm.
4. Remove the clamps <5:1/1.2.2> (<*5:2/1.11.2*>) and <8/31.32> and lift the parallel bar away.
5. Remove the cables in the lower arm as described in Chapter 3.8, Dismounting cables, lower arm/upper arm.

Do not remove the cables from the upper arm.

6. Dismount the upper arm as described in Chapter 4.6, Dismounting upper arm, complete.
7. Dismount the two balancing springs <6/1.51, 1.53> according to Chapter 3.6, Dismounting balancing springs or Chapter 3.7, Dismounting balancing springs (S / 2.9-120).
8. Attach a hoist to the under arm.
9. Dismount motor and gearbox for axis 2 as described in Chapter 3.2, Replacing the gearbox.
10. Dismount motor and gearbox for axis 3 as described in Chapter 4.2, Replacing gearbox.
11. Remove the 2 locking screws for the lower arm and gently lift the lower arm together with the parallel arm, straight up.
12. Dismount the parallel arm as described in Chapter 4.3, Dismounting parallel arm.

Mounting:

13. Mount the parallel arm as described in Chapter 4.3, Dismounting parallel arm.
14. Lift the lower arm with mounted parallel arm in position.
15. First mount the motor and gearbox for axis 2, as in Chapter 3.2, Replacing the gearbox.
16. Then mount the motor and gearbox for axis 3 as in Chapter 4.2, Replacing gearbox.

17. **Secure the lower arm with the locking screws.**

18. Mount the upper arm as in Chapter 4.6, Dismounting upper arm, complete.

19. Mount the parallel bar as in Chapter 4.5, Replacing parallel bar with bearings.

20. Mount the cables as in Chapter 3.8, Dismounting cables, lower arm/upper arm..

21. Mount the balancing weight for axis 3, lubricate screws <6/2.142> (2.023.2) with Molycote 1000 and tighten with 300 Nm.

22. Mount the balancing springs for axis 2 as in Chapter 3.6, Dismounting balancing springs or Chapter 3.7, Dismounting balancing springs (S /2.9-120).

Do not forget to remove the locking screws!

23. Calibrate the robot as described in Chapter 9, Calibration.

Tightening torque:

Screw joint balancing weight/parallel arm, item 6/2.142 (2.203.2): 300 Nm

3.4 Replacing bearing in lower arm

Refer to foldout no. 5:1.

Dismounting:

1. Remove the lower arm as in Chapter 3.3, Replacing lower arm.

2. Place the lower arm on a workbench or similar.

3. Dismount the parallel arm as in Chapter 4.3, Dismounting parallel arm.

4. Remove the bearings <1.3> with a puller.

Mounting:

5. Mount the spacer <1.4>.

6. Heat up the bearing <1.3> to max. 120°C before mounting it on the parallel arm <1.2>.

7. Mount parallel arm as in Chapter 4.3, Dismounting parallel arm.

8. Mount lower arm as in Chapter 3.3, Replacing lower arm.

3.5 Replacing bearing in lower arm
(Only for robots with serial number IRB 6400 0001-0048.)

Refer to foldout no. 5:2.

Dismounting:

1. Remove the lower arm as in Chapter 3.3, Replacing lower arm.
2. Place the lower arm on a workbench or similar.
3. Dismount the parallel arm as in Chapter 4.3, Dismounting parallel arm.
4. Take out the intermediate ring <1.2> together with the bearing.
5. Remove the 3 stop screws <1.16>. Insert screws and press out the bearing <1.3>.

Mounting:

6. Heat up the bearing <1.3> to max. 120°C before mounting it on the intermediate ring <1.2>.
7. Mount the X-ring <1.4>, applying some grease.
8. Mount the sealing ring <1.5> and O-ring <1.10> using some grease.
9. Mount the intermediate ring with the bearing in the lower arm. Use a punch through the holes for the stop screws <1.16> and gently tap on the outer ring of the bearing.
10. Insert the 3 stop screws <1.16>. Lock with Loctite 242, use Super Clean 706 and Activator N.
11. Mount the parallel arm as in Chapter 4.3, Dismounting parallel arm.
12. Mount the lower arm as in Chapter 3.3, Replacing lower arm.

3.6 Dismounting balancing springs

Refer to foldout no. 6.

Dismounting:

1. Move the lower arm to the position where it is possible to secure the arm with screws, through the holes for the lower fixing points of the balancing springs.
2. Insert an M10 screw at the top of the cylinder so that you feel a mechanical stop. The length of the cylinder is now locked.
3. Attach a hoist to the balancing spring.

Make sure that the shaft between the upper and lower arms does not rotate when unscrewing the KM-nut. The KM-nut is locked with Loctite 242.

4. Remove the KM nuts <2.102> with KM socket, size 4-KM 6.

5. Pull out the cylinder with the help of a puller.

Mounting:

6. Insert an M10 screw at the top of the cylinder to adjust the length.

7. Mount ring <1.51.2> (<1.53.4> for S /2.9-120) on the shafts. Turn the rings as shown in the figure. Apply grease to the side facing towards you.

   Paragraphs 8 - 10 valid only for S /2.9-120.

8. Apply grease on washer <1.53.3>, both sides. Mount on shaft as shown in Figure 1.

9. Mount the cylinder, upper end first. *Valid for both versions.*

Do not knock the bearing to the end position before the lower part has been lined up on to the shaft.

10. Mount outer washer <1.53.3> (greased) and ring <1.53.2>.

11. Mount nut <2.102>. Tighten the KM-nut, use Loctite 242.
    Turn the KM-nut depending on robot version, see Figure 1.

12. **Remove the M10 screw at the top of the cylinder.**

Do not forget to remove the locking screws in the lower arm!

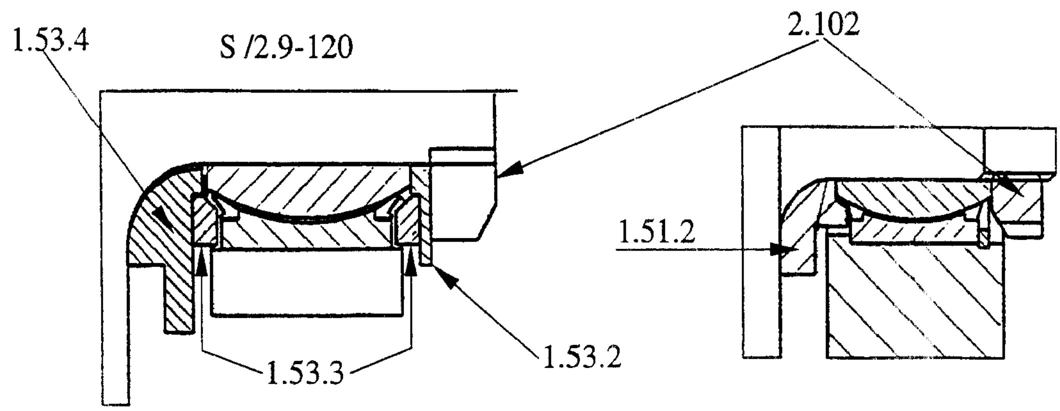

Figure 1 Mounting of the balancing springs.

3.7 Dismounting balancing springs (S /2.9-120)

Refer to foldout no. 6.

Dismounting:

1. Move the lower arm to the uppermost position (the arm points straight up).

The mechanical stop for axis 2 can be moved, as a safety measure, so that the lower arm is mechanically locked in its position.

2. Dismount according to Chapter 3.6, Dismounting balancing springs.

Mounting:

3. Mount according to Chapter 3.6, Dismounting balancing springs.

Do not forget to refit the mechanical stop for axis 2!

3.8 Dismounting cables, lower arm/upper arm.

Refer to foldout nos. 1:1, 4:1, 4:2, 5:1, 7:1, 7:2, 8, 10:1, 13:1, 13:2.

Dismounting:

1. Disconnect connectors R2.MP4, R2.MP5-6, R2.CP, R2.CS) inside cover <4:1 (4:2) /2.121> in the frame.

2. Disconnect connector R2.SMB4-6(X5) on the serial measurement board <4:1 (4:2) /2.119>, located in the frame.

3. Remove the small covers in the cover <4:1 (4:2) / 2.112> and feed the cables gently out from the frame. Take the cables through the hole in the plate. Loosen the air hose.

4. Remove the hood <8/106> and unscrew the holder <8/38>.

Make a written note of the relative positions and order of the cables and air hose, to facilitate refitting in the correct way. See foldout 13:1, 13:2.

5. Remove the cable clamps at the top of the lower arm and on the underside of the upper arm with screws <13:2/2.177>. Leave the clamps on the cabling to keep the right distance between the fixing points when remounting.

6. Disconnect the air connection and customer connectors (R3.CP, R3.CS) on the right side of the upper arm.

7. Disconnect connectors (R3.MP4, R3.FB4) on motor axis 4.

8. Loosen the connector box on the left side of the upper arm, remove the angle bracket <7:1 (7:2)/37> from the box and from the tube shaft.

9. Remove the cover to axis 6. Dismount connectors (R3.MP6, R3.FB6) in the box.

10. Pull the cables backwards and put a hand inside the upper arm and loosen the connectors (R4.MP5, R4.FB5) from the motor axis 5. Pull out the cables through the upper arm, feed at the same time the cables up from the lower arm.

Mounting:

11. Mount in reverse order.

Adjust the length of the cable between the cable clamps <13:2/2.177> at the top of the lower arm and the clamps <13:2/2.177> on the upper arm, at the longest distance when the upper arm is moved down. The cable that comes out from the tube shaft forms a loop down against the parallel bar. The loop should be big enough so that it runs quite close to the inside of the cover.

4 Axis 3

4.1 Replacing motor

Refer to foldout 4:1, 4:2.

Dismounting:

Be careful not to tap or hit the shaft axially, nor displace the shaft axially in any way, as this could give rise to an incorrect air gap in the brake.

1. **Lower the balancing weight to its lowest position and secure axis 3 with a hoist, or mount two extra mechanical stops on each side of the moving stop on axis 3, to lock the movement of axis 3.**

Danger! Be careful! Make sure that the balancing weight or the upper arm are locked in their positions and that they cannot move when the motor with brake is dismounted.

2. Disconnect connectors R3.MP3 and R3.FB3.

3. Attach a hoist to the motor, which is rather heavy.

4. Unscrew the screws <1.31> for the motor.

5. Pull out the motor.

6. Loosen screw <1.30> and mount a screw 150 mm long and pull off the gear with a puller.

Mounting:

7. Mount a fully threaded pin in the motor shaft and press the gear on to the shaft with a nut and washer. Mount screw <1.30> through the gear, torque 45 Nm, Loctite 242.

This is to avoid axial force through the bearings in the motor.

8. Ensure that the assembly surfaces are clean and unscratched.

9. Mount O-ring <1.28>, applying some grease.

10. Mount motor, lubricate screws <1.31> with Molycote 1000 and tighten with torque 50 Nm.

Do not forget to remove the two extra mechanical stops, if they are used.

11. Calibrate the robot as described in Chapter 9, Calibration.

Tightening torque:

Screws for motor, item 1.31:	50 Nm
Screw for gear, item 1.30:	45 Nm

4.2 Replacing gearbox

Refer to foldout 4:1, 4:2.

Dismounting:

1. Dismount motor as described in Chapter 4.1, Replacing motor.
2. Unscrew screws <1.38.2> and dismount the motor socket <1.38.1>.
3. Mount 2 guide pins, M12 through the gearbox.
4. Loosen screws <1.5> and <1.7>.
5. Pull out the gear box <1.3>, hanging on the guide pins.

Mounting:

6. Clean the surfaces in the frame, lower arm and gearbox.
7. Mount 2 guide pins, M12.
8. Mount friction rings <1.16, 1.37> and O-ring <1.4>.
9. Put the gear box on the 2 guide pins and place the friction ring <1 16> on to the gearbox.
10. Mount screws <1.5> and <1.7>, lubricate with Molycote 1000 and tighten screw <1.7> with 300 Nm and screw <1.5> with 120 Nm.
11. Mount O-ring <1.14>.
12. Put the motor socket on the 2 guide pins.

Note! The position of the magnetic plugs.

13. Mount screws <1.38.2>, lubricate with Molycote 1000 and tighten with a torque of 120 Nm.
14. Mount the motor as described in Chapter 4.1, Replacing motor.

Tightening torque:

Screw joint gearbox/parallel arm, item1. 7:	300 Nm
Screw joint gearbox/parallel arm, item 1.5:	120 Nm
Screw joint motor socket/frame, item 1.38.2:	120 Nm

4.3 Dismounting parallel arm

Refer to foldout no. 5:1.

Dismounting:

1. Remove the lower arm as in Chapter 3.3, Replacing lower arm.
2. Place the arm on a workbench.
3. Attach a hoist to the parallel arm.
4. Force the parallel arm to the right, seen from the rear.
5. Lift the parallel arm away.

Mounting:

6. Place the parallel arm in position.
7. Press the parallel arm into the lower arm.

14. Mount the lower arm as in Chapter 3.3, Replacing lower arm.

4.4 Dismounting parallel arm
(Only valid for robots with serial number IRB 6400 0001-0048)

Refer to foldout no. 5:2.

Dismounting:

1. Remove the lower arm as in Chapter 3.3.
2. Place the arm on a workbench.

Observe and mark the position of the parallel arm in relation to the intermediate ring <1.2>.

3. Attach a hoist to the parallel arm.
4. Unscrew screw <1.12>.
5. Press out the support bearings <1.7> and shaft <1.6>.
   Use tools NIKE CLF 50-10 + 10 mm distance. Mount a M16x60 screw in the shaft <1.6>. Press against the head of the screw.
6. Unscrew screws <1.14> and <1.12>.
7. Lift the parallel arm away.

Mounting:

8. Mount the O-ring <1.10> and friction ring <1.34> in the parallel arm, using some grease, and seal ring <1.5> to the intermediate ring <1.2>.

9. Make sure that the distance ring <1.9> and the seal <1.8> are on the shaft <1.6>.

10. Place the parallel arm in position.

11. Lubricate screws <1.14> with Molycote 1000 and tighten with a torque of 120 Nm.

NOTE! Two washers <1.15> under screw <1.14>!

12. Tighten screw <1.12 > with a torque of 180 Nm, lubricate with Molycote 1000.

13. Check that the sealing ring <1.13> is in the right position and turned correctly.

14. Mount the lower arm as described in Chapter 3.3.

Tightening torque:

Screw joint intermediate ring/parallel arm, item 1.14:	120 Nm
Screw shaft/parallel arm, item 1.12:	180 Nm

4.5 Replacing parallel bar with bearings

Refer to foldout no. 5:1, 8.

Dismounting:

IMPORTANT! Secure axis 3 with two extra mechanical stops, so that the balancing weight for axis 3 cannot fall down, and secure the upper arm with a hoist or similar.

1. Attach a hoist to the parallel bar.

NOTE! Mark the clamps so that they can be refitted in the same place.

2. Dismount clamps <5:1/1.2.2> (<5:2/1.11.2>) by the parallel arm.

3. Dismount clamps <8/31.3.2> by the upper arm. Lift the bar away.

Mounting:

4. Lift the parallel bar in position.

5. Lubricate screws <5:1/3.160> (<5:2/1.11.3>) and <8/31.3.3> with Molycote 1000 and tighten with a torque of 300 Nm.

6. Make sure that the clamps are tightened symmetrically.

Do not forget to remove the 2 extra mechanical stops!

Tightening torque:

Screws, clamps, item 5:1/3.160 (5:2/1.11.3) and 8/31.3.3: 300 Nm.

4.6 Dismounting upper arm, complete

Refer to foldout no. 5:1, 8.

Dismounting:

IMPORTANT! Secure axis 3 with two extra mechanical stops, so that the balancing weight for axis 3 cannot fall down.

1. Dismount balancing springs as in Chapter 3.6, Dismounting balancing springs or Chapter 3.7, Dismounting balancing springs (S /2.9-120).
2. Remove the cables and air hose inside the lower arm as in Chapter 3.8, Dismounting cables, lower arm/upper arm.
3. Attach a hoist to the upper arm. See Figure 2.

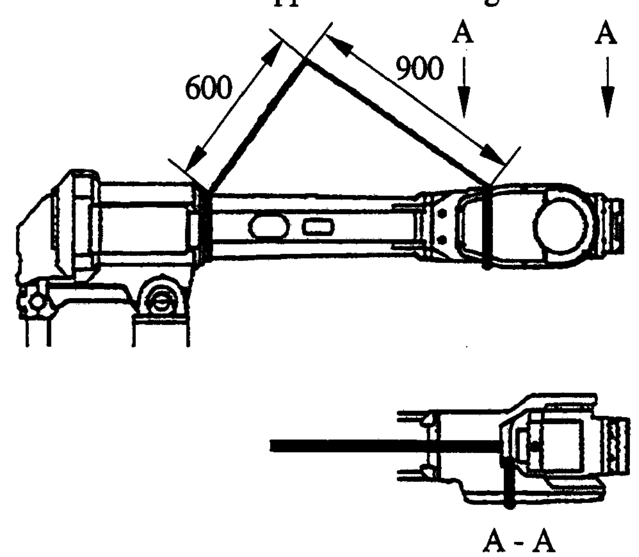

Figure 2 Lifting the upper arm.

4. Unscrew the clamps <8/31.3.2> on the upper arm for the parallel bar. Let the bar rest on the weights. NOTE! Mark the clamps.
5. Remove the KM nut (1) on each shaft. See Figure 3.

Note! For S 2.9-120, a special extended KM socket is necessary.

6. Remove the stop screws (2) in the lower arm. See Figure 3.
7. Unscrew the shafts (3). The bearing is pressed out with the shaft. See Figure 3.

Note! Be careful with the threads on the shafts.

8. Lift the upper arm away.

Mounting:

9. Place the upper arm in position.

NOTE! Mount the left side first, complete, robot seen from behind! See Figure 3.

10. Mount sealing ring (4), turn the largest diameter inwards.
11. Mount the outer ring of the bearing in the upper arm.
12. Mount the V-ring (5) on the shaft.
13. Mount the shaft (3). Lubricate the threads with Molycote 1000 and tighten with a torque of 300 Nm.
14. Apply Loctite 242 on stop screw (2) and tighten.
15. Insert the distance ring (6) on the shaft (only on the left side).
16. Mount the bearing (7).
17. Insert the NILOS-ring (8) and distance ring (9).
18. Mount the KM nut. Apply Loctite 242 and tighten the nut, then loosen the nut again and tighten with a torque of 90 Nm.
19. Then mount the right side, paragraphs 12-18 (similar to the left side, except for the distance ring (6)). Just tighten the nut to 90 Nm.
20. Mount the parallel bar. Use Molycote 1000 and tighten screws <8/31.3.3> for the clamp with a torque of 300 Nm.
21. Mount the cabling as in Chapter 3.8, Dismounting cables, lower arm/upper arm.
22. Mount the balancing springs as in Chapter 3.6, Dismounting balancing springs or Chapter 3.7, Dismounting balancing springs (S /2.9-120).

NOTE! Remove the 2 extra mechanical stops!

Tightening torque:

Shafts, item (3):	300 Nm
KM nut, item (1):	90 Nm
Screws, clamps, item 8/31.3.3:	300 Nm

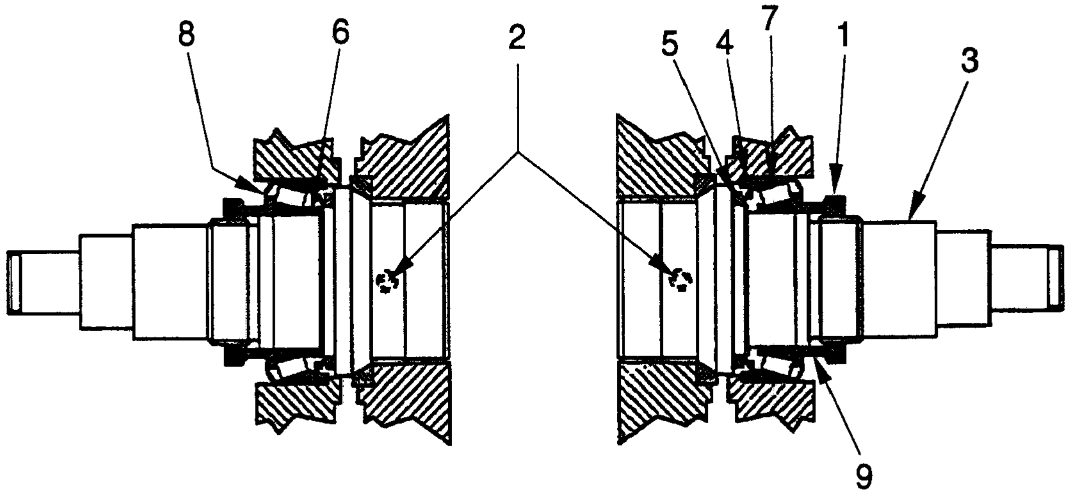

Figure 3 Joint axes 2 and 3.

4.7 Dismounting arm extender

Refer to foldout nos. 0:3, 0:4, 0:5 and 8.

Dismounting:

1. Dismount wrist according to Chapter 7, Wrist, axes 5 and 6.
2. Connect a hoist to the extender <8/7>.
3. Unscrew screws <8/33> for the extender and remove it.

Mounting:

4. Lift the extender in position.
5. Lubricate the screws <8/33> with Molycote 1000 and tighten with a torque of 120 Nm.
6. Mount the wrist according to Chapter 7, Wrist, axes 5 and 6.

Tightening torque:

Screw joint extender/tube shaft, item 8/33: 120 Nm

5 Pushbutton unit for release of brakes

5.1 Replacing pushbutton unit

Refer to foldout no. 4:1(4:2 for S 2.9-120)

Dismounting:

1. Remove the pushbutton unit <2.3> located in the frame.
2. Disconnect connectors R3.BU1-6(X8), R3.BU1-3(X9), R3.BU4-6(X10).

Mounting:

3. In reverse order.

6 Axis 4

6.1 Replacing motor

The robots are supplied with two different makes of motor for axes 4, 5 and 6, either ELMO or Siemens. Check the manufacturer's label on the motor for axis 4 or 6. When in need of spare parts, see the Spare Parts List. It is not permissible to exchange the motor types on axis 4 and the wrist (axes 5 and 6).

Refer to foldout no. 8

Dismounting:

1. Drain the gearbox by removing oil plug <31.26>.
2. Disconnect connectors R3.MP4 and R3.FB4.
3. Secure axis 4 so it cannot rotate when the motor is removed.
4. Remove cover <31.28>.
5. Remove the screws <31.14> and nuts <31.18>.
6. Unscrew screws <31.25> and pull out the motor.

Be careful not to tap or hit the shaft axially, nor displace the shaft axially in any way, as this could give rise to an incorrect air gap in the brake.

7. To press the gear off the motor shaft, oil must be injected into the centre of the gear. Mount SKF Oil injector 226270 + SKF nipple 725 870 + 234 063 in the centre and press the gear off the shaft.

Mounting:

8. Press the gear on to the motor shaft. Use tool 6896 134-EA + 6896 134-AC.

Remove the small cover at the rear of the motor and place support 6896 134-EA under the motor shaft, to avoid axial loading of the bearings in the motor.

9. Mount O-ring <31.2> and insert motor, tighten screws <31.25>, torque 22 Nm.
10. Adjust the intermediate wheel as described in Chapter 6.2, Replacing and adjusting intermediate gear.
11. Mount a new cork seal <31.29> on the cover.
12. Fill the gearbox with oil, type ABB 1171 2016 -604, volume 6 litres. Regarding replacement oils see the Maintenance Manual IRB 6400.
13. Calibrate the robot as described in Chapter 9, Calibration.

Tightening torque:

Screws for motor, item 31.25:	22 Nm

6.2 Replacing and adjusting intermediate gear

Refer to foldout no. 8.

Dismounting:

1. Drain the gearbox of oil.
2. Secure axis 4 mechanically.
3. Remove the cover <31.28>.
4. Unscrew the screws <31.14>.
5. Unscrew nuts <31.18> and remove the wedges <31.17> and remove screws <31.14>.
6. Remove the pin screw <31.16> located to the right, above the motor.
7. Pull out the intermediate gear unit.

Mounting:

8. Mount the gear and tighten screws <31.14> only very slightly.
9. Mount back the pin screw <31.16>.
10. Adjust the play by moving the intermediate wheel to obtain a smallest play between the final gear and the motor gear, at four points, by turning axis 4. Make sure that axis 4 turns without that the gears "chews".
11. Tighten screws <31.14> with a torque of 69 Nm.
12. Insert the 3 wedges <31.17> with 2 tension washers <31.43> and nut <31.18> on <31.16>, tighten with a torque of 12 Nm.

Note! Fit the tension washers with their concave sides against each other.

NOTE! Check the play.

13. Mount cover <31.28> with a new seal <31.29>.
14. Fill the gearbox with oil, ABB 1171 2016-604, volume 6 litres. Regarding replacements oils, see the Maintenance Manual IRB 6400.
15. Calibrate the robot as described in Chapter 9, Calibration.

Tightening torque:

Screw joint intermediate wheel, item 31.14:	69 Nm
Nuts/wedge joints, item 31.18:	12 Nm
Fixing screws for motor, item 31.25:	22 Nm

6.3 Replacing final gear

Refer to foldout no. 8.

Dismounting:

1. Dismount cabling in the upper arm as in Chapter 3.8, Dismounting cables, lower arm/upper arm.
2. Dismount adjustable intermediate gear as in Chapter 6.2, Replacing and adjusting intermediate gear.
3. Mount the special hydraulic tool, ABB 6896 134-AN, to the tubular shaft end <5>.
4. Remove the cover in the gear <31.11> and mount nipple, SKF 234 063, with NIKE quick coupling, I-AQU 8.
5. Mount tool, ABB 6396 134-AT with hydraulic cylinder NIKE I-CH 612, on the gear <31.11> with three hexagon screws M12x70 10.9.
6. Connect pump NIKE I-PP6 or hand pump I-HP 416 via a two way valve, NIKE I-VAD 2, to the cylinder and nipple in the gear.
   Use hoses type NIKE, one LS 150 and two LS 51.
7. Pump up the pressure, with both taps on the valve open. When the gear moves sufficiently so that the pressure disappears between the gear and the shaft, close one of the taps. Continue pumping in this way until the gear has been removed.

Be careful with the surface at the end of the shaft.
Otherwise there may be oil leakage.

Mounting:

8. Heat up the gear <31.11> to 160 °C using an induction heater or oven.
9. Mount tool ABB 6896 134-BU on the end of the tube shaft.

The following steps must be carried out in sequence while the gear is still hot.

10. Mount gear on the tube shaft <5>.
11. Mount tool, ABB 6896 134-FK.
12. Mount hydraulic cylinder NIKE I-CH 612 with regulator valve I-VRF31.

13. Press the gear on the shaft with a force of 16 000 N, equivalent to 8.7-9.2 MPA, check the pressure gauge NIKE AMT 150.

14. Check that the distance ring <31.12> is pressed in position behind the gear.

15. The pressure must be retained until the gear has cooled down and shrunk on to the shaft.

16. Mount intermediate wheel as in Chapter 6.2, Replacing and adjusting intermediate gear.

17. Mount the cabling in the upper arm as in Chapter 3.8, Dismounting cables, lower arm/upper arm..

18. Calibrate the robot as described in Chapter 9, Calibration.

6.4 Dismounting tube shaft, upper arm

Refer to foldout no. 8.

Dismounting:

1. Dismount wrist as in Chapter 7, Wrist, axes 5 and 6.

2. Dismount cabling in upper arm as in Chapter 3.8, Dismounting cables, lower arm/upper arm.

3. Dismount the motor axis 4 as in Chapter 6.1, Replacing motor.

4. Dismount the adjustable intermediate gear as in Chapter 6.2, Replacing and adjusting intermediate gear.

5. Dismount final gear as in Chapter 6.3, Replacing final gear.

6. Remove the mechanical stop <31.23> for axis 4.

7. Rotate axis 4 so that the damper <31.22> is visible and can be removed.

8. Remove the stop on shaft <31.20>.

9. Press the tube shaft out with tool 6896 0011-YJ + NIKE 1-CH-612.

10. Knock the bearing <31.6> out.

Mounting:

11. Cover the sliding surfaces, for the seal rings, with some tape.

12. Apply some grease on the diameters of the tubular shaft where the seals must pass.

13. "Fix" the NILOS-ring <31.7> in the upper arm housing with some grease.
14. Mount NILOS-ring <31.8> on tube shaft.
15. Mount bearing <31.6>. Use tool 6896 134-S + 6896 134-S + NIKE 1-CH-612. Alternatively, heat up the bearing to 120°C and mount on the shaft. Let the bearing cool down before further assembly.
16. Grease the bearing.
17. Press the shaft into the housing using the tool 6896 134-FL with holder on -BU + NIKE 1-CH-612.
18. Mount the distance ring <31.12> on the tube.
19. Mount the final gear according to Chapter 6.3, Replacing final gear.
20. Mount the motor and intermediate wheel as in Chapter 6.1, Replacing motor and Chapter 6.2, Replacing and adjusting intermediate gear.
21. Mount the stop <31.20> on the tube shaft. Lock the screws <31.21> with Loctite 242 and tighten with a torque of 84 Nm.
22. Mount the damper <31.22> and the mechanical stop <31.23> with seal and tighten screws <31.25> with a torque of 22 Nm. Use Loctite 242. Apply some grease on the sliding surfaces.
23. Mount the cabling as in Chapter 3.8, Dismounting cables, lower arm/upper arm.
24. Calibrate the robot as described in Chapter 9, Calibration.

Tightening torque:

Screws for stop, item 31.21:	84 Nm
Screws mechanical stop, item 31.25:	22 Nm

6.5 Replacing seals and bearings, upper arm

Refer to foldout no. 8.

Dismounting:

1. Dismount the tube shaft as in Chapter 6.4, Dismounting tube shaft, upper arm.
2. Knock bearing <31.6> off the tube shaft <5>.
3. Knock bearing <31.6> out, inside housing <31.3>.
4. Knock out the sealing <31.10>.

Mounting:

5. Mount a new sealing ring <31.10>, apply some grease on the diameter inside the upper arm house. Use tool 6896 134-FA.

6. Put a NILOS ring <31.8> on to the tube shaft.

7. Mount bearing <31.6> according to Chapter 6.4, Dismounting tube shaft, upper arm, point 15.

NOTE! Let the bearing cool down before mounting the shaft.

8. Apply grease in the bearing.

9. Mount the tube shaft as described in Chapter 6.4, Dismounting tube shaft, upper arm.

7 Wrist, axes 5 and 6

The wrist includes axes 5 and 6 and forms a complete exchangeable unit, comprising motor units and gears.
Two different types of wrist can be supplied, standard and Foundry. See Spare Parts List.

Some maintenance and repair work can be carried out by your own service personnel:

- Oil change as per the Maintenance Manual IRB 6400.
- Change of motor and gear, axis 6.
- Change of motor, axis 5.
- Checking play, axes 5 and 6.
- Adjusting play in axis 5.

When a complete service of the wrist is required, including mounting/adjusting of gear axis 5, the wrist should be sent to ABB Flexible Automation for service.

The robots are supplied with two different makes of motor for axes 4, 5 and 6, either ELMO or Siemens. Check the manufacturer's label on the motor for axis 4 or 6.
If the complete wrist is replaced, or if just a motor is replaced, the same type of motor must be refitted. It is not permissible to mix the motor types on axis 4 and the wrist (axes 5 and 6). When in need of spare parts, see the Spare Parts List.
If the motor types on axes 4, 5 and 6 are changed, the robot control program must be reloaded and the appropriate motor type selected, using the programming unit.

7.1 Dismounting the wrist

Refer to foldout no. 8.

Dismounting:

1. Remove the cables to axes 5 and 6 as in Chapter 7.2, Dismounting cabling, axis 5 and Chapter 7.3, Dismounting cabling, axis 6.

2. Attach a hoist to the wrist, so that it cannot rotate. See Figure 4.

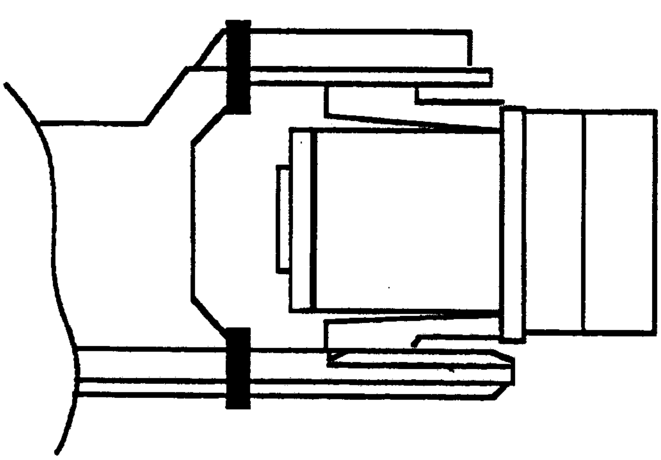

Figure 4 To prevent the wrist from rotating.

3. Unscrew screws < 33>.

4. Pull out the wrist from the upper arm.

Mounting:

5. Lubricate screws <33> with Molycote 1000 and tighten with a torque of 120 Nm.

6. Mount cabling to axes 5 and 6.

7. Calibrate the robot as described in Chapter 9, Calibration.

Tightening torque:

Screw joint wrist/tube shaft, item 33: 120 Nm

7.2 Dismounting cabling, axis 5

Refer to foldout no. 7:1, 7:2

Dismounting:

1. Remove the cover for the cables to axis 6 on the upper arm tube.

2. Loosen the connector box on the left side, with screws <43>, unscrew angle bracket <37> from the box and the upper arm tube.

3. Dismount connectors R3.MP6, R3.FB6 on the box with screws <41>.

4. Turn the box around and dismount connectors R3.MP5, R3.FB5 with screws <41>.

5. Dismount the wrist according to Chapter 7.1, Dismounting the wrist.

6. Loosen connectors R4.MP5, R3.FB5 on the motor.

Mounting:

7. In reverse order.

7.3 Dismounting cabling, axis 6

Refer to foldout no. 7:1, 7:2.

Dismounting:

1. Remove the covers for cables to axis 6 on the upper arm tube and wrist.

2. Dismount connectors R3.MP6, R3.FB6 on the box with screws <41>. Loosen the cable bracket and the sealing with screws <32>.

3. Dismount the cover over the cable pit on the motor.

4. Dismount connectors R4.MP6, R4.FB6 under the cover at the rear of motor 6. Loosen the cover by using the thread of the centre hole and a suitable tool.

   Alternative:
   Press the cover out from the inside with a screw driver through the cable pit.
   Note! Be careful not to damage the cables or resolver.

5. Loosen the carrier mounted on the motor with screws <41>.

Mounting:

6. Mount in reverse order.

Note!

After mounting the cable bracket with screws <32>, the sealing must be tightened. Press out the sealing by tightening the screws to obtain a sealed fit against the hole and cover. Check that the cover is snug up against the wrist housing and cable seal.

7.4 Replacing motor axis 5

Refer to foldout no. 10:1, 10:2.

Dismounting:

1. Dismount the wrist as described in Chapter 7.1, Dismounting the wrist.

2. Drain the oil by opening both magnetic plugs.

3. Dismount screw <33>. Press out the motor <1> with pin screws (M8x65). Keep track of the shims <7> between the motor flange and wrist housing.

4. Measure the distance between the motor flange and the outer surface of the gear. Use tool 6896 134-GN. Make a written note of the distance.

Be careful not to tap or hit the shaft axially, nor displace the shaft axially in any way, as this could give rise to an incorrect air gap in the brake.

5. Press out the gear from the shaft. Use nipple 6896 134-AA + TREDO washer as a seal + SKF-nipple 725870 + SKF oil injector 226270.

   N.B.
   This gear is matched with the other parts of the bevel gear <6/3> for axis 5. If the motor is changed, the gear must be moved over to the new motor axis. If the gear is damaged, the complete bevel gear unit must be replaced.
   Please contact ABB Robotics Service when replacing the bevel gear unit.

6. Press the gear on to the new motor. Use tool 6896 134-EA + 6896 134-AD.

Note!
Remove the small cover at the rear of the motor and place support 6896 134-EA under the motor shaft, to avoid axial loading of the bearings in the motor.

7. Check the distance to the gear with tool 6896 134-GN. If the distance differs from the earlier measurement, an adjustment must be made by adding or removing shims <7>.

8. Release the brake. Mount the motor. Use a new O-ring <24>. Apply Loctite 242 on screws <33> and tighten with a torque of 24 Nm.

9. Fill the gearbox with oil according to the Maintenance Manual IRB 6400.

Tightening torque:

Screw joint motor/wrist housing, item 33: 24 Nm

7.5 Replacing motor/gear axis 6.

Refer to foldout nos. 10:1, 10:2 and 11.

It is not necessary to remove the wrist from the upper arm.

Dismounting:

1. Dismount cabling for axis 6 acc. to Chapter 7.3, Dismounting cabling, axis 6.

2. Drain the oil. Open both magnetic plugs.
   Note! It is not necessary to drain the wrist, if the position of the wrist permits.

3. Unscrew screws <10:1/33>. Dismount shaft <10:1/12> with help of pinscrews M8x65).

4. Dismount cover <10:1/27>. Dismount cover <10:1/16> by deformation (a new cover must be mounted). Loosen screws <10:1/15>.

5. Free the drive unit on the shaft <10:1/5> and lift out.

6. Loosen screws <11/4>. Dismount the gear with the help of 2 screws (M8 holes in the motor flange).

7. Loosen screws <11/5>. Dismount the pinion with tool 3HAA 7601-043.
   (Tool 3HAA 7601-047 for gear 3HAA 0001-FT).

Mounting:

8. Mount the pinion on a new motor. Use a pin screw, M5x120 with nut, to press the gear in place. Tighten screw <11/5>, apply Loctite 242.

NOTE!
Be careful not to tap or hit the shaft axially, nor displace the shaft axially in any way, as this could give rise to an incorrect air gap in the brake.

9. Mount the gear on the motor <11/4>. Use a new O-ring <11/2>. Turn the gear so that the screw hole and magnetic oil plug come in the right position. Torque 35 Nm.
10. Move the sync plates and connector holder on the resolver side, over to the new motor. When replacing the gear: the sync plate <11/11> on the gear is glued. Clean the surface careful before mounting (a new sync plate must be mounted).
11. Mount the drive unit in the wrist <10:1/15, 13>. Fix against the guide in item <10:1/5>. Tightening torque 69 Nm. Mount distance ring <10:1/13>, bearing <10:1/11> and shaft <10:1/13>. Tightening torque 24 Nm. Use Loctite 242 for item <6/33>.
12. Mount cover <6/16> (new cover) and cover <6/27, 31>. Use a new gasket <10:1/28>. Tightening torque 10 Nm.
13. Fill oil in axis 5 according to the Maintenance Manual IRB 6400.
14. Pour grease into axis 6 according to the Maintenance Manual IRB 6400.
15. Calibrate the robot as described in Chapter 9, Calibration.

Tightening torque:

Screw joint motor/gear, item 4:	35 Nm
Screw joint, drive unit/ gear 5, item15:	69 Nm
Screw joint, drive unit/shaft, item 33:	24 Nm
Cover, item 31:	10 Nm

7.6 Checking play in axes 5 and 6.

Refer to foldout no. 10:1, 10:2

Axis 5

1. Drain the oil. Unscrew both the magnetic plugs. Dismount cover <27>.
2. Mount fixing plate 6896 134-CE in 3 screw holes for the cover.
3. Fix a PEK dial indicator with a magnetic foot on the fixing plate. Measure against the front part of the turning disc, at D=160 mm, B= 8 mm. See Figure 5.
4. Use tool 6896 134-CD or mounted equipment to check the total play in axis 5. The brake must be on. Max. play 0.30 mm at a distance of 196 mm from the centre of axis 5. (Max. play for a new wrist is 0 –0.15 mm).

Adjustment: See Chapter 7.7.1, Adjusting gear play

Axis 6

1. Check the play in axis 6 with tool 6896 134-CF.

2. Measure with a PEK dial indicator against the tool. See Figure 5.

3. Max. play 0.06 mm at a distance of 190 mm from the centre of axis 6.

   Comment: The play in the gear unit cannot be adjusted. If necessary, the gear unit must be replaced, see Chapter 7.5, Replacing motor/gear axis 6..

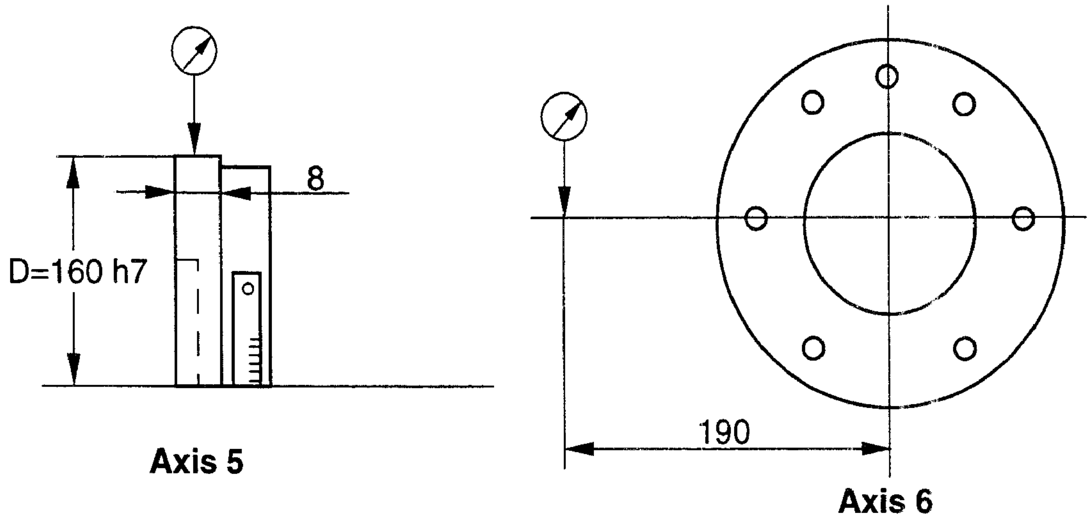

Figure 5 How to measure the play in the wrist.

7.7 Adjusting play in axis 5.

Refer to foldout no. 10:1, 10:2

1. Remove the cover <10:1/27>. Investigate the cause of the excessive play on axis 5. Then take action as described in one of the following alternatives:

   A. The intermediate gear unit <10:1/4> is stuck, the play between gears <6/3> and <6/5> is excessive. The play must be 0 - 0.08 mm, measured at three different meshing points.

   Action: Adjust the play as described in Chapter 7.7.1, Adjusting gear play

   B. The intermediate gear unit <6/4> has become loose. Check that the gears <10:1/3>, <65> and other parts (<10:1/18>, <10:2:1/20>, <10:2:1/21>, <6:2/22> and <10:2/43>) are not damaged.

   Action: Replace damaged parts and adjust the play as described in Chapter 7.7.1, Adjusting gear play

   C. There is play in the bearings of the intermediate gear unit <10:1/4>.

   Action: Adjust the bearing as described in Chapter 7.7.2, Adjusting the intermediate gear unit bearings and adjust to the correct play as described in Chapter 7.7.1, Adjusting gear play.

7.7.1 Adjusting gear play

Refer to foldout no. 10:1, 10:2

1. Remove the wedges <10:2/21>. Check that they are not damaged.

2. Adjust the intermediate gear unit <10:1/4> with the centre screw <10:1/18>. The gear mesh play between the pinion <10:1/3> and the gearwheel <10:1/18> must be 0 - 0.08 mm. Measure the play at three different places. Use the tool 6896 134-CE and a dial indicator on a magnetic foot.

3. Tighten the intermediate gear unit <10:1/4> using the screw <10:1/18>, to a torque of 93 Nm ± 5%.

4. Mount the wedges <10:2/21> and the two tension washers <10:2/43> (fit them as shown on foldout 10:2).

5. Tighten the wedges alternately with the nuts <10:2/22>. Torque 12 Nm ± 5%. Apply Loctite 242 to lock the nuts.
   Check the gear play after tightening as described in Chapter 7.6, Checking play in axes 5 and 6.

   Tightening torque:

Screw for intermediate wheel, item 10:1/18:	93 Nm ± 5%
Nuts for wedges, item 10:2/22:	12 Nm ± 5%

7.7.2 Adjusting the intermediate gear unit bearings

Refer to Figure 6.

The roller bearings (1) must be pretensioned to eliminate any backlash.

1. Remove the stop screw (2) and the locknut (3).

2. Clean the threads in the hub (4) and the locknut (3).

3. Apply Loctite 290 on the threads in the hub and the locknut.

4. Tighten the locknut (3). Torque 85 Nm ± 5% (for a replacement bearing).
   Use the tool 3HAB 1022-1 together with the torque-wrench.

   Note!
   If the same bearing is fitted again, the torque should be 70-75 Nm.

5. Fit the stop screw (2), extra locking. Apply Loctite 242.

Tightening torque:

Locking nut in the intermediate wheel, item (3): 85 Nm ± 5%

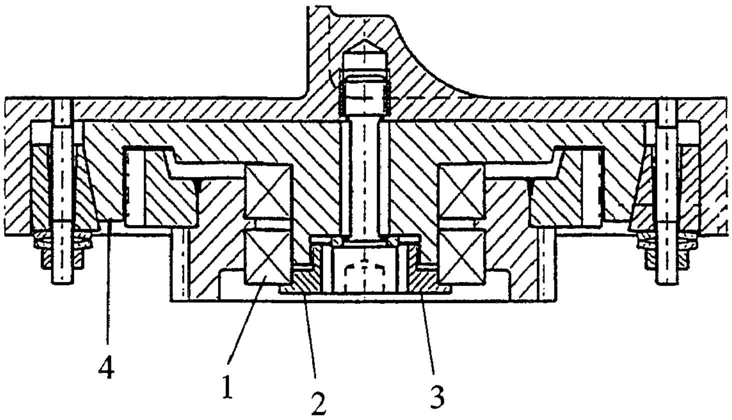

Figure 6 Intermediate wheel unit.

8 Motor units

8.1 General

Each manipulator axis is provided with a motor unit consisting of:

- A synchronous AC motor
- A brake unit
- A feedback unit.

A gear on the output shaft of the motor forms together with the gear on each axis, the complete gear unit. Dismounting/mounting of the gear unit is described in an earlier chapter of this manual.

The electro-magnetic brake is built into the motor unit. The brake is released by a 24 V DC supply. For brake release see Product Manual/Installation IRB 6400.
The feedback unit consists of a resolver mounted on the motor shaft and is built into the motor unit in a similar way as the brake.
Power and signal connections to the motor units are via separate cables between connections points inside the manipulator and each motor. The cables are connected to the motor units with connectors.

Note!
Different makes of motors are used on axes 4, 5 and 6, either ELMO or Siemens. It is not permissible to mix these types of motor. The type of motor is selected when the control program is loaded in the robot. To determine the type of motors on a robot, check the manufacturer's label on the motors on axis 4 or axis 6.

- The feedback unit is fitted by the motor manufacturer and must never be separated from the motor.
- The communication angle is + 90° (COMOFF=2048).
  The motors never need commutating.
- The cable routing inside the motors at the resolver must never be changed because of the risk for interference to the resolver signals.
- The motor, resolver and brake is to be regarded as an replacement motor unit. Faulty motor units are repaired by the motor manufacturer, on order of ABB Robotics service organisation.

8.2 Checking brake performance

Axis	Motor	Static brake torque (Nm) Min.	Gear reduction ratio	
1	3HAB 4039-1	15	185	
	3HAB 4043-1 (PE /2.25-75)	15	185	
2/3	3HAB 4040-1	15	185	
2/3	3HAB 4043-1 (PE /2.25-75)	15	185	
2	3HAB 4039-1 (S /2.9-120)	15	185	
3	3HAB 4040-1 (S /2.9-120)	15	185	
4/5	3HAB 4041-1	15	51.4/53.5	**ELMO**
4/5	3HAB 4584-1	15	51.4/53.5	**SIEMENS**
4/5	3HAB 4044-1 (2.4-150)	23	51.4/53.5	**ELMO**
4/5	3HAA 0001-ZH (2.4-150)	23	51.4/53.5	**SIEMENS**
4/5	3HAB 4041-1 (PE /2.25-75)	15	51.4/53.5	**ELMO**
6	3HAB 4042-1	6	81	**ELMO**
6	3HAA 0001-XK	8	81	**SIEMENS**

A check on the static brake torque for each motor unit can be done by applying a load on the turning disc in some suitable way. When calculating the brake torque, the arm and gear reduction ratio must be taken into consideration. The coefficient of efficiency for the gear is assumed to be 1.0.

9 Calibration

9.1 General

The robot measurement system consists of one feedback unit for each axis and a measurement board that continuously keeps track of the current robot position.
The measurement board memory has a battery backup.

Note! The accumulator unit will be fully recharged when the mains supply has been on for 18 hrs.

The measurement system must be carefully calibrated (as in chapter 9.2) if any of the resolver values are changed. This happens when:

- parts affecting the calibration position have been replaced on the robot.

The system needs to be roughly calibrated (as in chapter 9.3) if the contents of the revolution counter memory are lost. This may happen when:

- the battery is discharged.
- a resolver error occurs.
- the signal between resolver and measurement board is interrupted.
- a robot axis has been moved with the control system disconnected.

9.2 Calibration procedure

The axes must be adjusted in increasing sequence, i.e., 1 - 2 - 3 - 4 - 5 - 6.

1. Position the manipulator approximately in calibration position 0 as shown Figure 9.
2. Select the MOTORS OFF mode.

Axis 1

3. Remove cover plate on the reference surface on gearbox 1.
4. Attach the synchronisation fixture 6896 0011-YM to the flat surface and insert the corresponding measuring rod 6896 0011-YN in one of the three holes in the base. Turn the operating mode selector to MANUAL REDUCED SPEED.
5. Press the enable device on the programming unit and operate the robot manually with the joystick until the measuring rod is positioned within the flat surface on the calibration fixture's elbow.

Be careful! Risk of injury!

6. Align the pin and tool with a sliding calliper. See Figure 7.

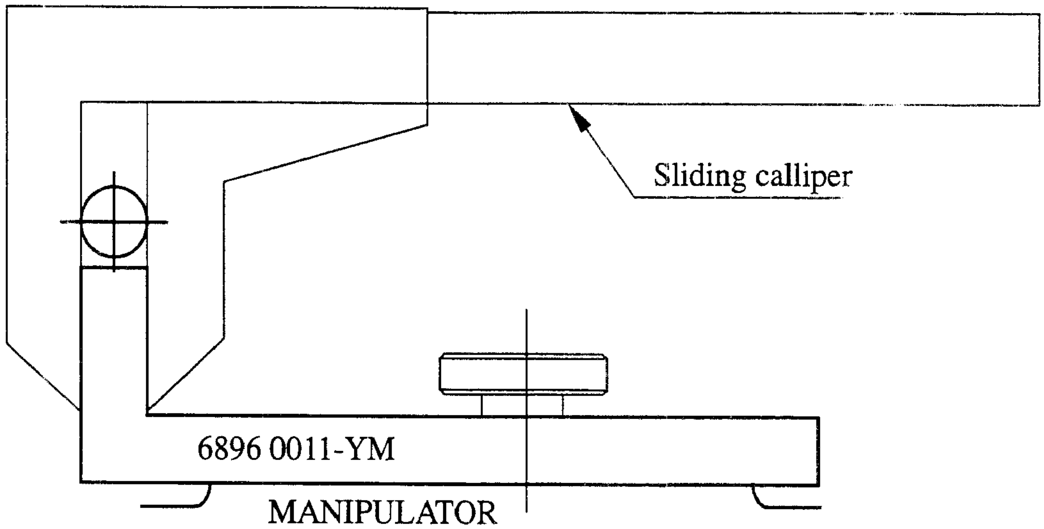

Figure 7 Aligning the pin and tool with a sliding calliper for axis 1.

Calibrate the sensors against each other, using a reference plane surface, in the same direction. The sensors must be calibrated every time they are used for a new direction. See Figure 8.

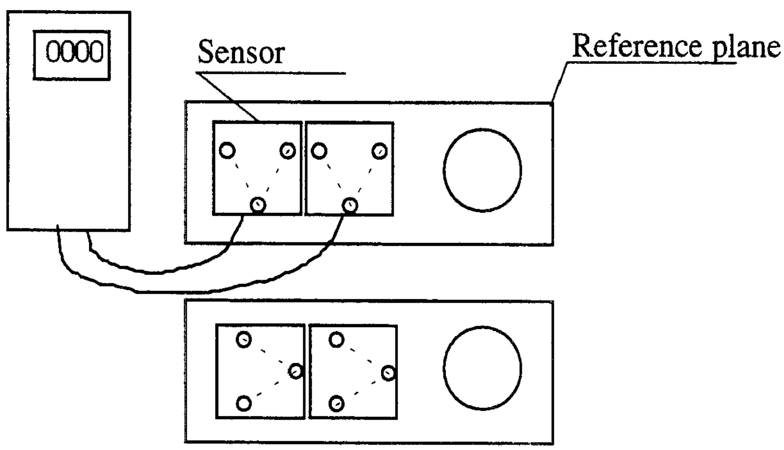

Figure 8 Calibrating the sensors.

Axes 2 - 6

7. Release the enabling device.

8. Mount sensor fixture 6896 0011-GM on the base's reference plane.

9. Mount elbow fixture 6896 0011-LP on the lower arm's calibration plane.

10. Mount sensor fixture 6808 0011-GM on the wrist's calibration plane turned upwards.

11. Mount intermediate plate marked, 6896 134-GZ, on the turn disc. Mount elbow fixture 6808 0011-GU on the intermediate plate. Note that the elbow fixture's position is adjusted with a guide pin.

12. Mount inclination instrument 6807 081-D. One sensor is to be mounted on the reference plane and the other on the elbow fixture for axis 2. Both sensors are to be positioned in the same direction. See also Figure 9.

Note that the sensor unit must always be mounted on top of the fixture.

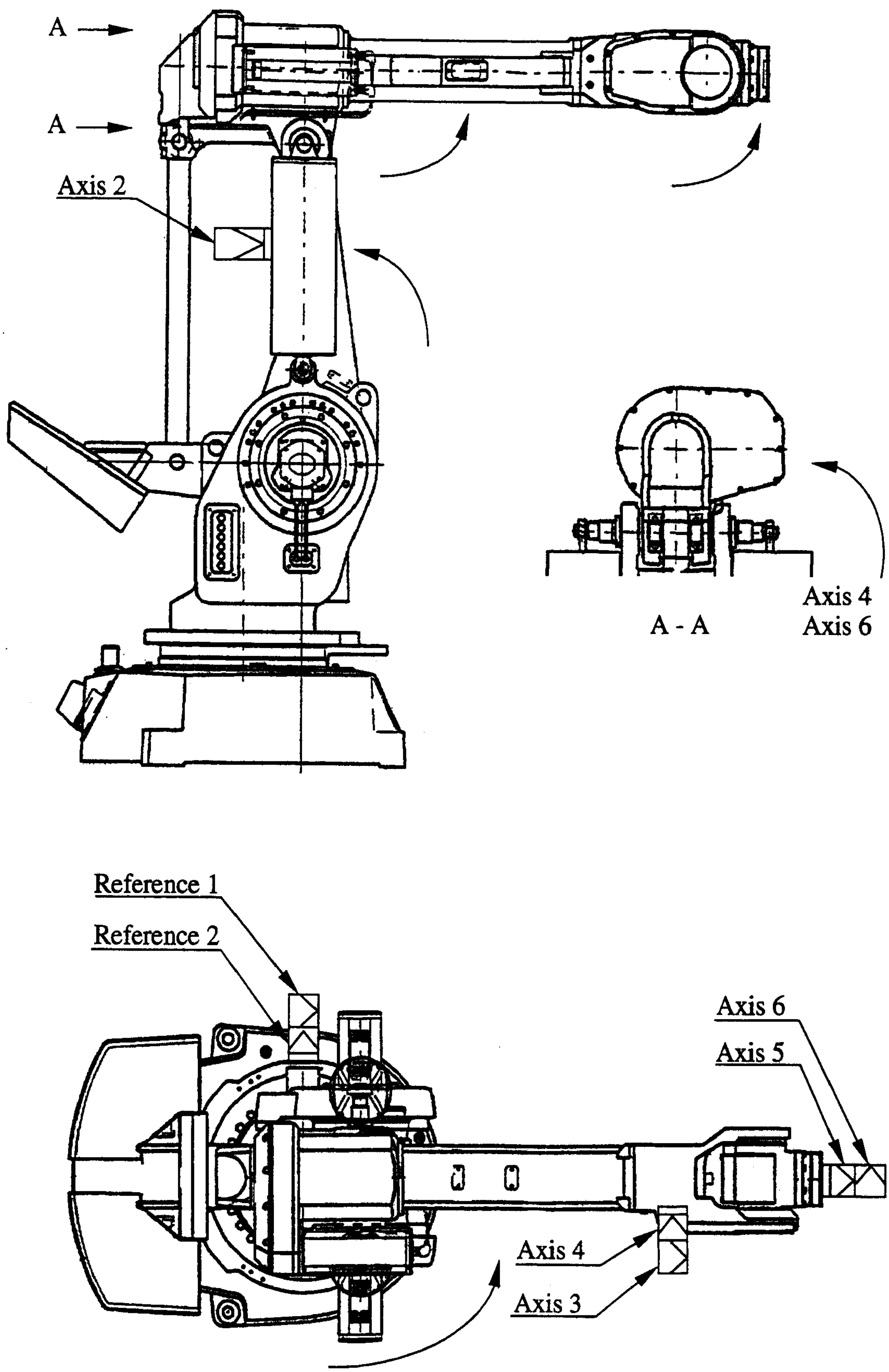

Figure 9 Movement directions for calibration, reference surface.

13. Press the enabling device and operate the joystick manually in the directions shown in the figure on the previous page, until the digital levelling gauge indicates zero. The gauge should read 0 ±12 increments. (0.3 mm/m).

    The reason why the calibration position is always adjusted in the directions shown in the figure, is that the friction and gravity forces then work together against the direction of the movement. In this way adjustment is simplified.

14. Turn the reference sensor, and move the other sensor and continue the calibration procedure for the other axes.

15. When all the axes have been adjusted, the resolver values are stored by executing the following commands on the teach pendant.

16. Press the **Misc.** window key (see Figure 10).

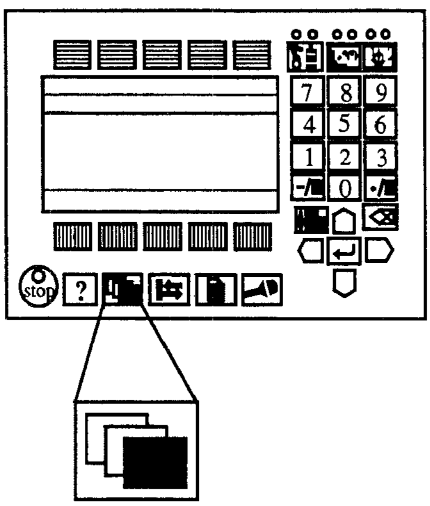

Figure 10 The Misc. window key from which the Service window can be selected

17. Select **Service** in the dialog box shown on the display.

18. Press **Enter** .

19. Select **View: Calibration.** The window in Figure 11 appears.

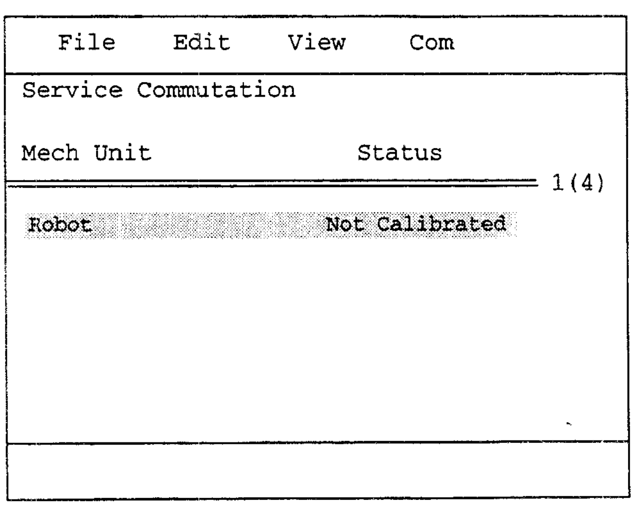

Figure 11 The window shows whether or not the robot system units are calibrated.

The calibration status can be any of the following:

- **Synchronized**
  All axes are calibrated and their positions are known. The unit is ready for use.
- **Not updated Rev. Counter**
  All axes are fine-calibrated but one (or more) of the axes has a counter that is NOT updated. That axis, or those axes, must therefore be updated as described in Chapter 9.3.
- **Not calibrated**
  One (or more) of the axes is NOT fine-calibrated. That, axis or those axes, must therefore be fine-calibrated as described in Chapter 9.2.

20. If there is more than one unit, select the desired unit in the window in Figure 11. Choose **Calib: Calibrate** and the window shown in Figure 12 will appear.

```
Calibration!
Robot
To calibrate, include axes and press OK.

     Axis                    Status
                                         1(6)
X       1              Not Fine Calibrated
X       2              Not Fine Calibrated
        3                  Fine Calibrated
        4                  Fine Calibrated
X       5              Not Fine Calibrated
X       6              Not Fine Calibrated

    Incl      All             Cancel      OK
```

Figure 12 The dialog box used to calibrate the manipulator.

21. Press the function key ***All*** to select all axes, if all axes are to be commutated. Otherwise, select the desired axis and press the function key ***Incl*** (the selected axis is marked with an x).

22. Confirm by pressing ***OK***. The window in Figure 13 appears.

```
Calibration!
Robot

     - - - - - WARNING - - - - -
The calibration for all marked axes
will be changed.

It cannot be undone.
OK to continue?

                              Cancel      OK
```

Figure 13 The dialog box used to start the calibration.

23. Start the calibration by pressing ***OK***.

    An alert box is displayed during calibration.
    The Status window appears when the fine calibration is complete. The revolution counters are always updated at the same time as the calibration is performed.

Calibration plate and calibration marks

24. Adjust the calibration plates for axes 1-6 (see Figure 14).

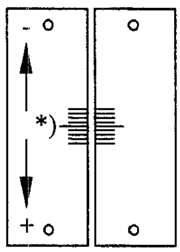

*) axis number

Figure 14 Calibration marking.

25. Check the calibration position as described in Chapter 9.4.

9.3 Setting the calibration marks on the manipulator

When starting up a new robot, you may receive a message telling you that the manipulator is not synchronised. The message appears in the form of an error code on the teach pendant. If you receive such a message, the revolution counter of the manipulator must be updated using the calibration marks on the manipulator. See Figure 14.

Examples of when the revolution counter must be updated:

- when the battery unit is discharged
- when there has been a resolver error
- when the signal between the resolver and the measuring system board has been interrupted
- when one of the manipulator axes has been manually moved without the controller being connected.

It takes 18 hours' operation to recharge the battery unit.

If the resolver values must be calibrated, this should be done as described in the chapter on Repairs in the IRB 6400 Product Manual.

WARNING
Working in the robot work cell is dangerous.

Press the enabling device on the teach pendant and, using the joystick, move the robot manually so that the calibration marks lie within the tolerance zone (see Figure 19). N.B. Axes 5 and 6 must be positioned together.

Note that axis 6 does not have any mechanical stop and can thus be calibrated at the wrong faceplate revolution. Do not operate axes 5 and 6 manually before the robot has been calibrated.

When all axes have been positioned as above, the values of the revolution counter can be stored by entering the following commands on the teach pendant:

1. Press the **Misc.** window key (see Figure 15).

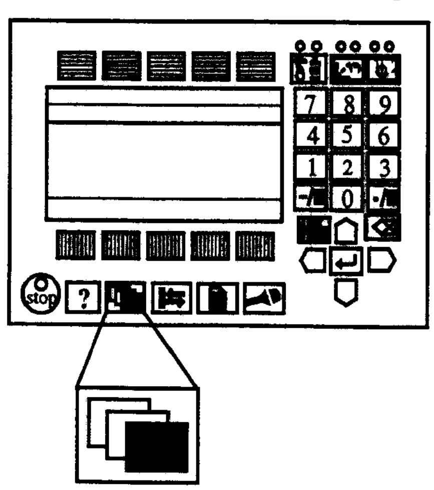

Figure 15 The Misc. window key from which the Service window can be selected

2. Select **Service** in the dialog box shown on the display.

3. Press Enter ↵ .

4. Then, choose **View: Calibration**. The window shown in Figure 16 appears.

```
   File     Edit     View    Calib
Service Calibration

Mech Unit                  Status
================================== 1(4)
Robot                      Unsynchronized
```

Figure 16 This window shows whether or not the robot system units are calibrated.

5. Select the desired unit in the window, as shown in Figure 16.
   Choose **Calib: Rev. Counter Update**. The window in Figure 17 appears.

```
Rev. Counter Updating!
Robot
To update, include axes and press OK.

     Axis                 Status
================================== 1(6)
x      1     Not updated Rev. Counter
x      2     Not updated Rev. Counter
       3     Calibrated
       4     Calibrated
x      5     Not updated Rev. Counter
x      6     Not updated Rev. Counter

   Incl     All            Cancel     OK
```

Figure 17 The dialog box used to select axes whose revolution counter is to be updated.

6. Press the function key ***All*** to select all axes, if all axes are to be updated. Otherwise, select the desired axis and press the function key ***Incl*** (the selected axis is marked with an x).

7. Confirm by pressing ***OK***. A window like the one in Figure 18 appears.

```
Rev. Counter Updating!
Robot

The Rev. Counter for all marked axes
will be changed.

It cannot be undone.
OK to continue?

                              Cancel    OK
```

Figure 18 The dialog box used to start updating the revolution counter.

8. Start the update by pressing ***OK***.

If a revolution counter is incorrectly updated, it will cause incorrect positioning. Thus, check the calibration very carefully after each update. Incorrect updating can damage the robot system or injure someone.

9. Check the calibration as in Chapter 9.4.

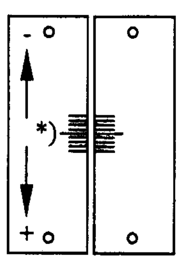

*) axis number

Figure 19 Calibration marks on the manipulator.

9.4 Checking the calibration position

There are two ways to check the calibration position; both are described below.

Using the system disk:

Run the program \ SERVICE \ CALIBRAT \ CAL6400 on system disk IRB 2, (select the desired calibration position, Normal/Left /Right). See Figure 20. When the robot is calibrated, switch to MOTORS OFF. Check that the calibration marks for each axis are on the same level, see Figure 19. If they are not, the calibration must be repeated.

Using the Jogging window on the teach pendant:

Open the Jogging window and choose running axis-by-axis. Using the joystick, move the robot so that the read-out of the positions equals 0. Check that the calibration marks for each axis are on the same level, see Figure 19. If they are not, the calibration must be repeated.

9.5 Alternative calibration positions

The robot must have been calibrated with calibration equipment at calibration position 0 for all axes (the robot is delivered with calibration position 0), see Figure 20, before it can be calibrated in one of the two
alternative positions.

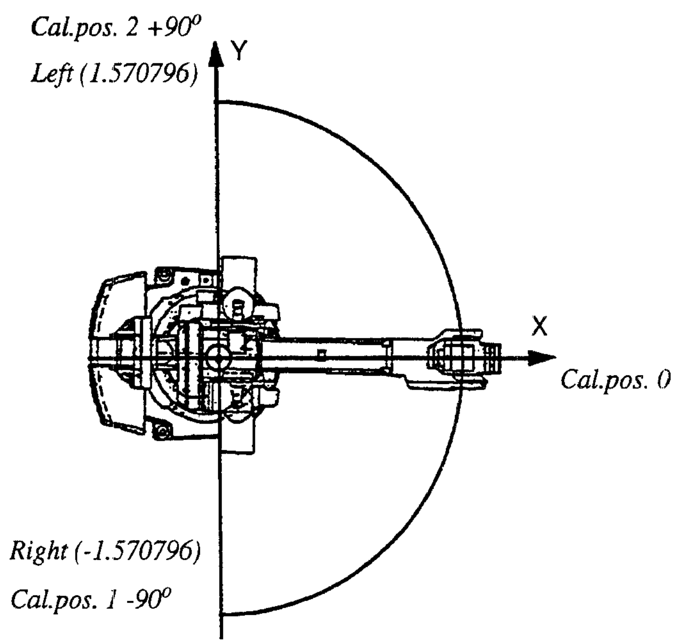

Figure 20 Calibration positions 0, 1 and 2 (Normal, Right and Left)

Note!
If the final installation makes it impossible to reach the calibration 0 position, an alternative calibration position must be set before installation.

1. Run the calibration program CAL6400 on system disk IRB 2 (SERVICE.DIR\ CALIBRATE.DIR). Select Normal position, check the calibration marks for each axes.

2. Run the calibration program again and select the desired calibration position (Left or Right), see Figure 20.

3. Change to the new calibration offset for axis 1, as follows:

   - Select the window SERVICE;
   - **View: Calibration**;
   - **Calib: Calibrate**;
   - Select axis 1 (no other axes)
   - Then confirm by pressing ***OK*** two times.

4. Change to the new calibration offset on the label, located on the frame to the left of motor axis 1 (remove the cover between axes 2 and 3). The new calibration offset values can be found as follows:

   - Select the window SYSTEM PARAMETERS;
   - **Types: Motor**;
   - Select axis 1;
   - Press Enter ↵
   - Note the Cal offset value.

5. Change to the new calibration position on axis 1, as follows:

   - Select the window SYSTEM PARAMETERS;
   - **Topics: Manipulator**;
   - **Types: Arm**;
   - Select axis 1;
   - Change Cal pos to 1.570796 or -1.570796 depending on selected calibration position. The angle is in radians, see Figure 20.

6. Restart the robot by selecting **File: Restart**.

7. Move the sync.plate, on the base, for axis 1 to its new position.

8. Save the system parameters on a floppy disk.

9.6 Calibration equipment

1. Inclination instrument	6807 081-D	
2. Calibration equipment	3HAA 0001-MZ	complete set
	6808 011-GM	Angle bracket
	6896 011-YM	Sync fixture axis 1
	6808 0011-LP	Angle bracket
	6896 134-GZ	Sync adapter
	6896 134-GU	Angle bracket
3. Calibration equipment	3HAA 0001-NA	only parts specific for IRB 6400
	6896 0011-YM	Sync fixture axis 1
	6896 134-GZ	Sync adapter
4. Calibration equipment	3HAA 0001-AUE	only parts specific for IRB 6400S /2.9-120
	3HAA 1001-342	Sync mounting axis 2
	3HAA 1001-343	Sync mounting axes 3, 4
	3HAA 1001-344	Sync mounting axes 5, 6

Calibration tools for TCP check

Tool for TCP adjustment	3HAA 0001-UA	X= -15 mm Z= -150 mm
Calibration set for Opti Master	3HAA 0001-XR	

10 Special Tools List

The need for special tools has been reduced to a minimum. When tools are needed for dismounting/mounting work, a description is given in the Product Manual, Chapter Repairs.
During the ordinary service training courses arranged by ABB Flexible Automation, detailed descriptions of the tools are given together with their use.

Rotating gear	3HAB 1067-6
Dismounting, gear motor axis 4	SKF Oil injector 226 270
Support for motor shaft axis 4	6896 134-EA
Adjustment of intermediate wheel	Dial indicator, with magnetic foot
Pressing tool, final gear	6896 134-AT/-AN
Valve	SKF 234 063
Hydraulic cylinder	NIKE I-CH 612
Hydraulic pump	NIKE I-PP6
Two-way valve	NIKE I-VAD 2
Regulating valve with pressure gauge	I-VRF 31
Holding tool, tube shaft end	6896 134-BU
Holding tool, final gear	6896 134-FK
Pressing tool, tube shaft	6896 0011-YJ
Pressing tool, housing and rear bearing	6896 134-FL
Hydraulic cylinder	NIKE CLF 50-10
Hose	NIKE LS 150
Hose	NIKE LS 51, 2 units
Pressure gauge	NIKE AMT 150
Lifting device for bearing axis 1	6896 134-XD
Lifting device gear/coupling disc	6896 134-FW/ -FX
Hydraulic cylinder	NIKE I CH-606
Pressing tool support bearing, parallel arm	6896 134-FN
Pressing tool bearing, lower arm	6896 134-FJ
Pressing tool, support bearing/seal	6896 134-FR/ -FP
Pull rod	6896 134-FH

Pressing tool, bearing and seal, parallel bar	6896 134-FM
Dismounting rear bearing and housing, axis 4	6896 134-YJ
Pressing tool, seal inside housing	6896 134-FA
Pressing tool, front bearing, tube shaft	6896 134-S
Pressing tool, seal, cover housing	6896 134-BX
Nipple	SKF 725 870
Nipple dismounting gear/motor shaft axis 5	6896 134-AA
Puller gear motor axis 6	3HAA 7601-043 3HAA 7601-047
Pressing tool, gear on motor axis 4 gear on motor axis 5	6896 134-AC 6896 134-AD
Measurement fixture, gear motor shaft axis 5	6896 134-GN
Play measurement tool, wrist	6896 134-CE 6896 134-CD 6896 134-CF
Screw for locking axis 2	M16x150
Distance, support bearing parallel arm	M16x60
Lifting gear axes 2 and 3, chain hoist	6896 0011-YL
Tubular KM socket	4-KM 6
Tubular KM socket, extended for S /2.9-120	3HAA 7601-038
Guide pins, 2	M12x200
Guide pins, 2	M12x300
Tightening tool	3HAB 1022-1
Grease nipples (R 1/8")	2545 2021-26

Calibration tool for TCP check

Tool for TCP adjustment	3HAA 0001-UA X=-15 mm, Z= -150 mm
Calibration set for Vision	3HAA 0001-XR

Tools for grease replacement, axes 1-3

Axis 1

Socket	3HAB 156-1
Nipple	3HAA 7601-090
Hose	D=18/12 mm, L= 1000 mm
Hose clip	D= 15-20 mm
Socket	Square 1/2" / hexagon 10 mm
Extender	1/2" / L = 250 mm
Ratchet wrench	

Axes 2-3, 6

Nipple	3HAA 7601-091
Hose	D= 18/12 mm, L= 1000 mm
Hose clip	D= 15-20 mm
Allen key	6 mm

CONTENTS

Spare Parts

1 Manipulator

Item number refers to item number on the foldouts.

1.1 IRB 6400 /2.4-120, basic version

Itm	Qty	Name	Art. no	Rem
1		Rating label		
2		Type label		
3		Serial no. label		

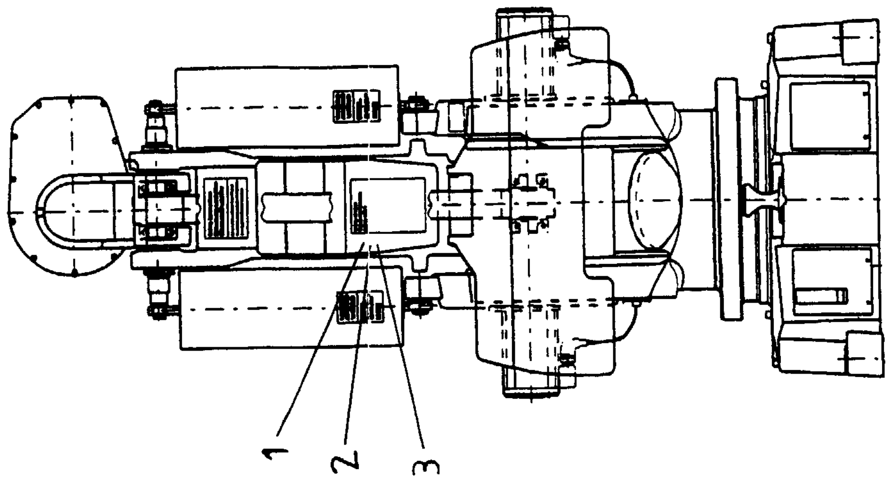

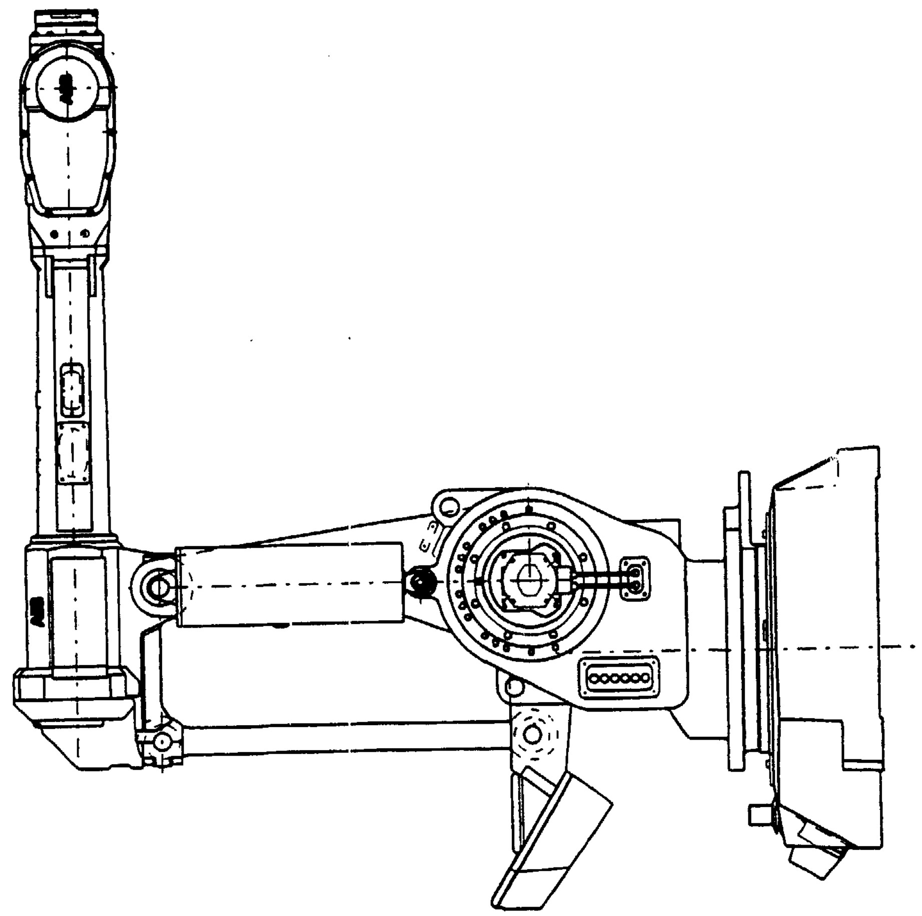

FOLDOUT 0:1

1.2 IRB 6400 /2.4-150

Itm	Qty	Name	Art. no	Rem
1	1	Bal. weight	3HAB 4036-1	400 kg
2	1	Motor axis 4	3HAB 4044-1	**Elmo**
2	1	Motor axis 4	3HAA 0001-ZH	**Siemens**
3	1	Wrist	3HAB 4196-2	**Elmo**
3	1	Wrist	3HAA 0001-ABR	**Siemens**

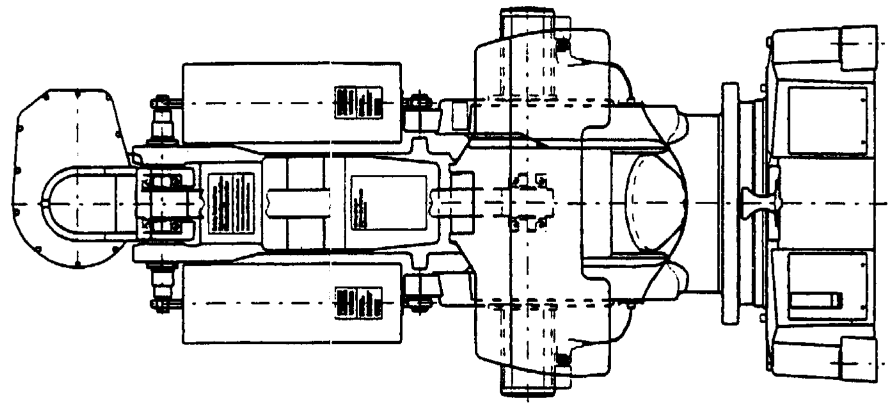

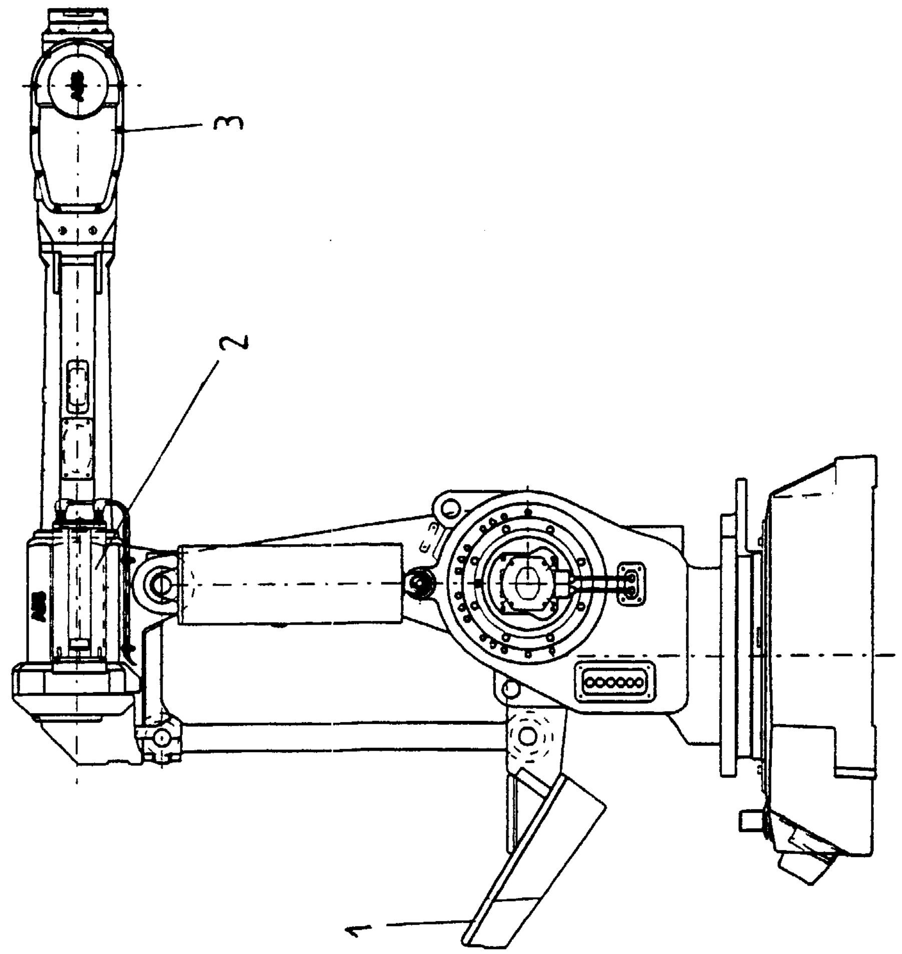

FOLDOUT 0:2

1.3 IRB 6400 /2.8-120

Itm	Qty	Name	Art. no	Rem
1	1	Extender	3HAA 1001-301	404 mm
2	1	Bal. weight	3HAB 4036-1	400 kg
3	1	Cable axis 5	3HAA 0001-YS	
4	1	Cable axis 6	3HAA 0001-YU	
5	1	Cover	3HAA 1001-302	

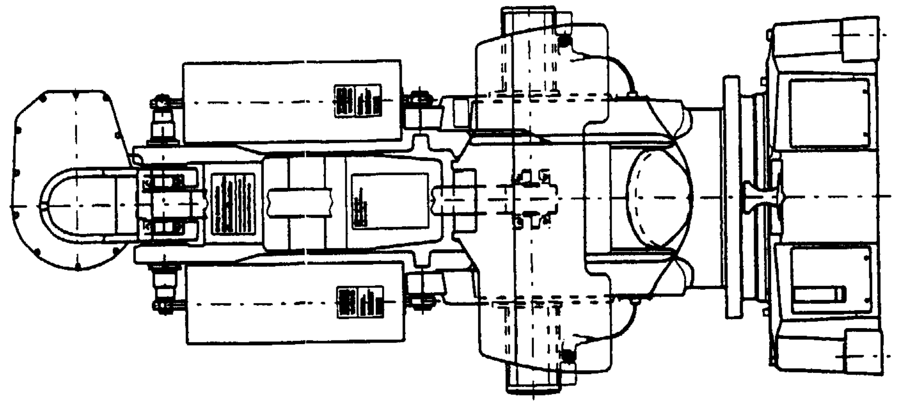

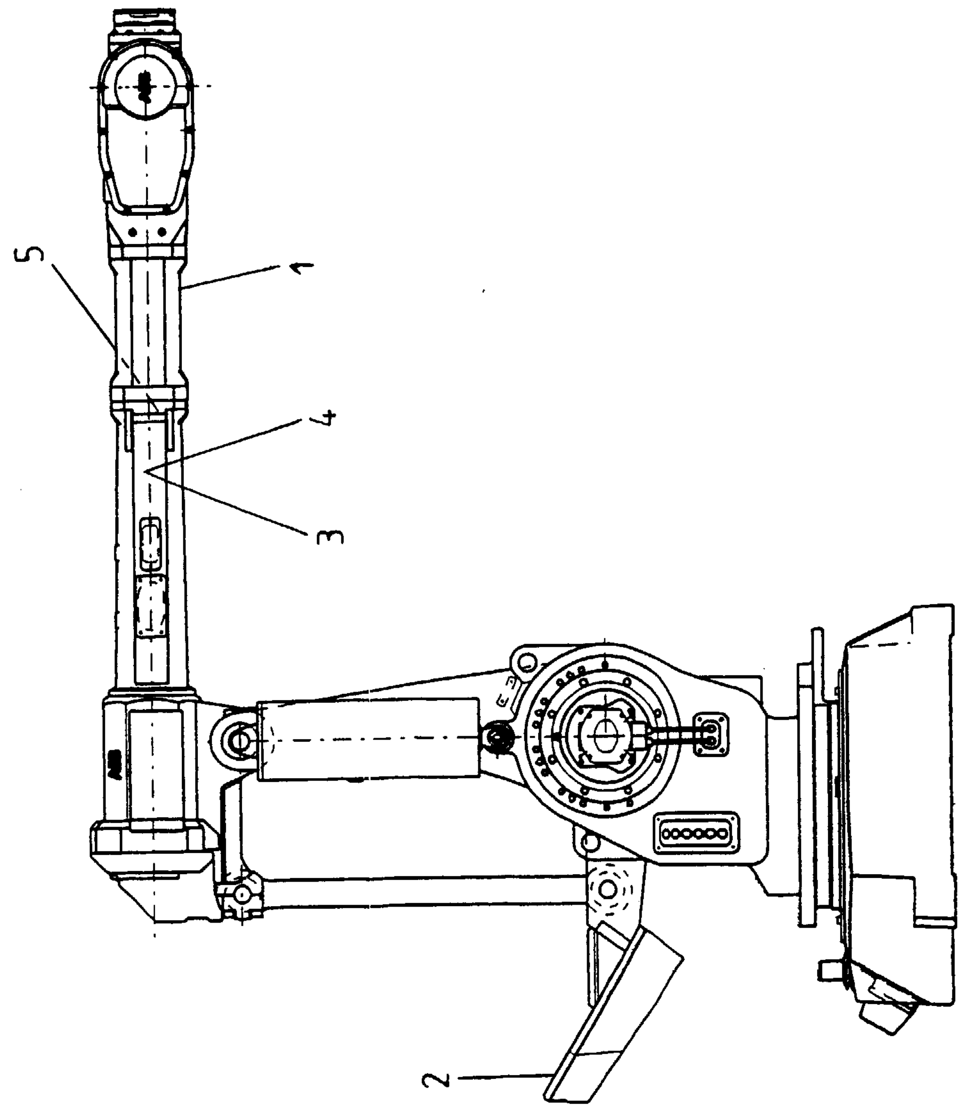

FOLDOUT 0:3

1.4 IRB 6400 /3.0-75

Itm	Qty	Name	Art. no	Rem
1	1	Extender	3HAA 1001-304	606 mm
2	1	Bal. weight	3HAB 4036-1	400 kg
3	1	Cable axis 5	3HAA 0001-YS	
4	1	Cable axis 6	3HAA 0001-YU	
5	1	Cover	3HAA 1001-305	

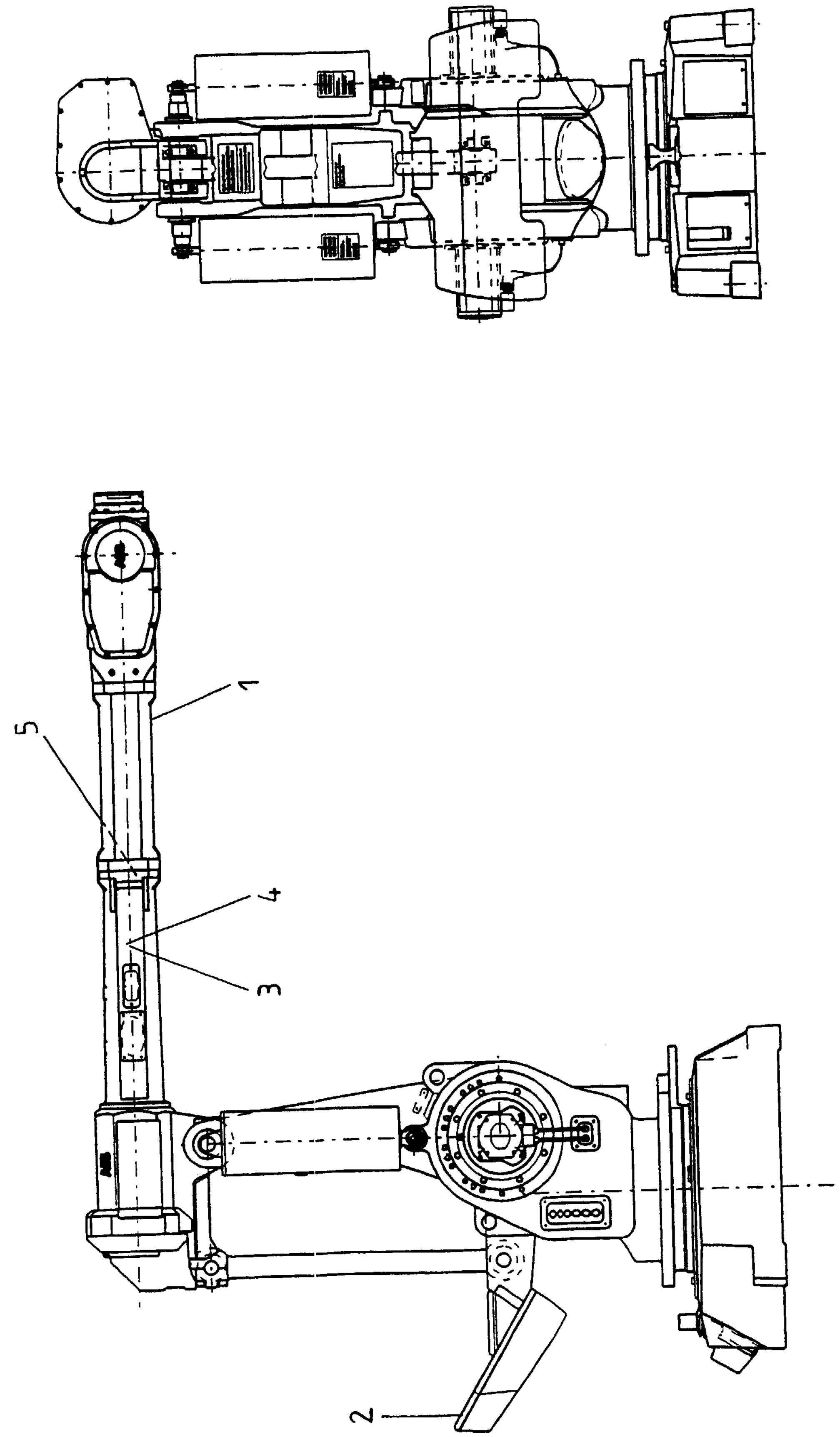

1.5 IRB 6400S /2.9-120

Itm	Qty	Name	Art. no	Rem
1		Frame	3HAB 4084-1	
202	4	Distance screw	2125 2052-232	see foldout 1:1
203	1	Rear cover	3HAB 4136-1	see foldout 1:1
204	1	Protective shield	3HAB 4138-1	see foldout 1:1
205	1	Cable bracket	3HAB 4147-1	see foldout 1:1
2	1	Adapter for bal. weight	3HAA 0001-ST	
3	2	Balancing unit	3HAB 4218-1	
4	2	Shaft	3HAA 1001-317	
5	1	Extender 404 mm	3HAA 0001-301	
6	1	Lower cable	3HAB 4249-1	
7	1	Upper cable, complete	3HAB 4165-1	
8	1	Cable axis 5	3HAA 0001-YS	
9	1	Cable axis 6	3HAA 0001-YU	
10	1	Motor axis 2	3HAB 4039-1	
11	1	Cover	3HAA 1001-302	
12	1	Cable axis 2	3HAB 4252-2	
13		Div. parts		

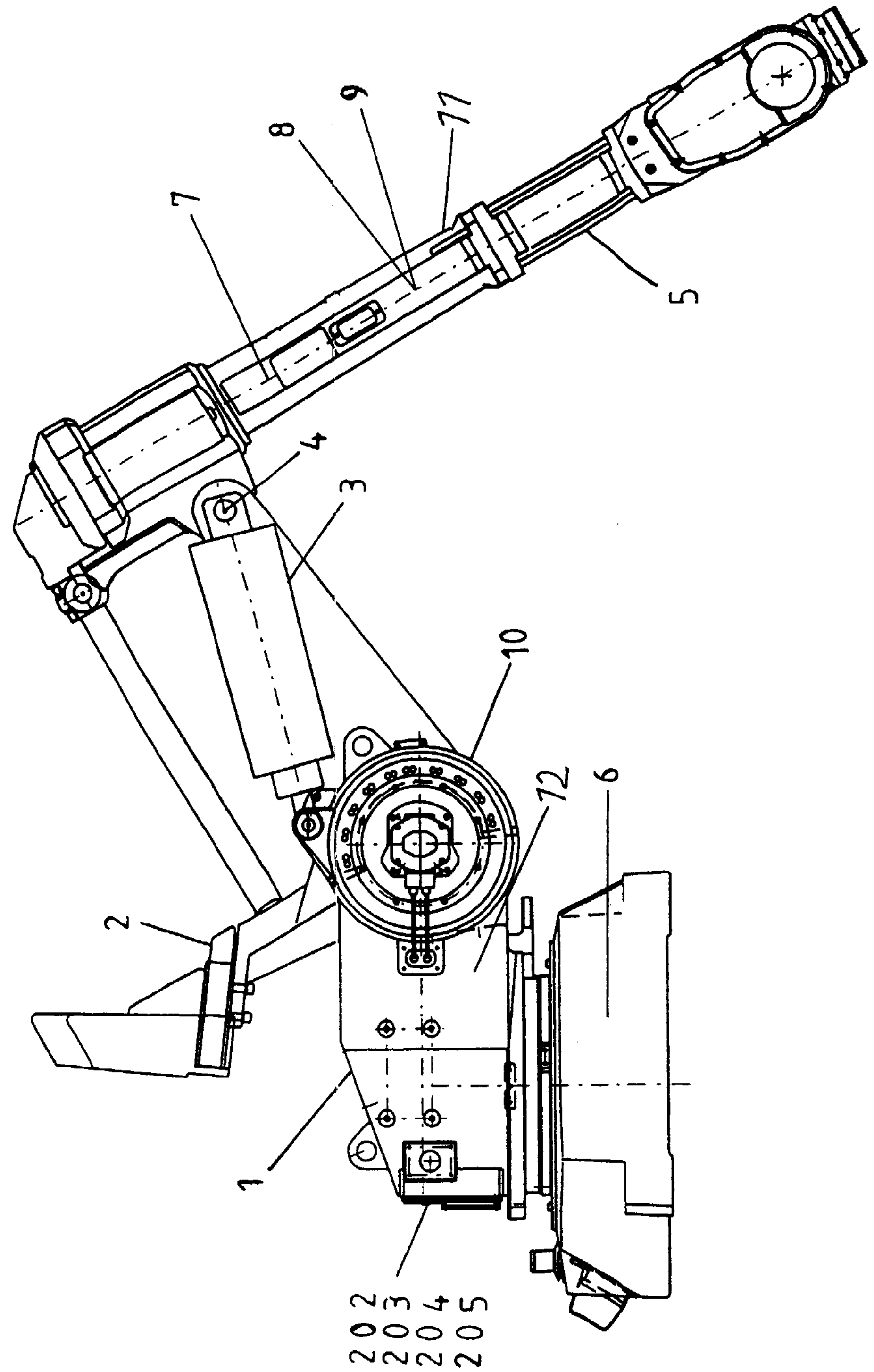

1.6 IRB 6400PE /2.25-75

Itm	Qty	Name	Art. no	Rem
1	1	Motor axes 1, 2 and 3	3HAB 4043-1	
2	1	Gear 2 and 3	3HAB 4226-1	
3	1	Protective plate	3HAA 1001-609	
4	1	Cable upper arm	3HAB 4483-1	
5	1	Tube shaft	3HAB 4453-1	
6	1	Fan, cooling device for axis 1	3HAA 0001-AAB	not on foldout
7	1	Cover	3HAA 1001-573	
9		Div. parts		

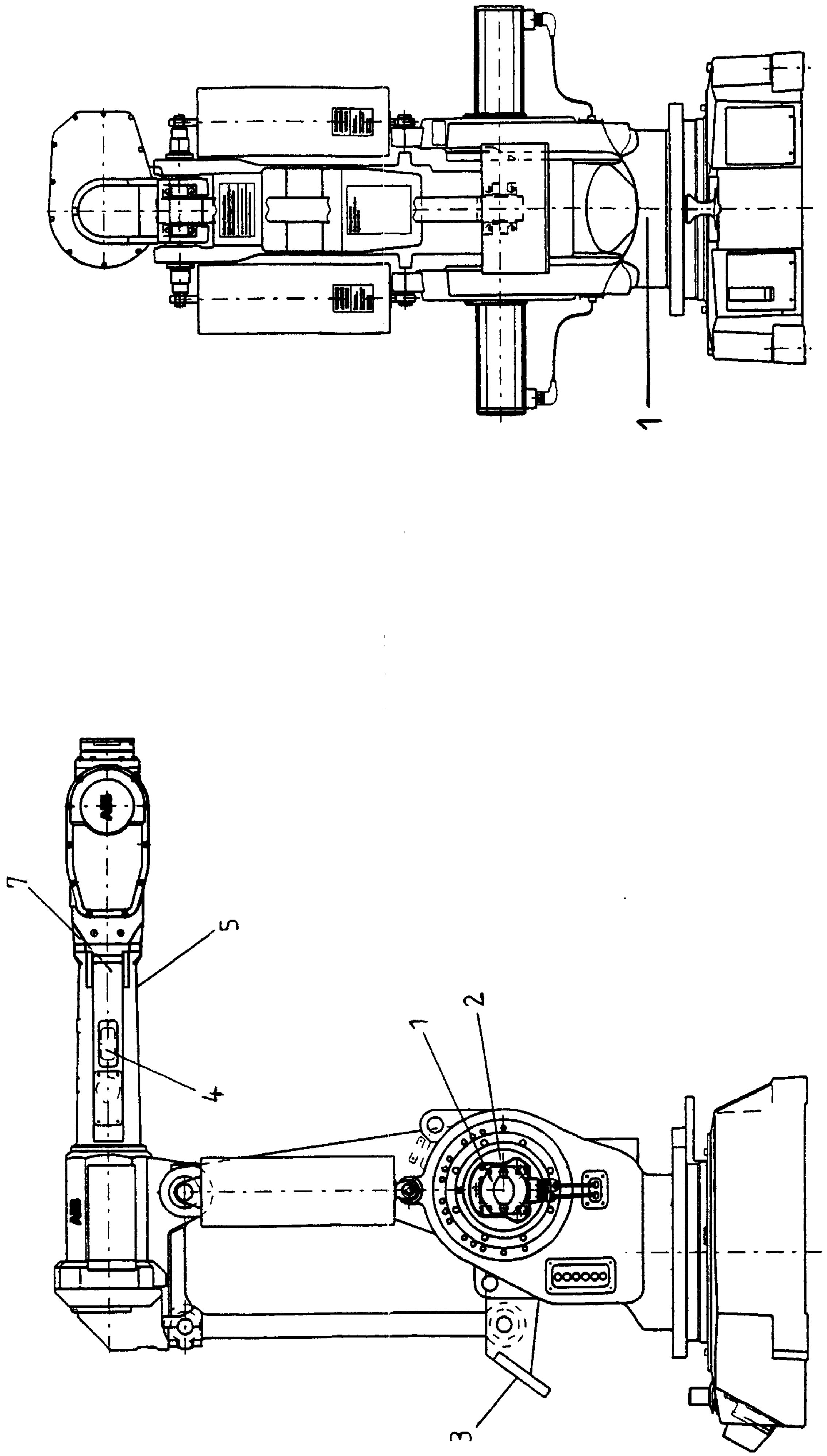

Rev. ind.	Revision	Appd	Year	Week

==

TECHNICAL DESTINATION
TEKNISK BESTÄMMELSE

Surface treatment of manipulator IRB 6400/F
Ytbehandling av manipulator IRB 6400/F

==

THE MANIPULATOR IS DIVIDED IN 3 ZONES
MANIPULATORN ÄR INDELAD I 3 ZONER
ZON 1 HARD EXPOSED AREA / HÅRT UTSATT YTA
ZON 2 EXPOSED AREA / UTSATT YTA
ZON 3 NOT HARD EXPOSED AREA / MINDRE UTSATT YTA

1 ZONE 1 (See sheet 3) / ZON 1 (SE blad 3)

1.1 CHEMICAL RESISTANCE / KEMIKALIEBESTÄNDIGHET
Environment class M4A/RS10 acc.to corrosion norm ST BK-N4
Miljöklass M4A/RS10 enligt rostskyddsnorm ST BK-N4

1.2 UNDER COAT / GRUNDFÄRG
Acc.to SSG-GD80 / colour acc.to NCS 1668 Y62R
(2-component resinous epoxy painted on blasted ,anodized or thoroughly cleaned surface.
Product: Nordsjö DUATAR HM) T=100 μm
Enligt SSG-GD80 / kulör enligt NCS 1668 Y62R
(2-komponent hartsmodifierad epoxi applicerad på blästrad ,anodiserad eller noggrann rengjord yta.
Produkt: Nordsjö DUATAR HM) T=100 μm

1.3 TOP COAT / TÄCKFÄRG
Acc.to SSG-TD220 / colour acc.to NCS 1668 Y62R
(2-component resinous epoxy.
Product: Nordsjö DUATAR HM) T=200 μm
Enligt SSG-TD220 / kulör enligt NCS 1668 Y62R
(2-komponent hartsmodifierad epoxi.
Produkt: Nordsjö DUATAR HM) T=200 μm

Prepared: T Hoffren 940914	Responsible department: SEROP/ KMP	Title: SURFACE TREATMENT IRB6400F	
Approved: I Svensson	Take over department: SEROP/	YTBEHANDLING IRB 6400F	Language: 82
Revision		Document No: 3HAB 4382-14	Cont: 2
ABB	ABB Robotics		Sheet: 1

Rev. ind.	Revision	Appd	Year	Week

2 ZONE 2 (See sheet 3) / ZON 2 (SE blad 3)

2.1 EXPOSED AREA / UTSATT YTA
Manually degreased acc.to MB 2061 0013-1
Manuellt avfettad enligt MB 2061 0013-1

2.2 UNDER COAT / GRUNDFÄRG
The same quality and thickness of paint as in zone 1.
Samma kvalite och skikttjocklek som i zon 1.

2.3 TOP COAT / TÄCKFÄRG
The same quality and thickness of paint as in zone 1.
Samma kvalite och skikttjocklek som i zon 1.

3 ZONE 3 (See sheet 3) / ZON 3 (SE blad 3)

3.1 NOT HARD EXPOSED AREA / MINDRE UTSATT YTA
Existing corrosion coat as the first layer,
Manually degreased acc.to MB 2061 0013-1
Befintlig rostskyddsfärg bildar första skikt,
Manuellt avfettad enligt MB 2061 0013-1

3.2 UNDER COAT / GRUNDFÄRG
The same quality and thickness of paint as in zone 1.
Samma kvalite och skikttjocklek som i zon 1.

3.3 TOP COAT / TÄCKFÄRG
The same quality and thickness of paint as in zone 1.
Samma kvalite och skikttjocklek som i zon 1.

NOTE ! Otherwise see painting instruction 3HAB 1383-9
OBS ! Övrigt se målningsintruktion 3HAB 1383-9

4 Rust-proofed / Rostskyddsbehandling

The machined visible surfaces treated with rust preventive Dinitrol 110 (art.no.1241 1905-16) after painting of other surfaces.

Bearbetade synliga ytor behandlas med rostskyddsmedel Dinitrol 110 (art.nr. 1241 1905-16) efter målning av övriga ytor.

Prepared: T Hoffren 940914	Responsible department: SEROP/ KMP	Title: SURFACE TREATMENT IRB6400F	
Approved: I Svensson	Take over department: SEROP/	YTBEHANDLING IRB 6400F	Language: 82
Revision		Document No. 3HAB 4382-14	Cont: 3
ABB	ABB Robotics		Sheet: 2

1.9 Base

Itm	Qty	Name	Art. no	Rem
	1	Base, complete	3HAA 0001-ABD	assy.
1	1	Base	3HAA 1001-653	
		Base, complete	3HAB 4666-1	assy.
2	1	Bottom plate	3HAA 1001-695	
3	1	Cable guide rail	3HAA 1001-691	
5	1	Stop shaft	3HAB 4082-1	
6	8	Screw	2121 2416-368	M6x16 8.8
8	2	Angle	3HAA 1001-154	

Rev Ind	Revision	Appd	Year	Week

Connector-cover. Shrinking hose will be glued over the standard shrinking hose and the connector on the cover close to the cover. The sealingpaste all around the connector and over the screws.

Kablage-lock. Krympslang limmas över krympslangen på kablage och kontakten på locket ända fram till locket. Fogmassa mot lock runt kontakten och över skruvarna.

Sealing paste , shrinking hose and drawing to be packed in the plastic bag and sealed.

Fogmassa , krympslang och ritning förpackas i plastpåse.

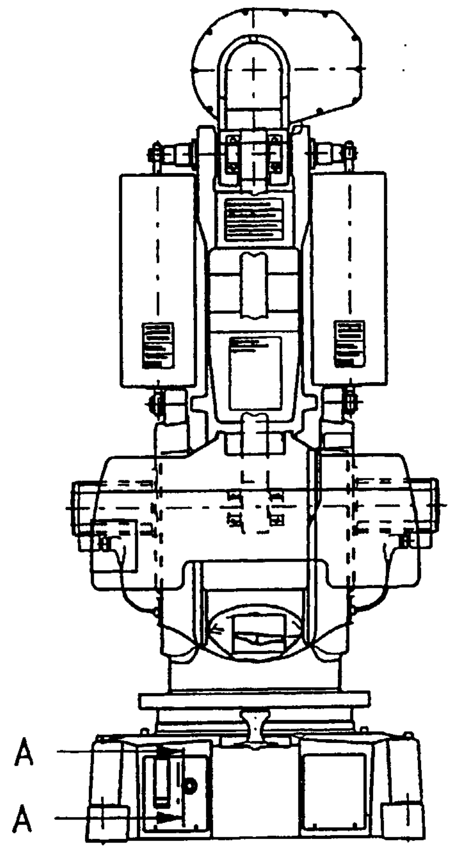

FOUNDRY ROBOT IRB 6400

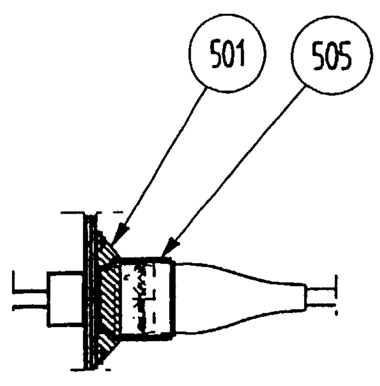

A - A

Quantity	Item No.	Article No.	Material, type, etc	Dimensions	Name of item	Note
1	517	3HAB 4536-1			Drawing Ritning	
1	516	2969 105-11		250x90x450x0,03	Plastic pag Plastpåse	
1 m	505	3HAA 1001-713		φ 13 / 40	Shrinking hose Krympslang rak	
1 tub	501	3HAB 3172-1	Latexfog		Sealingpaste Fogmassa	

Prepared		Responsible department	Title	
T Hoffren	940919	SEROP / KMP	Assembly set	
Approved		Take over department	Monteringssats	Language 82
I Svensson				
Revision			Document No.	Cont -
ABB	ABB Robotics		3HAB 4536-1	Sheet 1

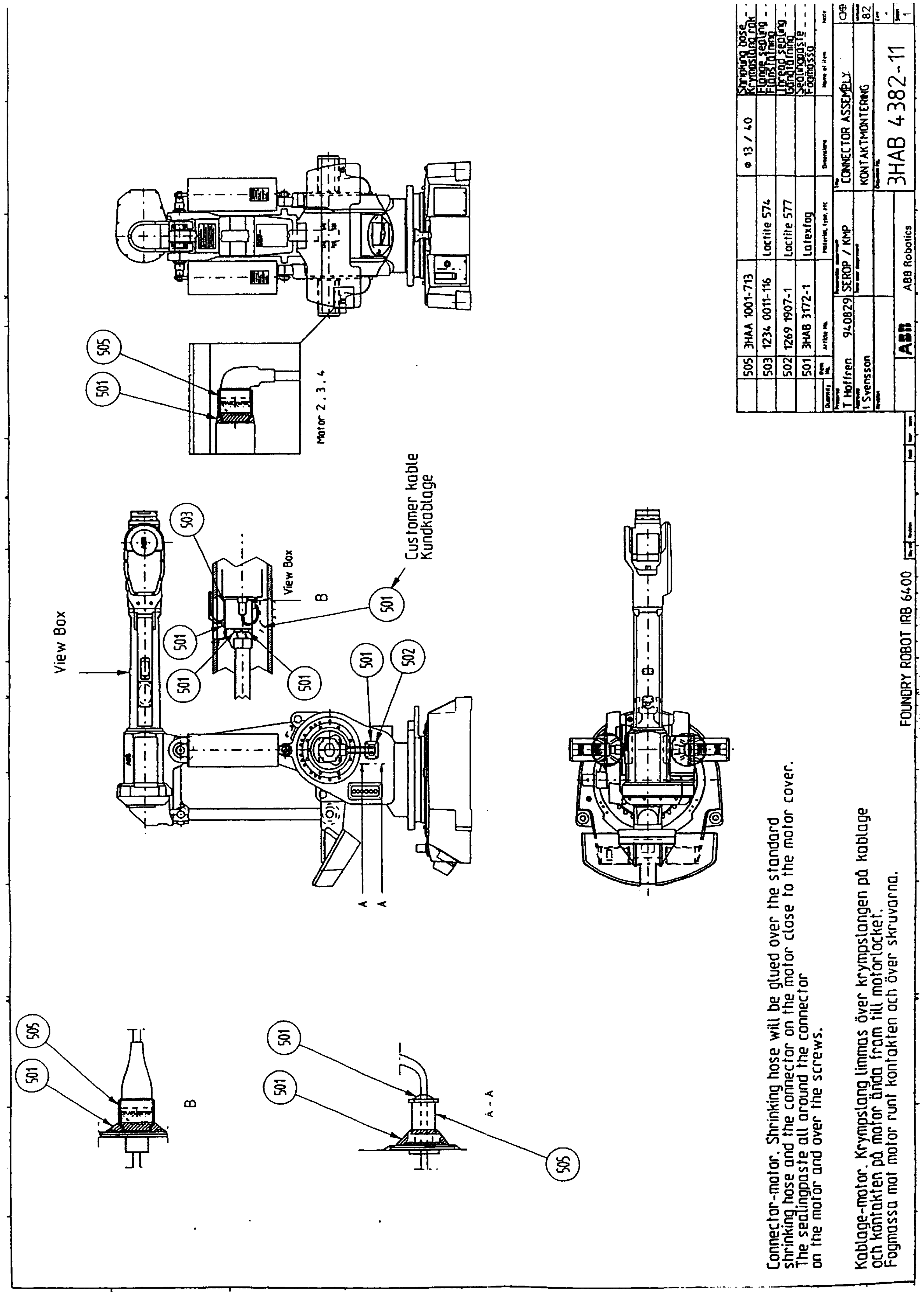

27	1	Sync.bracket	3HAB 4135-1	
28	1	Sync. plate axis 1	3HAA 1001-73	
29	4	Scew	2121 2411-287	M4x8
30	4	Plain washer	2151 2062-136	4.3x9x0.8
31	1	Bracket	3HAA 1001-144	
32	1	Sync.plate nonie	3HAA 1001-79	
33	1	Protective plate	2155 187-11	
34	1	Screw	2121 0596-31	M8x12 10.9
35	4	Screw	2121 2519-364	M6x10 8.8
41	7	Straps	2166 2055-3	L=186
42	1	Holder	3HAA 1001-668	
43	3	Screw	3HAB 3409-95	M16x140 12.9
44	3	Spring washer	3HAA 1001-181	
45	3	Screw	3HAB 3409-200	M12x140
46	3	Support washer	3HAA 1001-200	12.5x24x5.9
47	1	Axis 2 cabling	3HAB 4252-1	
	1	Axis 2 cabling	3HAB 4197-1	S /2.9-120
48	1	Axis 3 cabling	3HAA 0001-YY	
49	1	Signal cable axis 1	3HAB 4250-1	

IRB 6400S /2.9-120

202	4	Distance screw	2125 2052-232	L=140, M6
203	1	Rear cover	3HAB 4136-1	
204	1	Protective shield	3HAB 4138-1	
205	1	Cable bracket	3HAB 4147-1	

Rev Ind	Revision	Appd	Year	Week

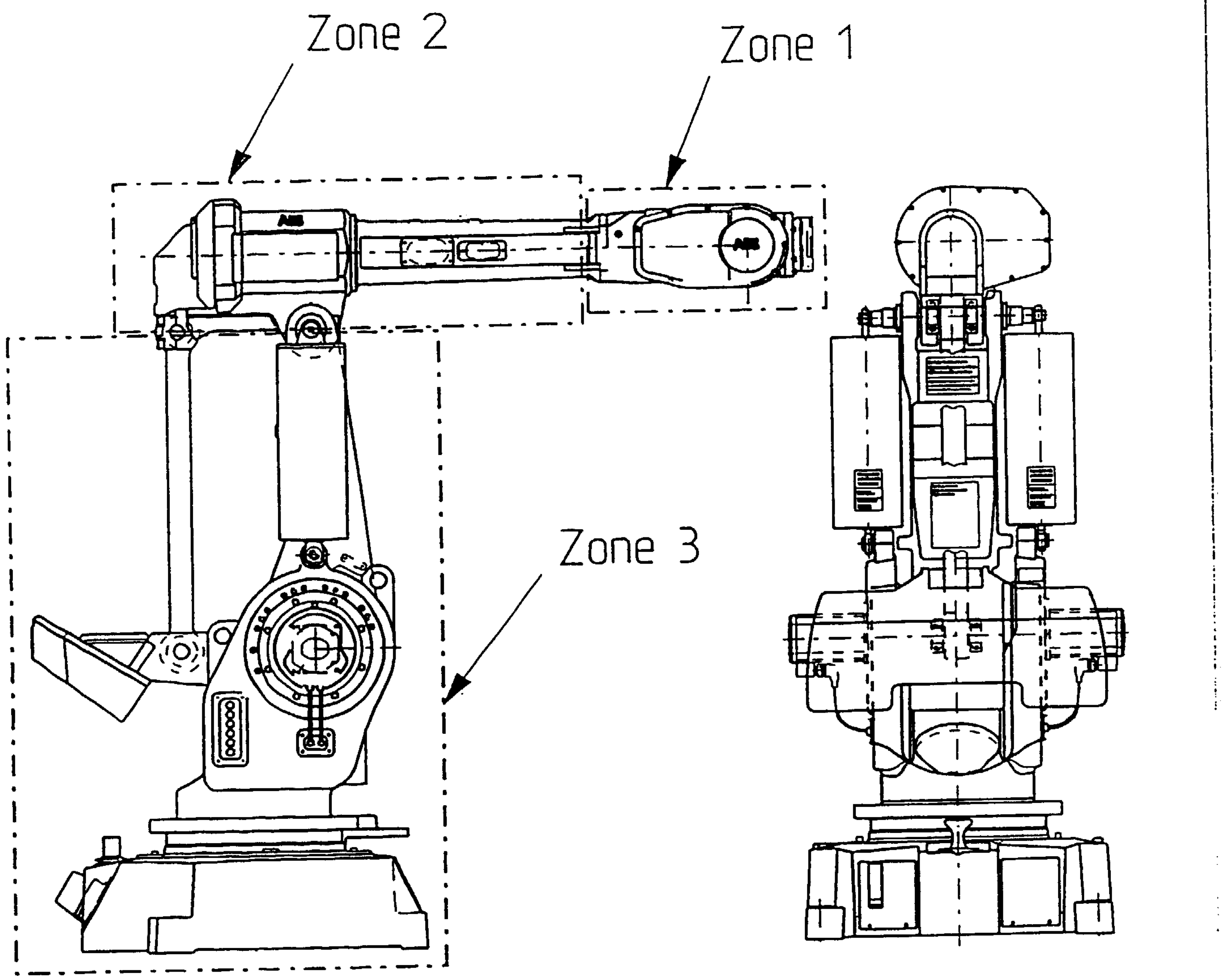

Prepared T Hoffren	940914	Responsible department SEROP/KMP	Title SURFACE TREATMENT IRB6400F	
Approved I Svensson		Take over department SEROP/	YTBEHANDLING IRB 6400F	Language 82
Revision			Document No.	Cont -
ABB	ABB Robotics		3HAB 4382-14	Sheet 3

Rev ind	Revision	Appd	Year	Week
			94	

Rust proofed :

Clearing: The surfaces have to be degreased.

Performance: Rust preventive on the marked surfaces. Mating surfaces and contact surfaces have to be treated just before assembly.Rust preventive must not be dry.

Rostskyddsbehandling :

Rengöring: Ytorna skall vara avfettade.

Utförande: På angivna ytor anbringas med pensel ett tunt lager rostskyddsmedel. Passningsytor och anliggningsytor skall behandlas strax före montaget. Dvs. medlet får ej vara torrt.

Prepared T Hoffren	94-09-14	Responsible department SEROP/KMP	Title Rust proofed	
Approved I Svensson		Take over department	Rostskyddsbehandling	Language 82
			Document No.	Of -
ABB	ABB Robotics		3HAB 4382-13	Sheet 1

1.7 Specification for foundry, IRB 6400F

New articles used in the Foundry version manipulator compared with the standard version.

Name	Art. no Foundry	Art. no Standard	Rem
Bearing axis 1	3HAB 4407-1	3HAA 1001-1	Foldout 1:2
Guard bearing axis 1	3HAB 4408-1		
Protective ring	3HAB 4460-1	3HAA 0085-5	
Ring	3HAB 4465-1	3HAA 1001-86	Foldout 5:3
O-ring	3HAA 1001-658		
O-ring	2152 011-414		Foldout 5:3
O-ring	2152 012-429		Foldout 5:3
Upper arm	3HAB 4385-1	3HAB 4452-1	
Arm extender 2.8	3HAB 4529-1	3HAA 1001-301	
Arm extender 3.0	3HAB 4530-1	3HAA 1001-304	
Wrist F /120 kg	3HAB 4506-1	3HAB 4196-1	Elmo
Wrist F /150 kg	3HAB 4506-2	3HAB 4196-2	Elmo
Rust preventive	3HAB 4073-1		Dinitrol 81
Rust preventive	1241 1905-16		Dinitrol 110
Sealing paste	3HAB 3172-1		
Flange sealing	1234 001-116		

Surface treatment (painting, rust-proofed) of the Foundry version is made according to:

Technical provision	3HAB 4382-14 and 3HAB 4382-13	See foldout 0:7, 0:8

Connectors are sealed with shrinking hose according to:

Assembly set Technical provision	3HAB 4536-1 and 3HAB 4382-11	See foldout 0:9

Covers are sealed according to:

Technical provision	3HAB 4382-12	See foldout 0:10

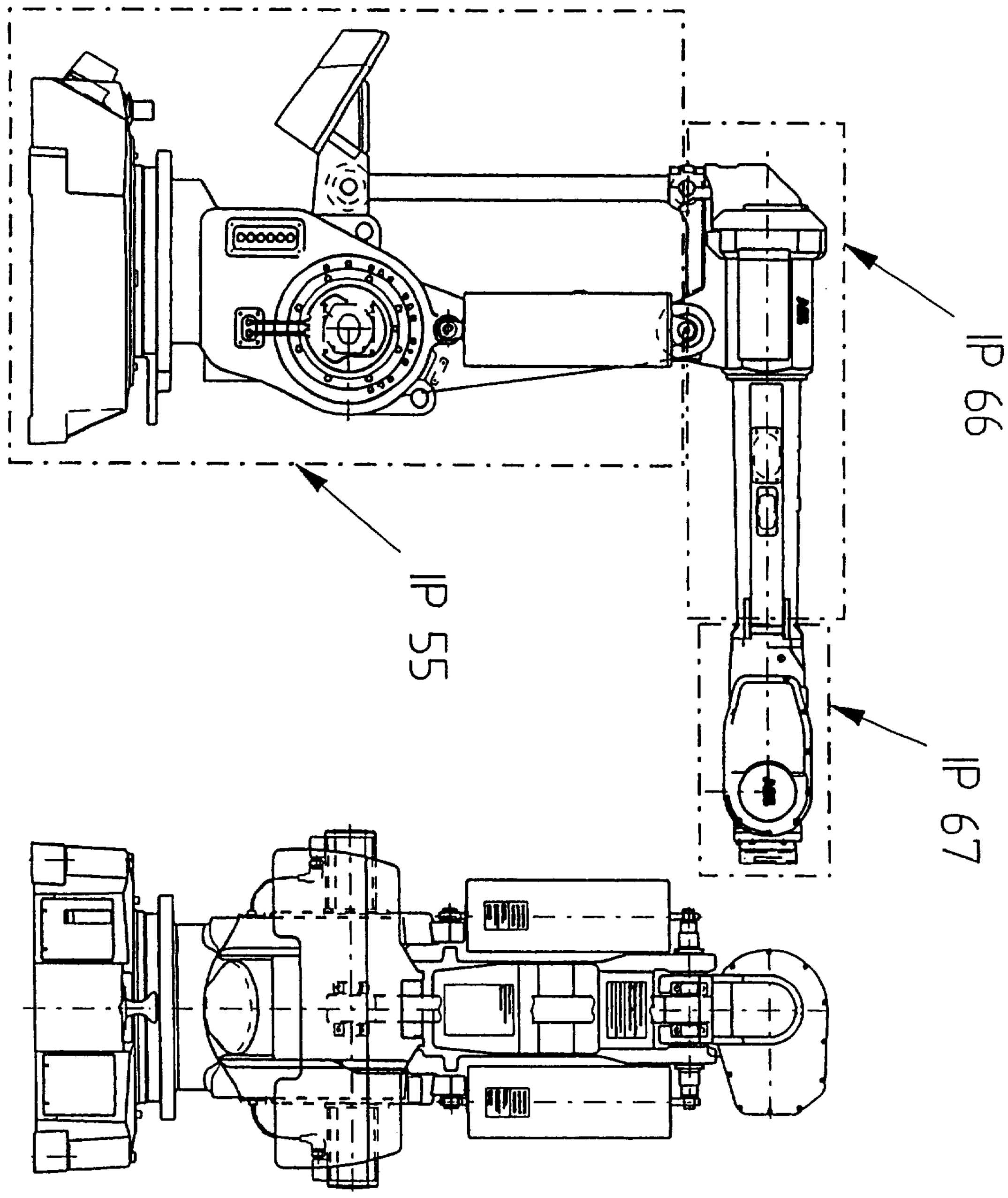

The covers of the fan have to be sealed with sealing paste.

Locken till fläkt skall tätas med fogmassa.

Through bolt / threads must be sealed with Loctite 577.

Genomgående skruvar / gängor skall tätas med Loctite 577.

Cover A

A1 Cover is included in lower cable
A2 Cover for air and the switches
A3 Harting connector is included in lower cable
A4 Cover is included in stop shaft
A5 Cover is included in measure card unit
A6 Cover for motor 1
A7 Cover is included in cable motor 2
A8 Cover is included in cable motor 3
A9 Cover is included in brake release unit
A10 Cover with three holes for upper cable
A11 Three covers are included in upper cable

Lock A

A1 Lock ingår i fotkablaget
A2 Lock för luft och brytarna
A3 Harting dornet ingår i fotkablaget
A4 Lock ingår i stoppinne
A5 Lock ingår i seriemätkortet
A6 Lock över motor 1
A7 Lock ingår i motor 2 kablaget
A8 Lock ingår i motor 3 kablaget
A9 Lock ingår i bromslossningskortet (Även rund gummi)
A10 Lock med 3 hål för ö-kablaget
A11 3 lock ingår i ö-kablaget

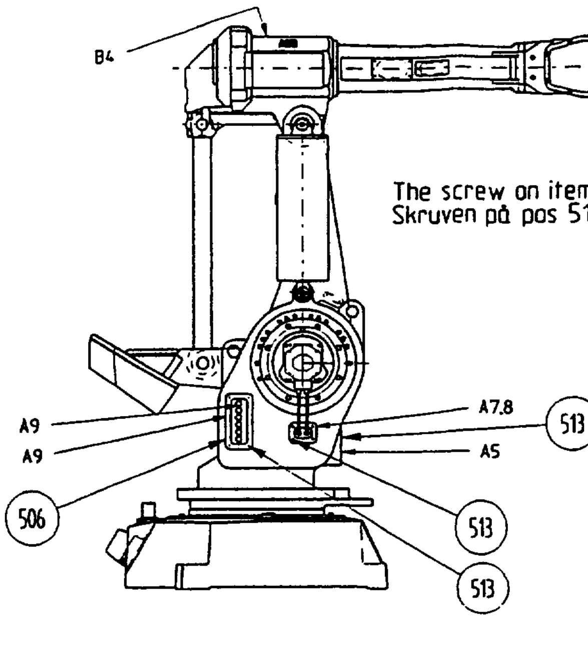

The screw on item 513 ,tightening torque 10 Nm
Skruven på pos 513 ,åtdragningsmoment 10 Nm

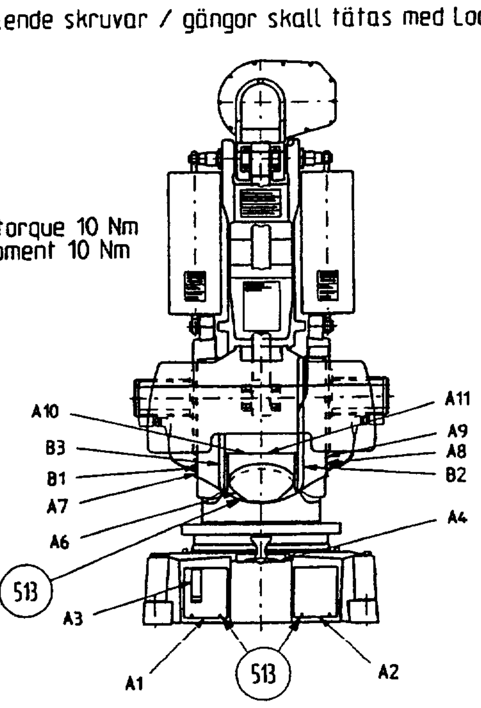

Cover B

B1 . B2 . B3 Protective hood on frame
B4 Protective hood on armhouse

Lock B

B1 ,B2 ,B3 Plastplugg på stativet
B4 Plastplugg på armhuset

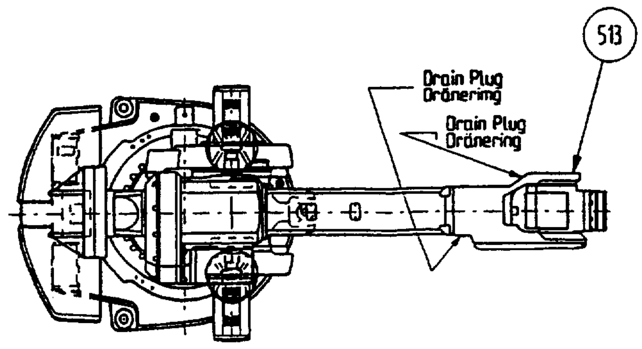

Sealingpaste must be formed around all covers, in order to get accurate sealing against the casting .

Fogmassa formas runt alla lock, så att locken låtar mot gjutet.

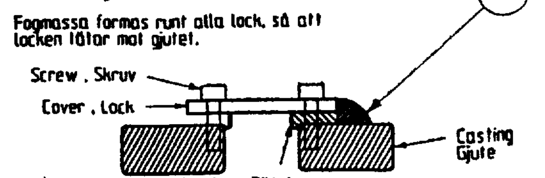

Cover A . Lock A

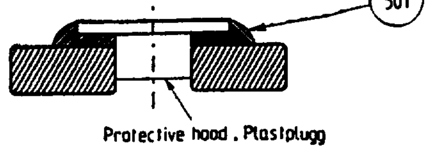

Cover B . Lock B

513	2152 2032-3		Φ6,7x11x1	Sealing washer Tätningsbricka
506	3HAB 4267-1			Cover Lucka
502	1269 1907-1	Loctite 577		Thread sealing Gängtätning
501	3HAB 3172-1	Latexfog		Sealing paste Fogmassa

T Halfren 940829 SEROP / KMP
I Svensson

COVER ASSEMPLY
LOCKMONTERING

ABB ABB Robotics

3HAB 4382-12

82

1

1.8 Axis 1, complete

Itm	Qty	Name	Art. no	Rem
	1	Axis 1	3HAB 4161-1 3HAB 4651-1	No customer connections
	1	Axis 1	3HAB 4161-2 3HAB 4651-2	With customer connections
	1	Axis 1	3HAB 4161-3 3HAB 4651-3	S /2.9-120
1	1	Frame	3HAB 4166-1	see foldout 1:2
1	1	Frame	3HAB 4166-2	see foldout 1:2
2	1	Base	3HAA 0001-ABD 3HAB 4666-1	
3	1	Brake release unit	3HAA 0001-ADY	
4	13	Screw	2121 2411-368	M6x16
5	1	Cable protection	3HAA 1001-718	
6	15	Screw	3HAB 3409-73	M12x70 12.9
7	15	Plain washer	3HAA 1001-632	13x24x2.5
8	1	Loctite 242	1269 0014-410	
9	4	Screw	2121 2519-493	M10x25
10	4	Plain washer	2151 2062-173	10.5x22x2
11	1	Motor	3HA 4039-1	
12	1	O-ring	2152 0431-17	234.54x3.53
13	1	Loctite 577	1269 1907-1	
14	1	Friction ring	3HAA 1001-613	
15	1	Screw	3HAB 3409-62	M10x100
16	1	Sealing liquid	1236 0012-202	Permatex3
18	13	Screw	2121 2411-370	M6x20
19	5	Plain washer	2151 2062-153	6.4x12x1.6
20	1	Symbol	2940 412-1	Earth sign
21	1	Base cabling	3HAB 4248-1	Without customer connection
	1	Base cabling	3HAB 4249-1	With customer connection, S /2.9-120
22	1	Cover	3HAA 1001-700	
23	1	Nipple	2529 256-1	
24	1	Protective hood	2522 2101-15	
25	2	Screw	2121 2519-459	M8x40 8.8
26	2	Plain washer	2151 2062-165	8.4x16x1.6

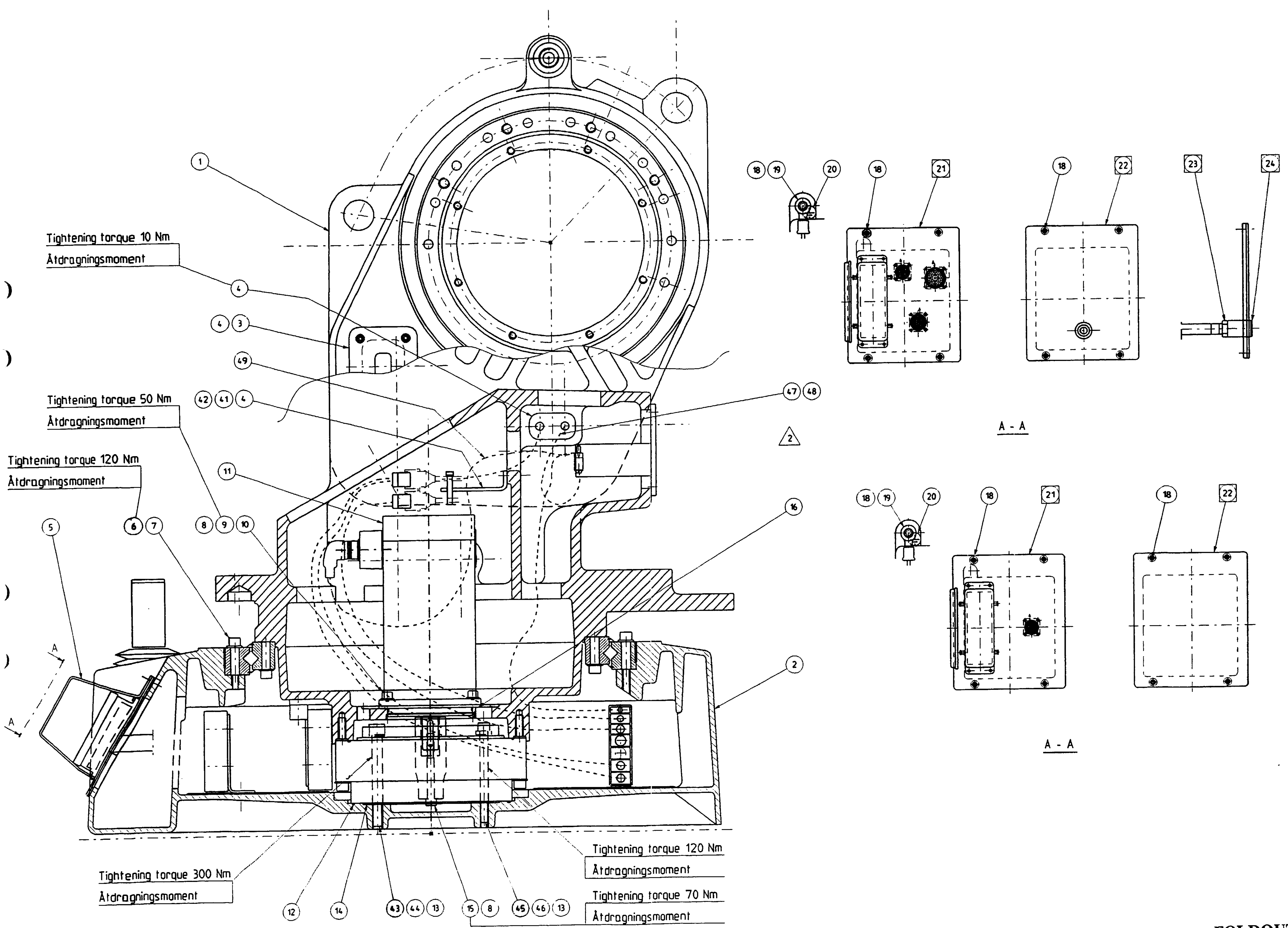

Tightening torque 10 Nm
Åtdragningsmoment
Tightening torque 50 Nm
Åtdragningsmoment
Tightening torque 120 Nm
Åtdragningsmoment
Tightening torque 300 Nm
Åtdragningsmoment
Tightening torque 120 Nm
Åtdragningsmoment
Tightening torque 70 Nm
Åtdragningsmoment
A - A
A - A
A
A

FOLDOUT 1:1

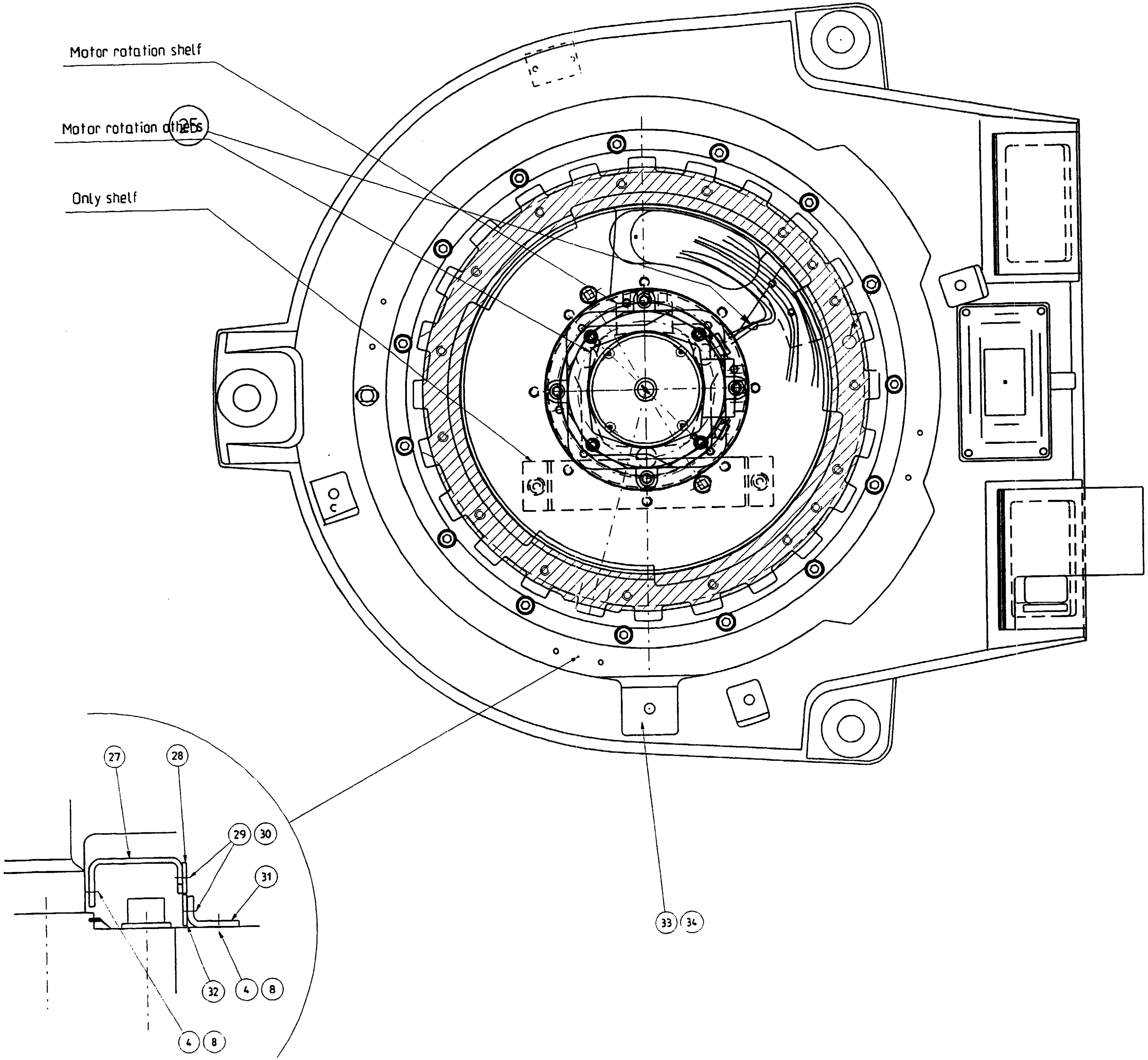

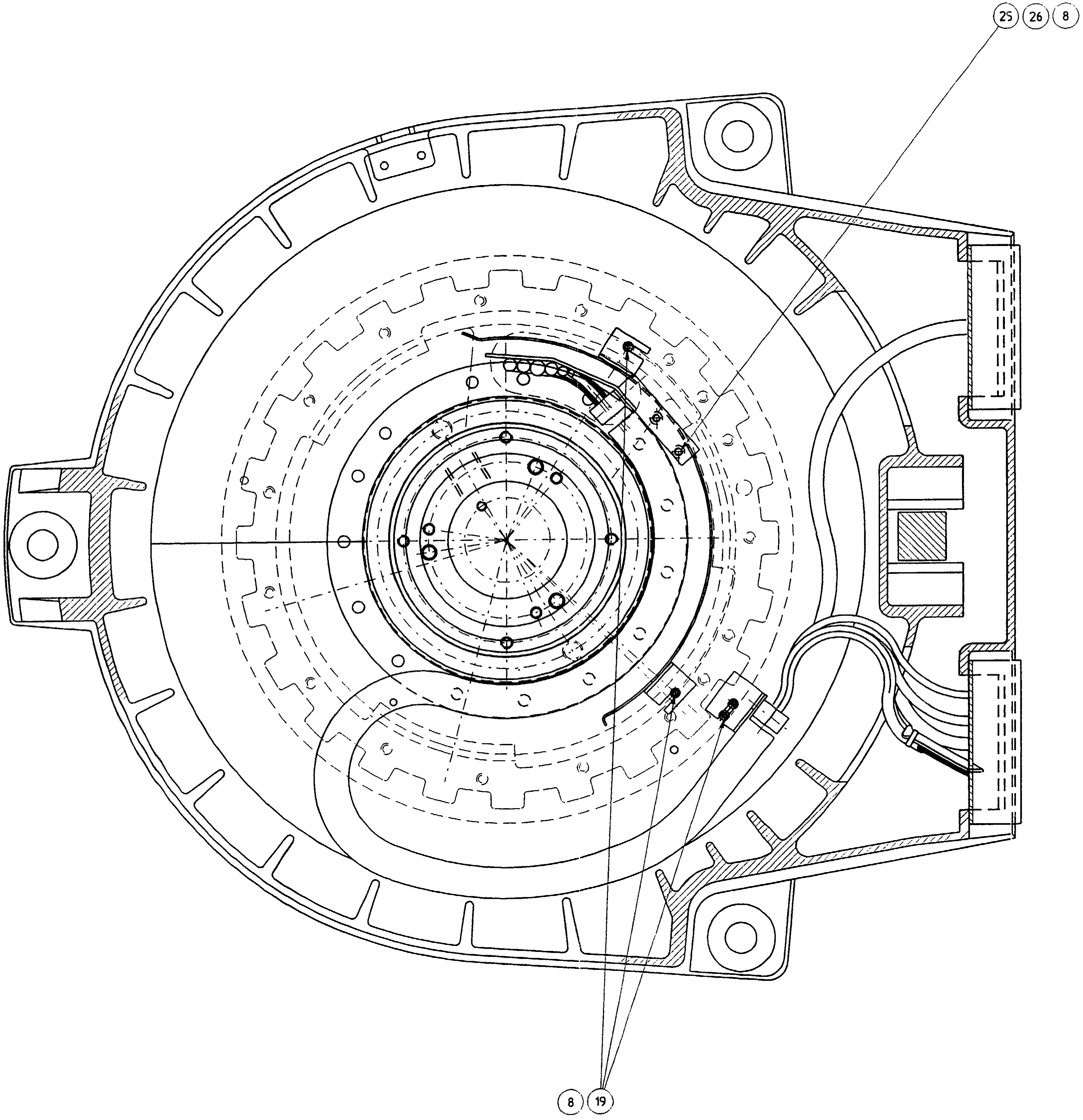

FOLDOUT 1:3

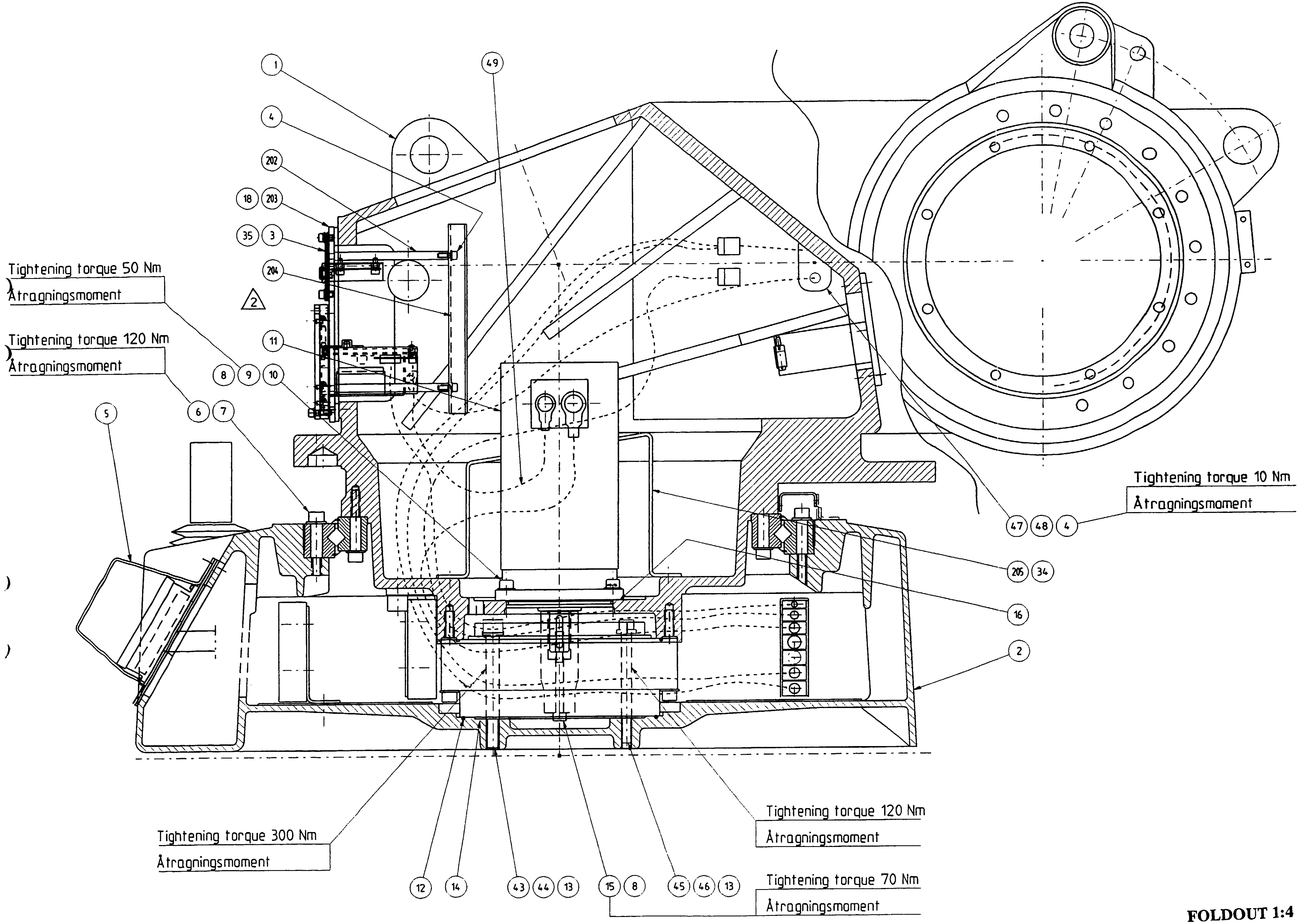

1
4
202
18
203
35
3
204
11
8
9
10
49
Tightening torque 50 Nm
Åtragningsmoment
Tightening torque 120 Nm
Åtragningsmoment
5
6
7
2
Tightening torque 10 Nm
Åtragningsmoment
47
48
4
205
34
16
2
Tightening torque 300 Nm
Åtragningsmoment
Tightening torque 120 Nm
Åtragningsmoment
12
14
43
44
13
15
8
45
46
13
Tightening torque 70 Nm
Åtragningsmoment

FOLDOUT 1:4

1.10 Frame, complete

Itm	Qty	Name	Art. no	Rem
	1	Frame, complete	3HAB 4166-1	
	1	Frame, complete	3HAB 4166-2	S /2.9-120
1	1	Frame	3HAB 4150-1	
1	1	Frame	3HAB 4084-1	S /2.9-120
2	1	Bearing	3HAA 1001-1	
	1	Bearing	3HAB 4407_1	**Foundry**
3	15	Screw	3HAB 3409-73	M12x70 12.9
4	23	Plain washer	2551 2062-177	13x24x2.5
5	1	Plug	2522 2021-113	KR 1/2"
6	8	Screw	3HAB 3409-75	M12x90 12.9
7	3	Screw	3HAB 3409-95	M16x140 12.9
8	3	Spring washer	3HAA 1001-181	
9	3	Screw	3HAB 3409-200	M12x140 12.9
10	3	Support washer	3HAA 1001-200	12.5x24x5.9
11	1	O-ring	2152 0431-15	245.0x3.0
12	1	Reduction gear	3HAB 4079-1	
13	1	Friction ring	3HAA 1001-614	

1.12 Lower arm

Itm	Qty	Name	Art. no	Rem
1		Lower arm system	3HAB 4167-1	
2		Mtrlset axes 2-3	3HAB 4162-1	
3		Mtrlset robot complete	3HAB 4163-1	
1.1	1	Lower arm	3HAB 4168-1	
1.2	1	Parallel arm	3HAB 4170-1	
1.2.2	2	Clamp	3HAB 1001-13	
1.3	2	Spherical roller bearing	3HAB 4169-1	
1.4	2	Spacing sleeve	3HAB 4387-1	
1.5	2	Set screw	2122 2765-99	M20x20
1.6	2	Damper	3HAA 1001-81	
1.7	2	Damper	3HAA 1001-123	
1.8	4	Screw	2121 2519-453	M8x25
1.9	4	Washer	2151 2062-165	8.4x16x1.5
1.10	1	Damper	3HAA 1001-90	
1.11	1	Support plate	3HAA 1001-282	
1.12	2	Screw	2121 2763-364	M6x10
1.13	2	Damper	3HAA 1001-622	
1.14	4	Screw	2121 2416-368	M6x16
1.15	4	Plain washer	2151 2062-153	6.4x12x1.6
1.16	1	Locking liquid	1269 1907-1	Loctite 577
2.11.1	1	Bracket for sync.plate	3HAA 1001-104	
2.11.4	1	Sync.plate axis 2	3HAA 1001-74	
2.11.5	2	Screw	2121 2416-285	M6x6
2.11.6	2	Plain washer	2151 2062-153	6.4x12x0.8
2.11.7	2	Screw	2121 2416-366	M6x12
2.23	1	Sync.plate with nonie	3HAA 1001-79	
2.25	2	Screw	2121 2416-285	M4x6
2.26	2	Washer	2151 2062-136	4.3x9x0.8
3.133	2	Bearing	2213 3802-8	32073 X
3.134	2	V-ring	2216 264-16	
3.135	2	NILOS ring	2216 0085-5	
3.136	2	Lock nut	2126 2851-112	M60x2
3.137	2	Set screw	2122 2719-491	M10x20, cup-point
				See foldout 5:2
3.138	1	Spacer	3HAA 1001-125	
3.139	2	Spacer	3HAA 1001-126	

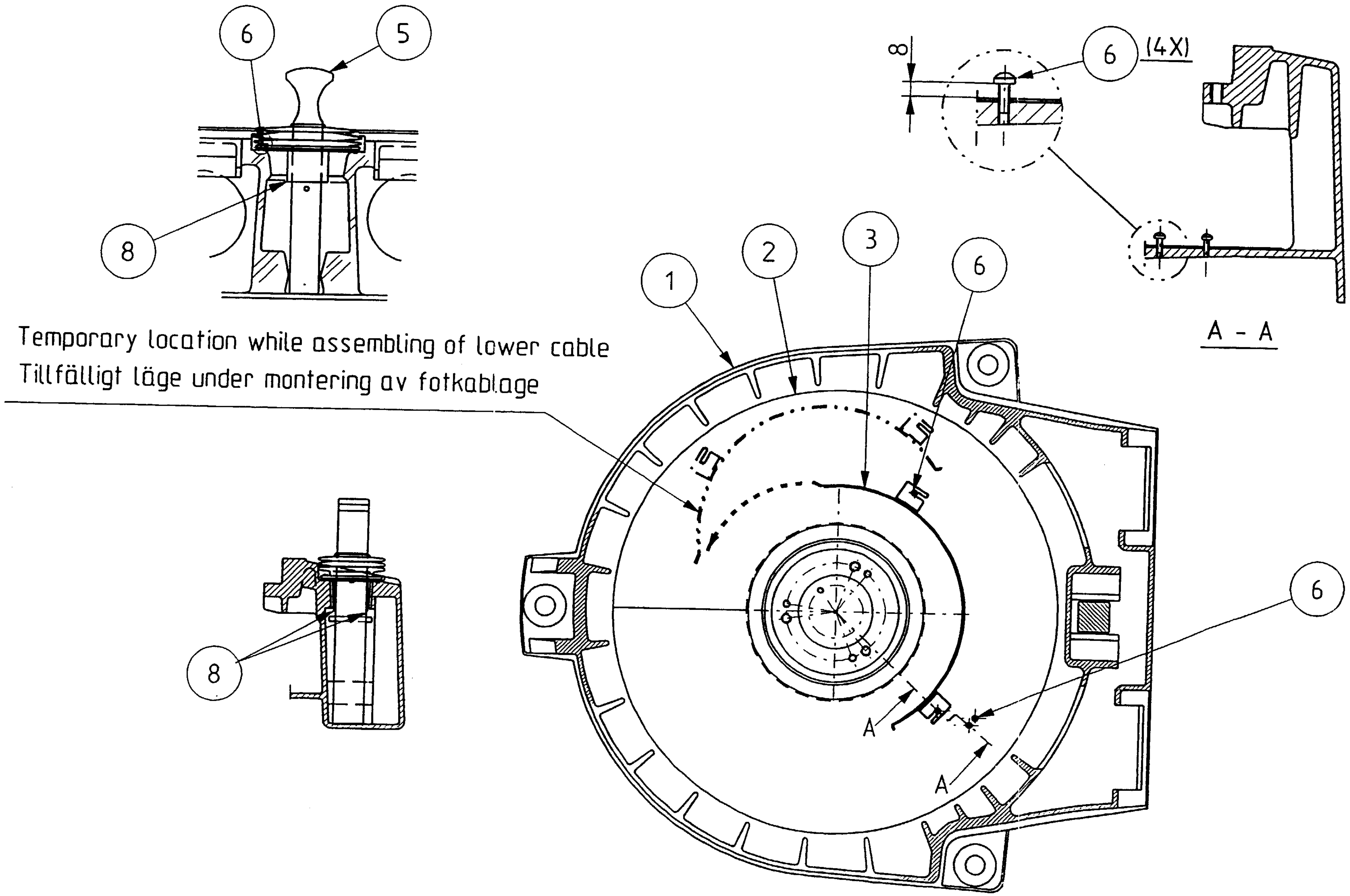
6
5
8
8
Temporary location while assembling of lower cable
Tillfälligt läge under montering av fotkablage
1
2
3
6
6
A
A
8
6
(4X)
A - A

FOLDOUT 2

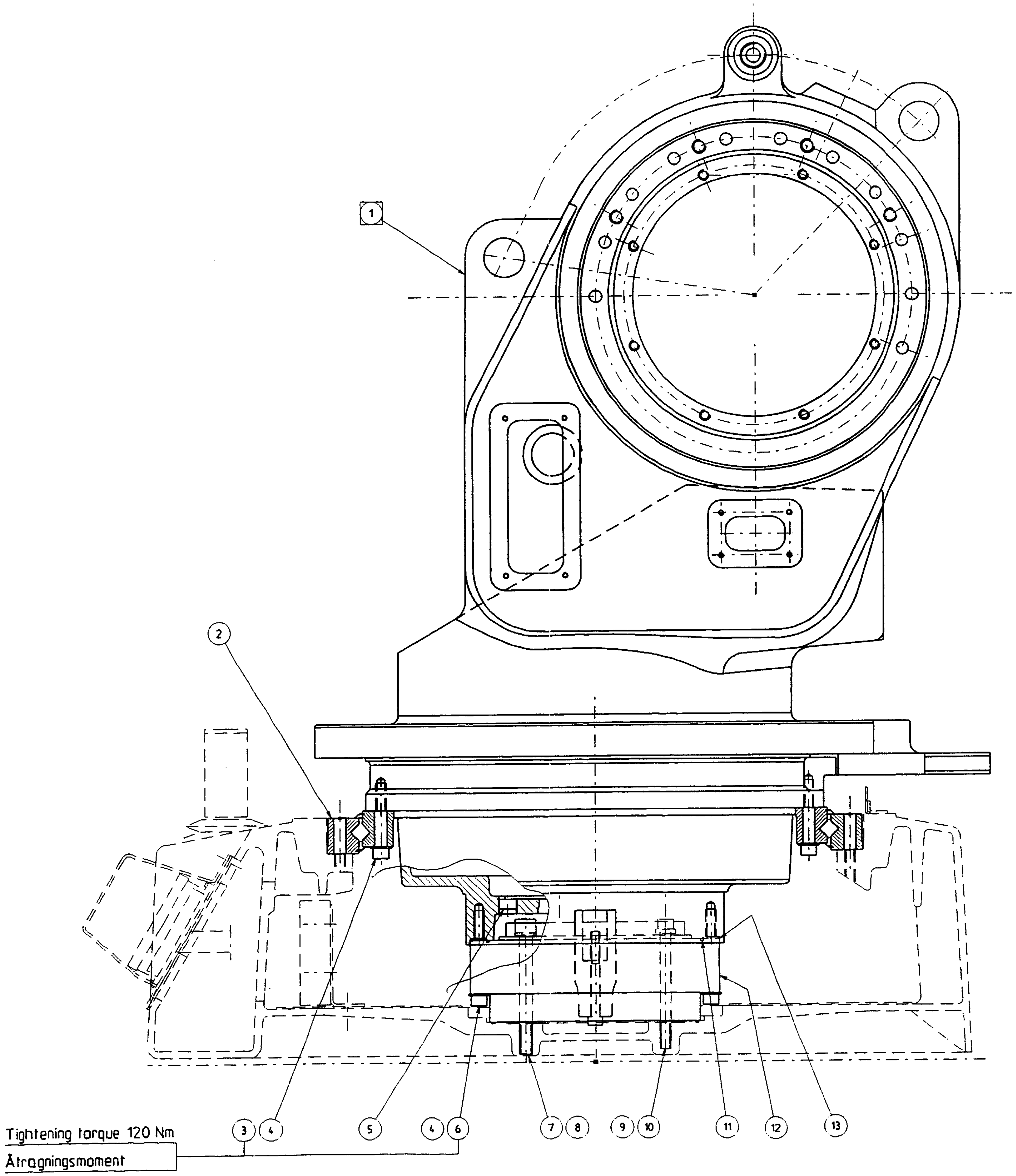
1
2
3
4
5
4
6
7
8
9
10
11
12
13
Tightening torque 120 Nm
Åtragningsmoment

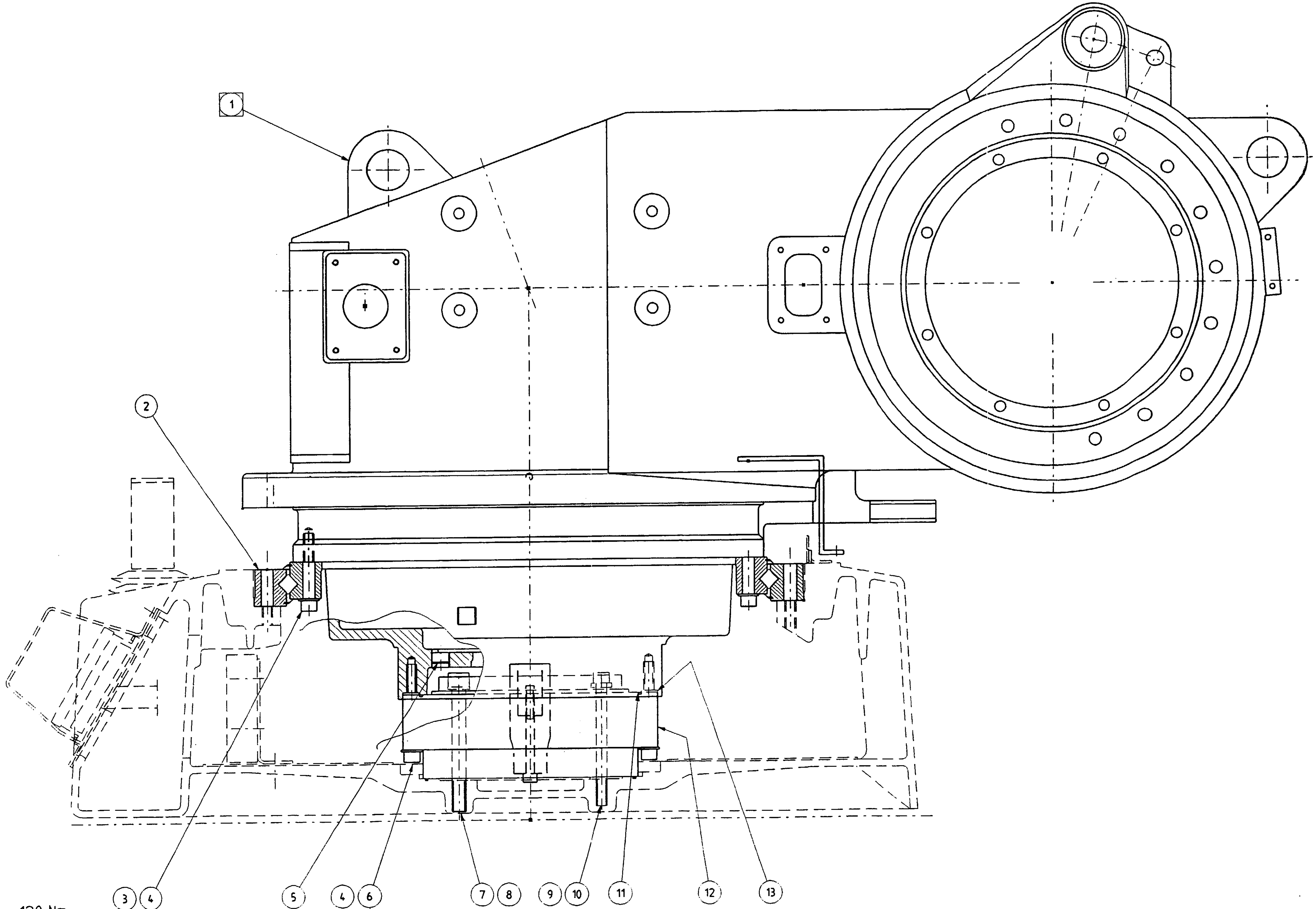

Tightening torque 120 Nm

Åtragningsmoment

FOLDOUT 3:2

1.11 Axes 2 and 3

Itm	Qty	Name	Art. no	Rem
1		Mtrlset axes 2 and 3	3HAB 4162-1	
2		Mtrlset robot compl.	3HAB4163-1	
1.3	2	Reduction gear	3HAB 4080-1	RV-250A
1.4	2	O-ring	2152 0431-17	234.54x3.53
1.5	6	Screw	3HAB 3409-200	M12x140 12.9
1.6	6	Support washer	3HAA 1001-200	12.5x24x5.9
1.7	6	Screw	3HAB 3409-95	M16x140 12.9
1.9	6	Spring washer	3HAA 1001-181	
1.14	2	O-ring	2152 2012-550	269.3x5.7
1.16	2	Friction ring	3HAA 1001-616	
1.28	2	O-ring	2152 2012-437	124.5x3
1.29	2	Motor axes 2-3	3HAB 4040-1	
	1	Motor axes 2	3HAB 4039-1	S /2.9-120
1.30	2	Screw	3HAB 3409-62	M10x100 12.9
1.31	8	Screw	2121 2519-493	M10x25 8.8
1.32	8	Plain washer	2151 2062-173	10.5x20x2
1.33	4	Magnetic plug	2522 122-1	1/4"
1.35	4	Washer	2152 0441-1	13.5x18x1.5
1.37	2	Friction ring	3HAA 1001-613	
1.38		Motorsocket, mtrlset	3HAB 4193-1	
1.38.1	2	Motor socket	3HAB 4056-1	
1.38.2	16	Screw	3HAB 3409-74	M12x80 12.9
1.38.3	16	Washer	3HAA 1001-632	13x21x2
2.3	1	Brake release unit	3HAA 0001-ADY	
2.4	13	Screw	2121 2411-368	M6x16 8.8
2.112	1	Cover	3HAA 0001-ZK	
2.119	1	Measure card unit	3HAB 4259-1	
2.119.1	1	Serial measurement board	3HAB 2213-1	DSQC 313
2.120	29	Screw	2121 2411-368	M6x16 8.8
2.121	1	Cover	3HAA 0001-SZ	
2.122	3	Cap	3HAA 1001-199	
2.146	1	Battery pack	4944 026-4	
2.167	2	Screw	2121 2411-374	M6x30
2.172	3	Screw	2121 2411-370	M6x20
2.178	1	Guide for cabling	3HAA 1001-721	

Spare Parts

1.211		Sync.plates ax.2, mtrlset	3HAA 0001-SU	
1.211.1	1	Bracket for sync.plate	3HAA 1001-104	
1.211.3	1	Sync.plate with nonie	3HAA 1001-79	
1.211.5	2	Screw	2121 2416-285	M4x6
1.211.6	2	Plain washer	2151 2062-136	4.3x9x0.8
1.211.7	2	Screw	2321 2416-366	M6x12
35	4	Screw	2121 2519-364	M6x10 8.8

Device for fork lift (not on the foldout):

2.4-120, 2.4-150, 2.8-120 and 3.0-75

		Lifting device set	3HAA 0001-SY	
	8	Screw	2121 2518-632	M16x60 8.8
	8	Washer	3HAA 1001-186	17x30x3
	2	Lifting device	3HAA 1001-257	
	2	Lifting device	3HAA 1001-258	

S /2.9-120

		Lifting device set	3HAB 4463-1	
	2	Bracket	3HAB 4139-1	
	8	Screw	2121 2519-628	M16x40 8.8
	8	Washer	2151 2062-185	17x30x3

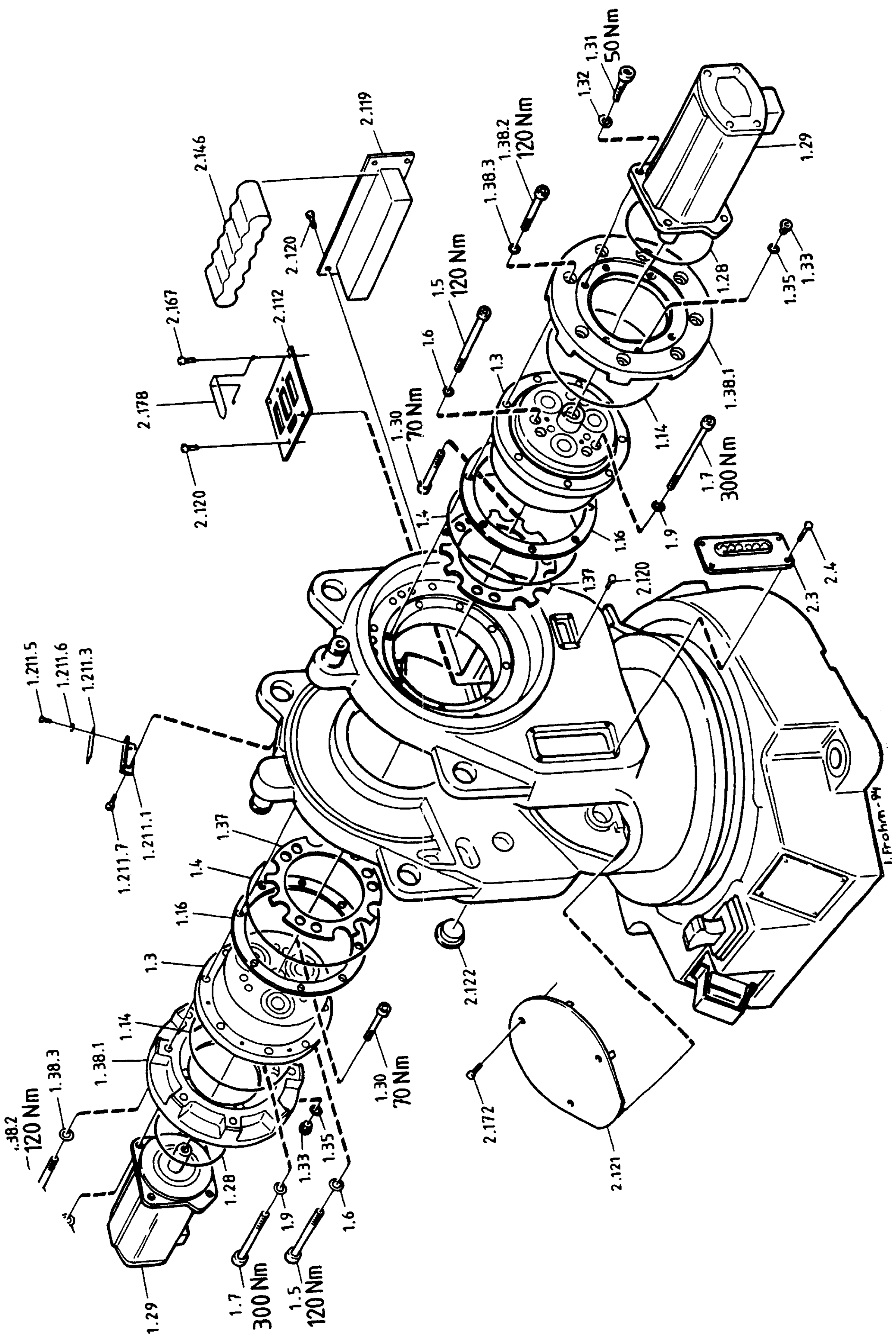

FOLDOUT 4:1

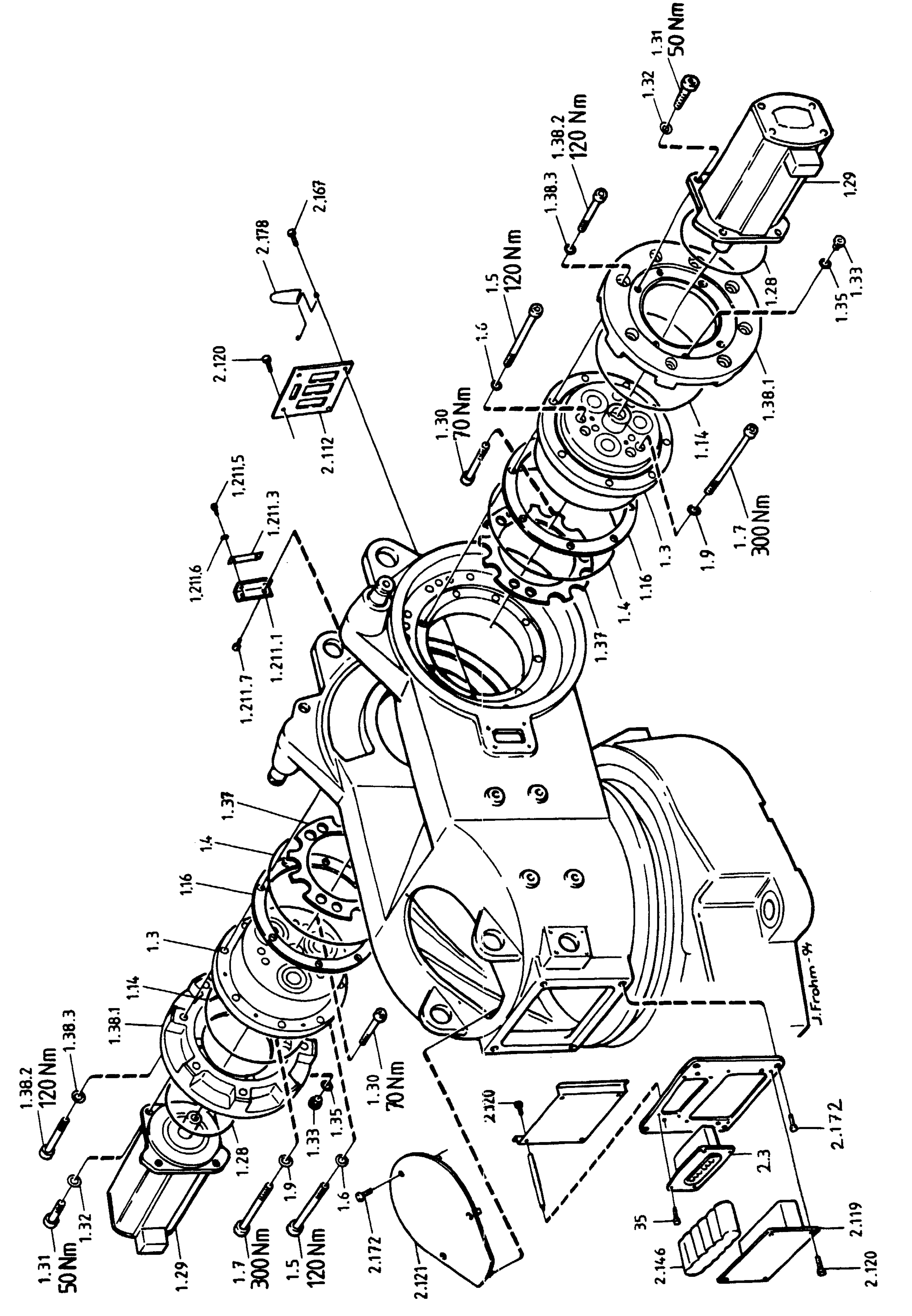

1.31
50 Nm
1.32
1.38.2
120 Nm
1.38.3
1.29
1.28
1.33
1.35
1.38.1
1.14
1.5
120 Nm
1.6
1.30
70 Nm
1.3
1.16
1.4
1.37
1.9
1.7
300 Nm
2.167
2.178
2.120
2.112
1.211.5
1.211.3
1.211.6
1.211.1
1.211.7
J.Frohm-94
2.172
2.3
2.119
2.120
2.146
35
2.121

Spare Parts

3.140	2	Sealing ring	3HAA 1001-173	6.4x15x3
3.143	4	Washer	3HAA1001-186	17x27x3
3.154	2	Protective plate	3HAA 1001-164	
3.155	2	Screw	2121 2763-364	M6x10
3.160	4	Screw	3HAB 3409-88	M16x70 12.9
3.202	2	Shaft	3HAA 1001-127	
	2	Shaft	3HAA 1001-317	S /2.9-120
4		Upper cable		See foldout 5:1

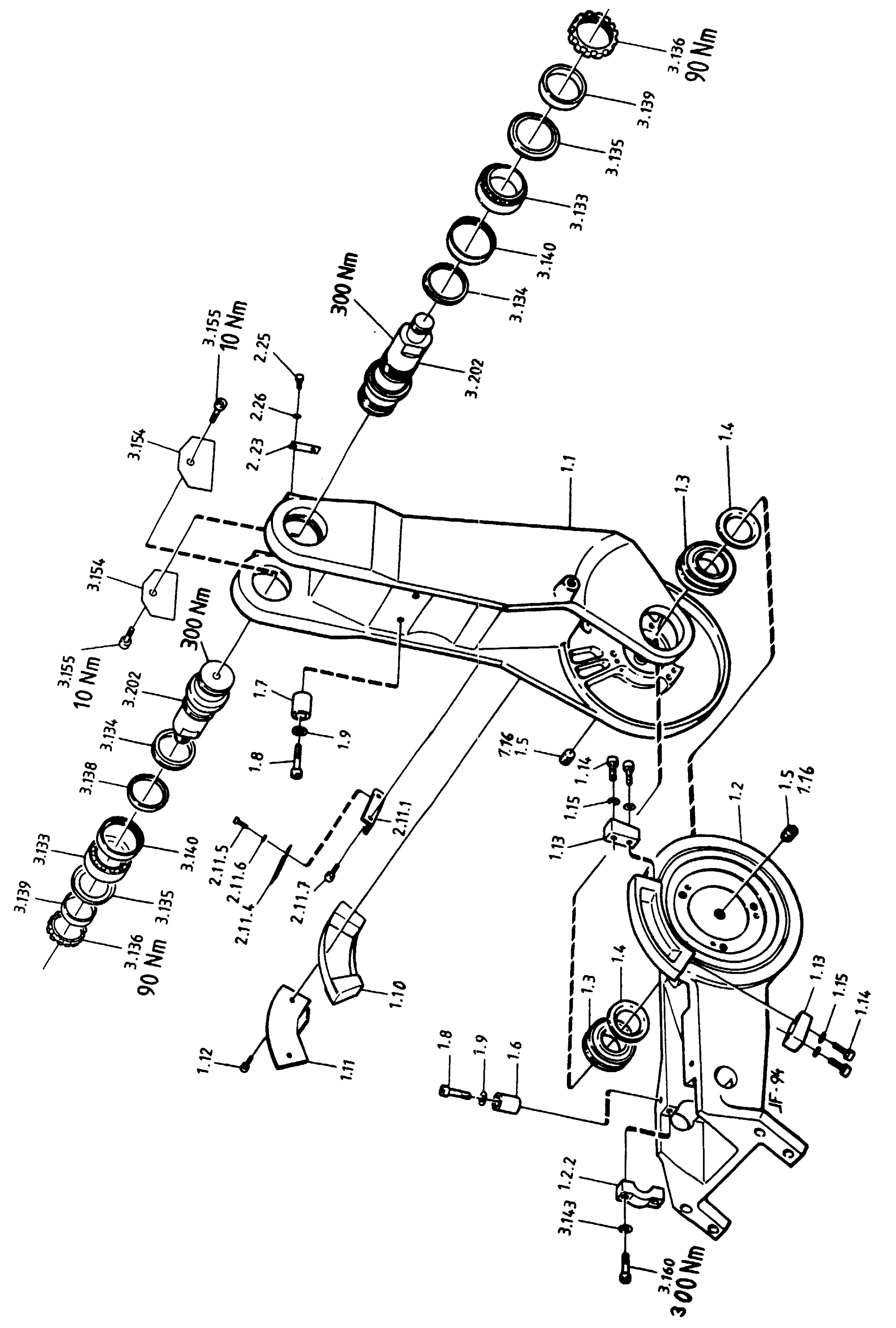

FOLDOUT 5:1

1.34	1	Friction ring	3HAA 1001-613	
2.4-120, 2.4-150, 2.8-120 and 3.0-75				
1.211		Sync.plate axes 2, mtrl set	3HAA 0001-SU	
1.211.1	1	Bracket for sync.plate	3HAA 1001-104	
1.211.4	1	Sync.plate axis 2	3HAA 1001-74	
1.211.5	2	Screw	212 2416-285	M4x6
1.211.6	2	Plain washer	2151 2062-136	4.3x9x0.8
1.211.7	2	Screw	2121 2416-366	M6x12
S /2.9-120				
1.211		Sync.plate axes 2, mtrl set	3HAA 0001-SV	
1.211.1	1	Bracket for sync.plate	3HAA 1001-346	
1.211.4	1	Sync.plate axis 2	3HAA 1001-74	
1.211.5	2	Screw	212 2416-285	M4x6
1.211.6	2	Plain washer	2151 2062-136	4.3x9x0.8
1.211.7	2	Screw	2121 2416-366	M6x12
2.23	1	Sync.plate with nonie	3HAA 1001-79	
2.25	2	Screw	2121 2416-285	M4x6
2.26	2	Washer	2151 2062-136	4.3x9x0.8
3.133	2	Bearing	2213 3802-8	32073 X
3.134	2	V-ring	2216 264-16	
3.135	2	NILOS ring	2216 0085-5	
3.136	2	Lock nut	2216 2851-112	M60x2
3.137	2	Set screw	2122 2719-491	M10x20 See foldout 5:2
3.138	1	Spacer	3HAA 1001-125	
3.139	2	Spacer	3HAA 1001-126	
3.140	2	Sealing ring	3HAA 1001-173	6.4x15x3
3.154	2	Protective plate		
3.155	2	Screw	2121 2763-364	M6x10
3.202	2	Shaft	3HAA 1001-127	
	2	Shaft	3HAA 1001-317	S /2.9-120
4		Upper cable		See foldout 5:1

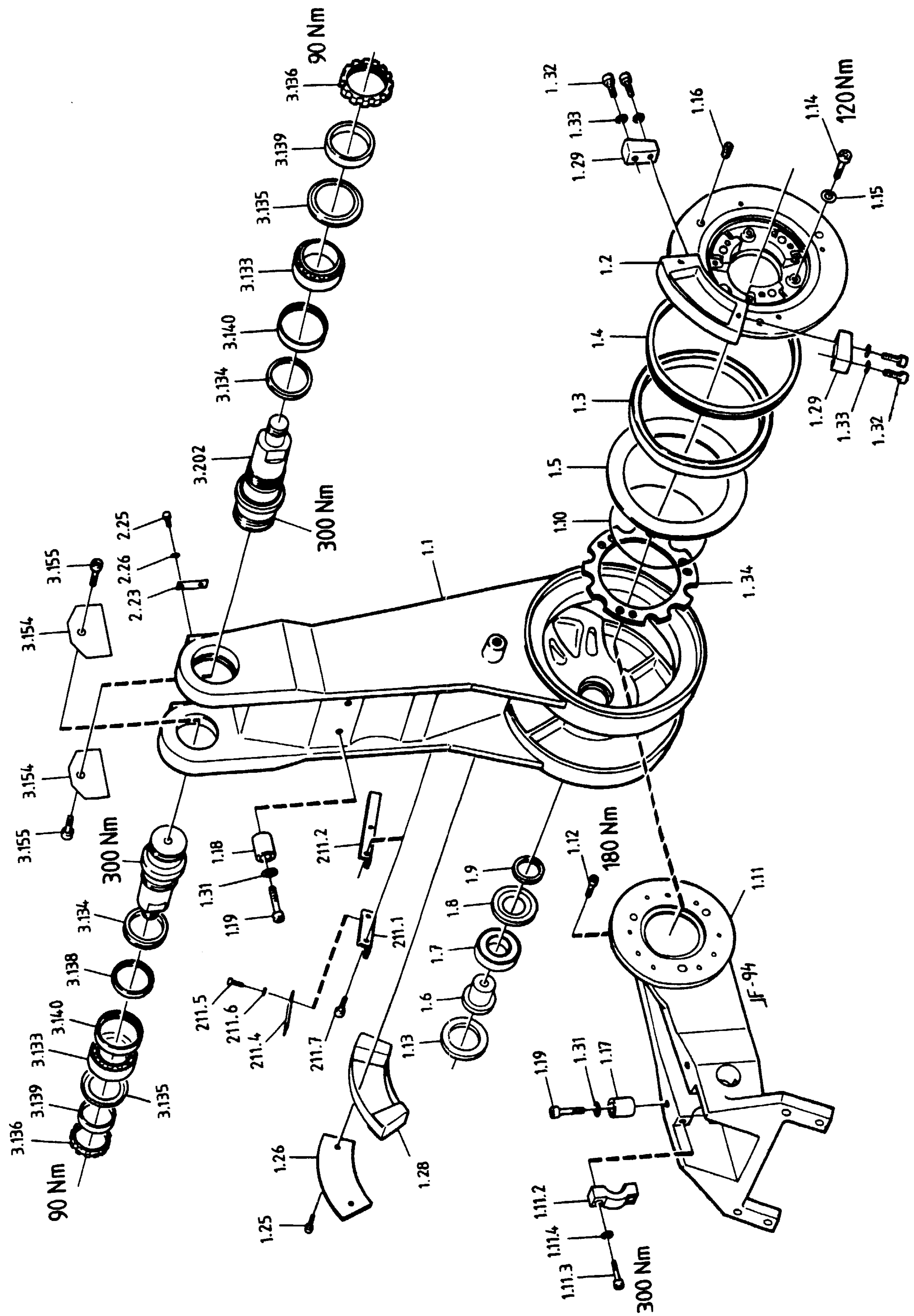

1.14 Balancing system

Itm	Qty	Name	Art. no	Rem
1		Robot complete	3HAB 4153-1	
2		Mtrl set robot complete	3HAB 4163-1	
1.51	2	Balancing unit, complete	3HAB 4216-1	**Type A**
1.51.1	2	Balancing unit	3HAB 4175-2	
1.51	2	Balancing unit, complete	3HAB 4217-1	**Type B Add load on upper arm**
1.51.1	2	Balancing unit	3HAB 4175-3	
1.51.2	2	Spacer	3HAB 4191-1	
1.51.1.5	2	Circlip	3HAB 4190-1	SB47
1.51.1.6	2	Radial bearing	3HAA 1001-207	GE 30 TE-2RS
2.102	4	Lock nut	2126 2851-106	M30x1.5
1.53	2	Balancing unit, complete	3HAB 4218-1	**Type C S /2.9-120**
1.53.1	2	Balancing unit	3HAA 0001-US	
1.53.2	2	Ring	3HAB 4544-1	
1.53.3	2	Washer	3HAB 4546-1	
1.53.4	4	Sliding ring	3HAB 4545-1	
1.53.1.13	2	Radial bearing	3HAA 1001-207	GE 30 TE-2RS
2.142	4	Screw	3HAB 3409-86	M16x60 12.9
2.143	4	Washer	3HAA 1001-186	17x27x3
S /2.9-120				
2.203		Adapter for balancing weight	3HAA 0001-ST	
2.203.1	1	Adapter for balancing weight	3HAA 1001-334	
2.203.2	4	Screw	2121 2518-632	M16x60
2.203.3	4	Washer	2151 2062-185	17x30x3
2.4-120				
2.204	1	Balancing weight	3HAB 4022-1	314 kg
2.4-150, 2.8-120, 3.0-75 and S /2.9-120				
2.204	1	Balancing weight	3HAB 4036-1	400 kg

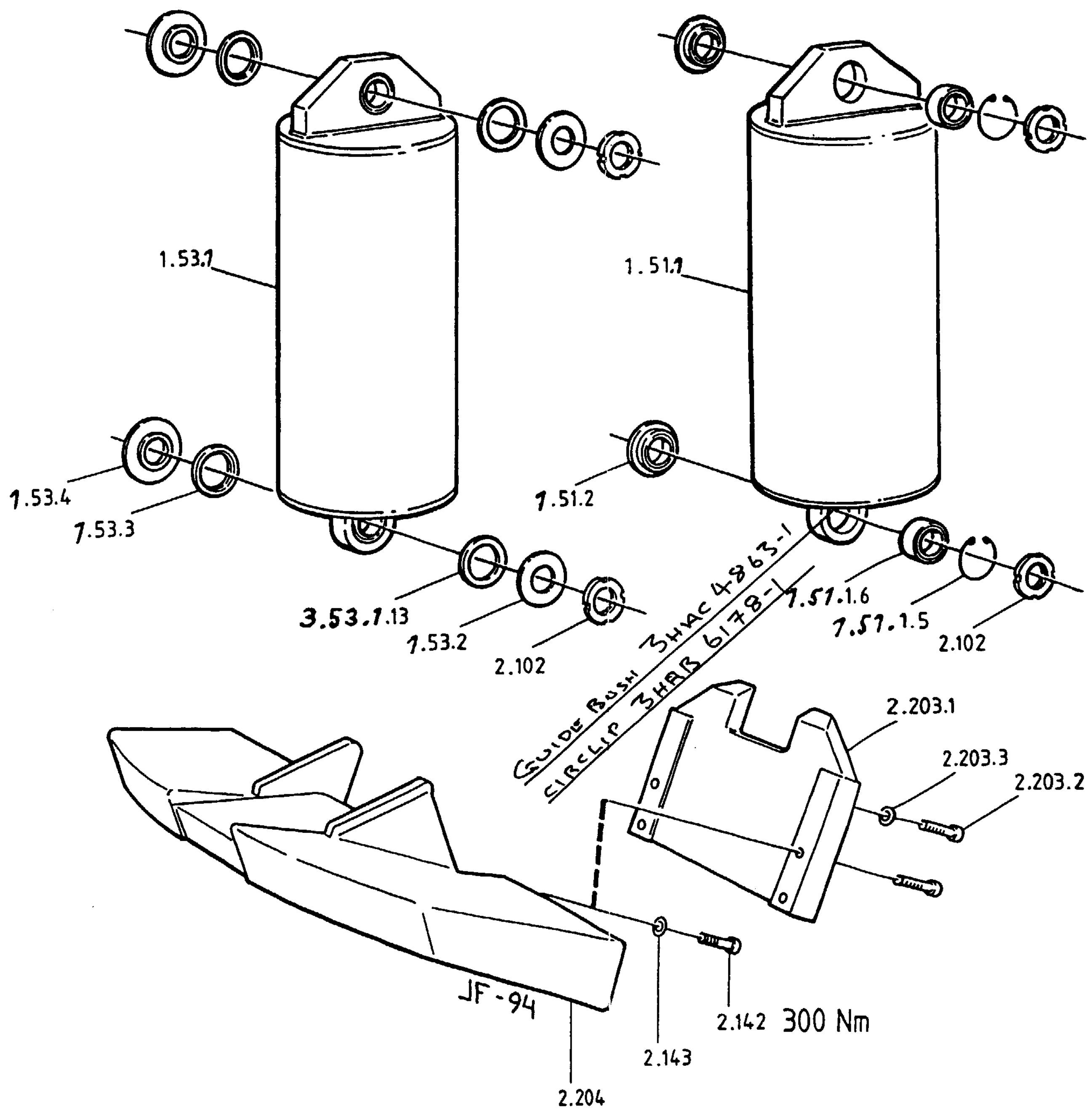

1.15 Upper arm

Itm	Qty	Name	Art. no	Rem
2.4-120				
		Upper arm complete	3HAB 4194-1	Elmo
			3HAB 4591-1	Siemens
2.4-150				
		Upper arm complete	3HAB 4194-2	Elmo
			3HAA 0001-AAE	Siemens
2.8-120				
		Upper arm complete	3HAB 4194-3	Elmo
			3HAB 4592-1	Siemens
S /2.9-120				
		Upper arm complete	3HAB 4194-3	
3.0-75				
		Upper arm complete	3HAB 4194-4	Elmo
			3HAB 4593-1	Siemens
PE /2.25-75				
		Upper arm complete		
1	1	Cable upper compl.	3HAB 4165-2	
	1	Cable upper compl.	3HAB 4165-3	With customer connections
	1	Cable upper compl.	3HAB 4165-1	S /2.9-120
	1	Cable upper compl.	3HAB 4483-2	PE /2.25-75
2	1	Axis 4 mtrlset	3HAB 4237-1	
	1	Axis 4 mtrlset		PE /2.25-75
3	1	Drive unit axis 4	3HAB 4195-1	120 kg, Elmo
	1	Drive unit axis 4	3HAB 4585-1	120 kg, Siemens
3.1	1	Motor	3HAB 4041-1	Elmo
	1	Motor	3HAB 4584-1	Siemens
3.2	1	Pinion	3HAA 1001-21	
3	1	Drive unit axis 4	3HAB 4195-2	150 kg, Elmo
	1	Drive unit axis 4	3HAA 0001-ABN	150 kg, Siemens
3.1	1	Motor	3HAB 4044-1	Elmo
	1	Motor	3HAA 0001-ZH	Siemens
3.2	1	Pinion	3HAA 1001-21	

4	1	Wrist complete	3HAB 44196-1	120 kg, Elmo
	1	Wrist complete	3HAB 4590-1	120 kg, Siemens
	1	Wrist complete	3HAB 4196-2	150 kg, Elmo
	1	Wrist complete	3HAA 0001-ABR	150 kg, Siemens
5	1	Cable axis 5		See foldout 5:1
6	1	Cable axis 6		See foldout 5:1
7	1	Extension	3HAA 1001-301	2.8-120, S/2.9-120
	1	Extension	3HAA 1001-304	3.0-75
8	1	Cover	3HAA 1001-302	2.8-120, S/2.9-120
	1	Cover	3HAA 1001-305	3.0-75
9	8	Screw	3HAB 3409-69	M12x50 12.9
10	6	Screw	2121 2411-368	M6x12
11	8	Washer	3HAA 1001-134	
12	1	Roll pin	2111 2835-416	10x30 FRP
31	1	Axis 4	3HAB 4236-1	See foldout 5:2
32	19	Screw	2121 2411-368	M6x16
33	8	Screw	3HAB 3409-69	M12x50 12.9
34	8	Washer	3HAA 1001-134	
35	1	Cover	3HAA 1001-500	
36	1	Gasket	3HAA 1001-166	
37	1	Bracket	3HAA 1001-684	
38	1	Cable holder	3HAA 1001-636	
40	1	Cover	3HAA 1001-501	
41	14	Screw	2121 2411-291	M4x12
43	2	Screw	2121 2411-374	M6x30
45	3	Clip lock	5217 520-11	
46	2	Straps, outdoor	2166 2055-3	L=186 mm, TY-25 MX
47	2	Mounting base, outdoor	2166 2058-2	17.0x11.1
48	1	Roll pin	2111 2835-416	10x30 FRP
49	1	Contact holder	3HAA 1001-201	
50	1	Contact holder	3HAA 1001-202	
55	1	Strap, outdoor	2166 2055-4	L=290 mm
56	1	Sealing compound	1236 0012-227	Hylomar
57	1	Straps	2166 2055-1	
58	1	Sealing washer	2152 2032-1	4.5x7
102	1	Cover	3HAA 1001-161	
103	1	Cover	3HAA 1001-719	
104	2	Screw	2121 2411-366	M6x12

Spare Parts

106	1	Cover	3HAA 1001-176	
107	3	Screw	2121 2411-368	M6x16
108	3	Washer	2151 2062-153	6.4x12x1.6
202	1	Nippel	2529 256-1	
203	1	Cover	3HAA 1001-176	
204	3	Screw	2121 2411-368	M6x16
205	3	Washer	2151 2062-153	6.4x12x1.6
206	1	Cover	3HAA 0001-ZB	
207	2	Screw	2121 2411-366	M6x12
208	1	Protective hood	2522 2101-15	17.2x20
209	1	Sealant	1269 0014-412	Loctite 542
210	2	Screw	2121 2411-372	M6x25

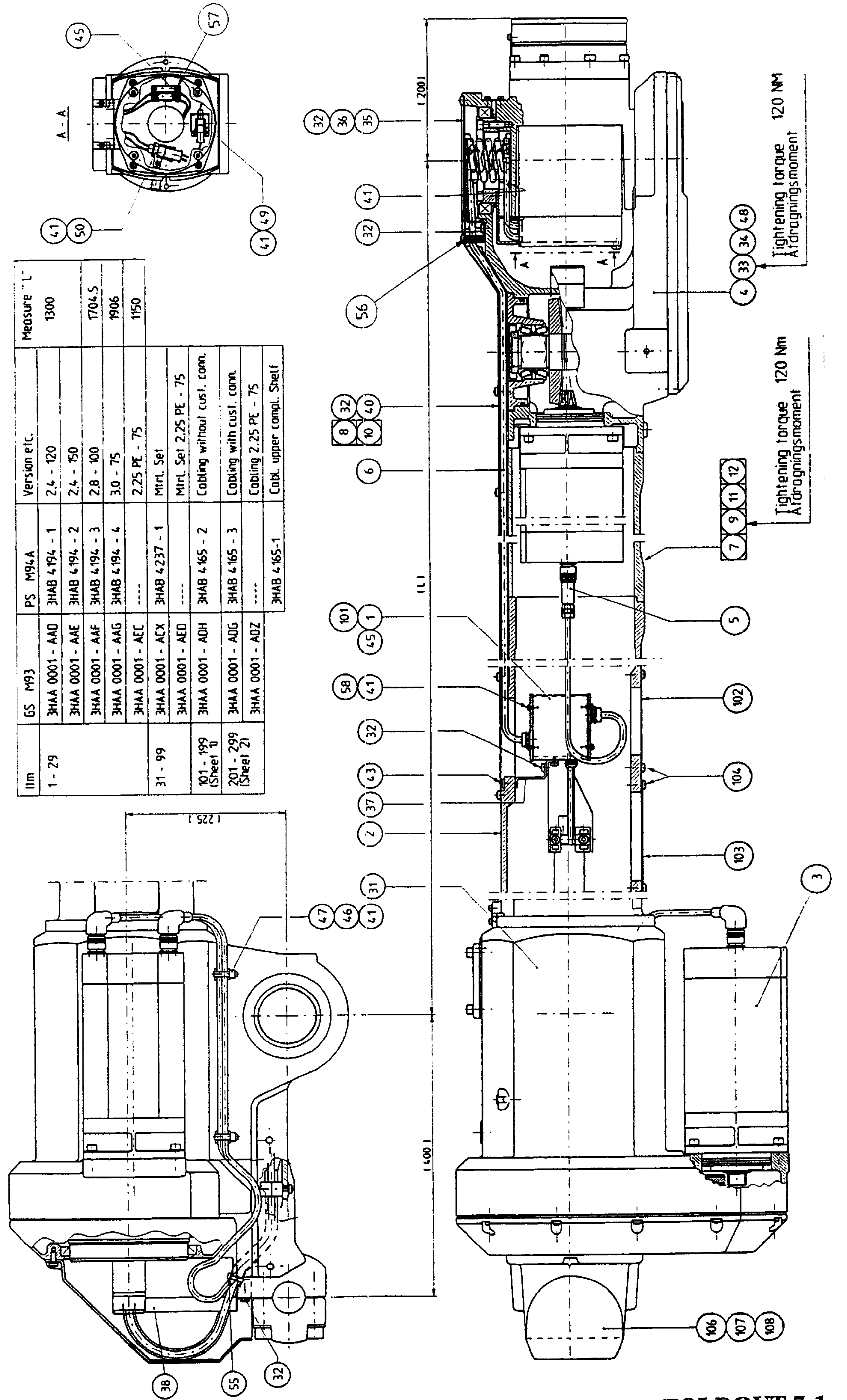

Ilm	GS M93	PS M94A	Version etc.	Measure "L"
1 - 29	3HAA 0001 - AAD	3HAB 4194 - 1	2.4 - 120	1300
	3HAA 0001 - AAE	3HAB 4194 - 2	2.4 - 150	
	3HAA 0001 - AAF	3HAB 4194 - 3	2.8 - 100	1704.5
	3HAA 0001 - AAG	3HAB 4194 - 4	3.0 - 75	1906
	3HAA 0001 - AEC	----	2.25 PE - 75	1150
31 - 99	3HAA 0001 - ACX	3HAB 4237 - 1	Mtrl. Set	
	3HAA 0001 - AED	----	Mtrl. Set 2.25 PE - 75	
101 - 199 (Sheet 1)	3HAA 0001 - ADH	3HAB 4165 - 2	Cabling without cust. conn.	
201 - 299 (Sheet 2)	3HAA 0001 - ADG	3HAB 4165 - 3	Cabling with cust. conn.	
	3HAA 0001 - ADZ	----	Cabling 2.25 PE - 75	
		3HAB 4165-1	Cabl. upper compl. Shelf	

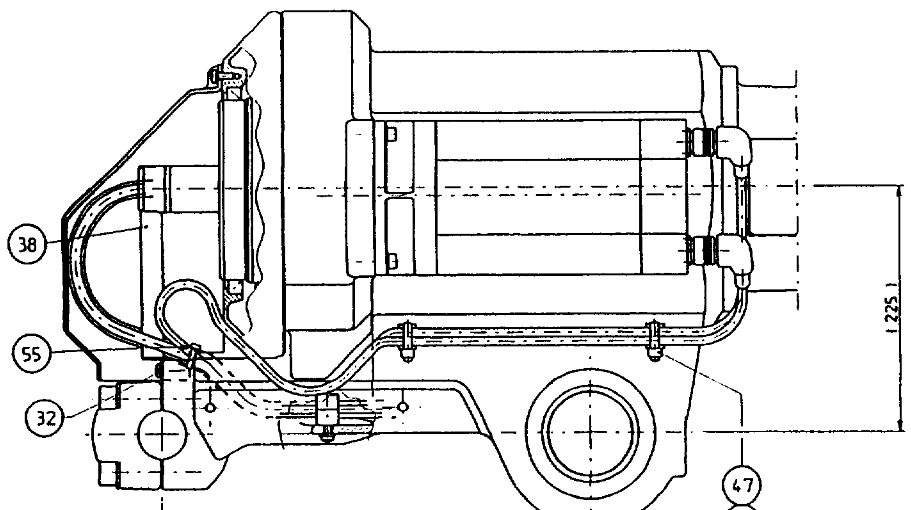

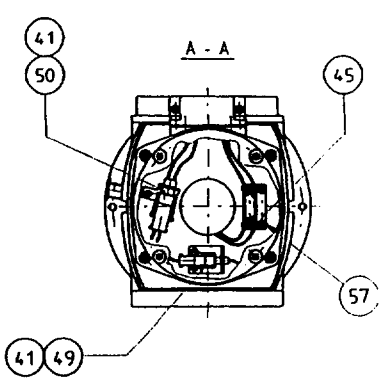

Itm	GS M93	PS M94A	Version etc.	Measure "L"
1 - 29	3HAA 0001 - AAD	3HAB 4194 - 1	2.4 - 120	1300
	3HAA 0001 - AAE	3HAB 4194 - 2	2.4 - 150	
	3HAA 0001 - AAF	3HAB 4194 - 3	2.8 - 100	1704,5
	3HAA 0001 - AAG	3HAB 4194 - 4	3.0 - 75	1906
	3HAA 0001 - AEC	----	2.25 PE - 75	1150
31 - 99	3HAA 0001 - ACX	3HAB 4237 - 1	Mtrl. Set	
	3HAA 0001 - AED	----	Mtrl. Set 2.25 PE - 75	
101 - 199 (Sheet 1)	3HAA 0001 - ADH	3HAB 4165 - 2	Cabling without cust. conn.	
201 - 299 (Sheet 2)	3HAA 0001 - ADG	3HAB 4165 - 3	Cabling with cust. conn.	
	3HAA 0001 - ADZ	----	Cabling 2.25 PE - 75	
		3HAB 4165-1	Cabl. upper compl. Shelf	

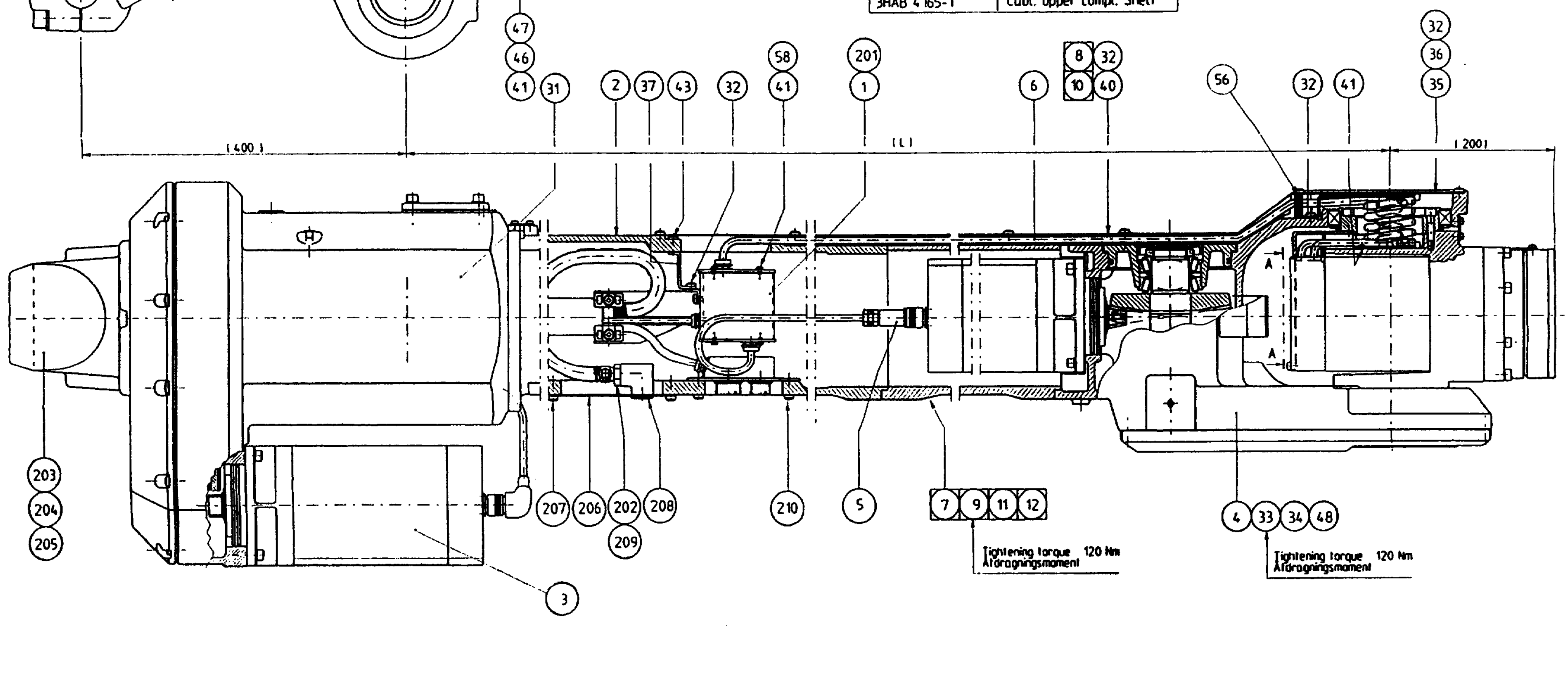

Spare Parts

31.35	6	Screw	2121 2411-287	M4x6
31.36	6	Washer	2151 2062-136	4.3x9x0.8
31.38	1	Protective plug	2522 726-4	
31.43	6	Spring washer	2154 2033-9	8.4

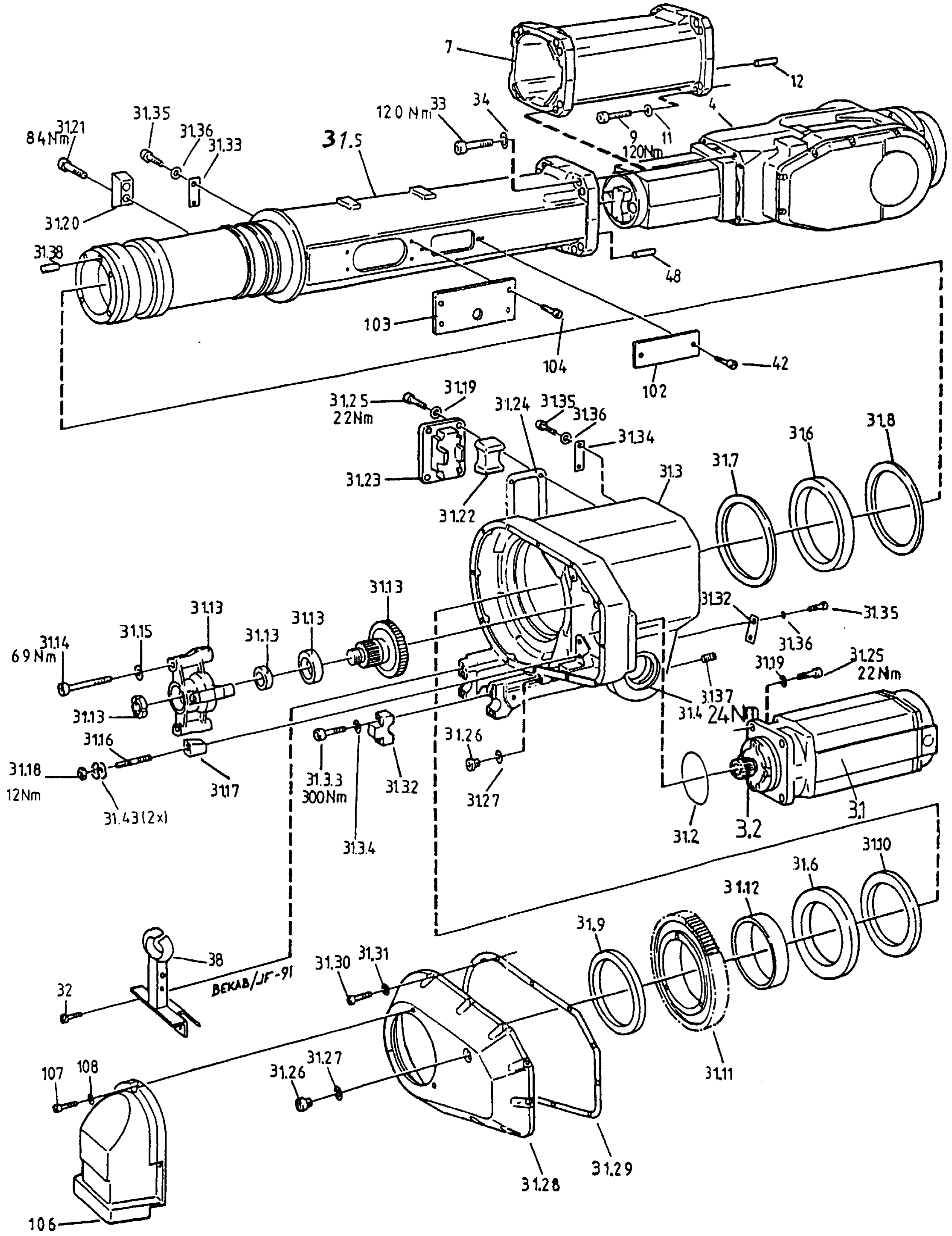

1.17 Parallel rod

Itm	Qty	Name	Art. no	Rem
		Parallel rod	3HAA 0001-ER	
1	1	Parallel rod	3HAA 1001-71	
2	2	Shaft	3HAA 1001-88	
3	4	Ring	3HAA 1001-86	
	4	Ring	3HAB 4465-1	**Foundry**
4	2	Spherical bearing	3HAA 1001-189	22210 EK
5	2	Adapter sleeve	2213 1905-21	H310
6	2	Retaining ring	2154 2527-160	SGH 90

Both ends identical

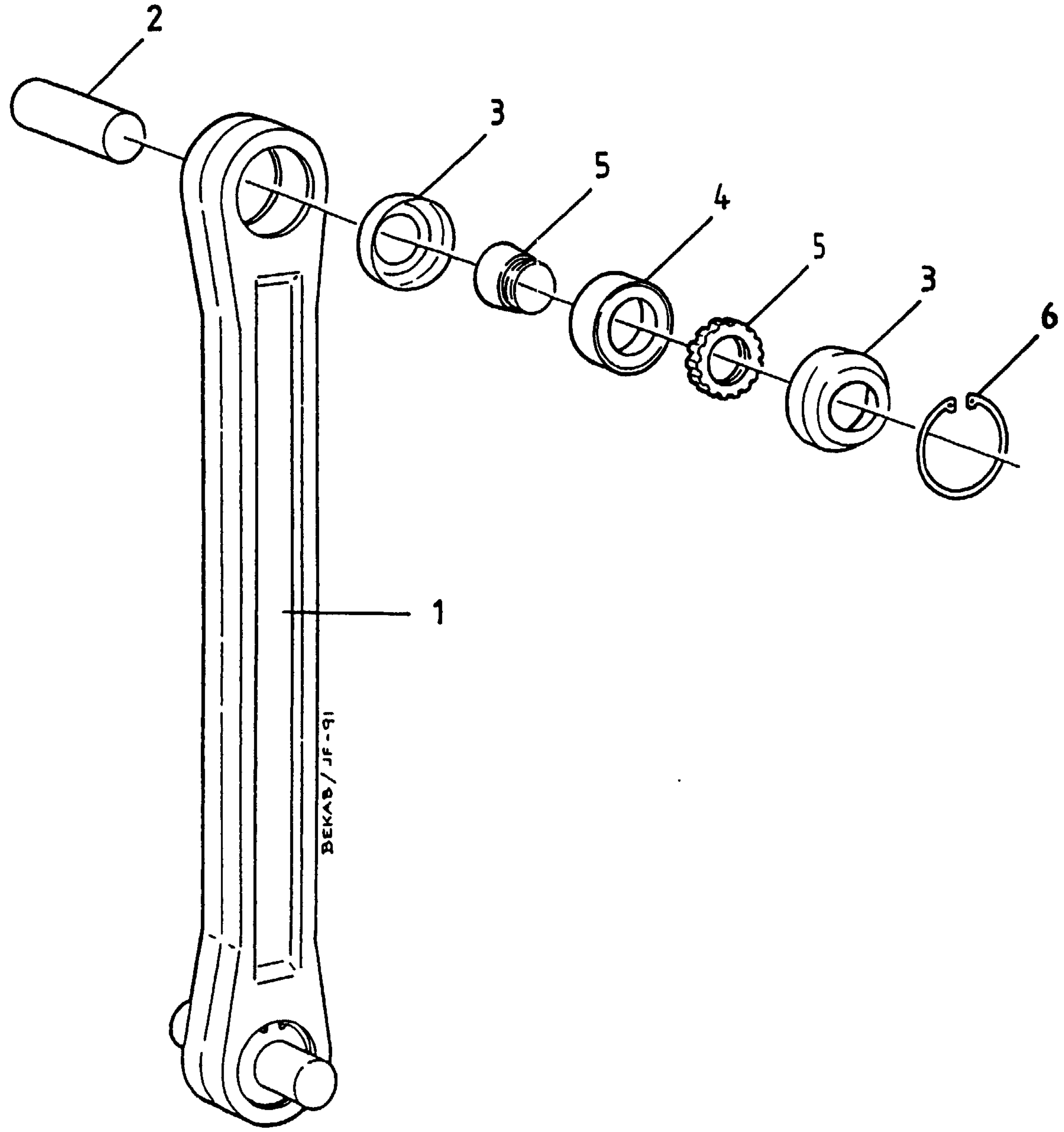

1.18 Wrist complete

Itm	Qty	Name	Art. no	Rem
120 kg				
		Wrist unit	3HAB 4196-1	Elmo
			3HAB 4590-1	Siemens
			3HAB 4506-1	Foundry
150 kg				
		Wrist unit	3HAB 4196-2	Elmo
			3HAA 0001-ABR	Siemens
			3HAB 4506-2	Foundry
120 kg				
1	1	Drive unit axis 5	3HAB 4171-1	Elmo
	1	Drive unit axis 5	3HAB 4586-1	Siemens
1.1		Motor	3HAB 4041-1	Elmo
		Motor	3HAB 4584-1	Siemens
1.2		Pinion	3HAA 1001-58	Part of item 3
150 kg				
1	1	Drive unit axis 5	3HAB 4171-2	Elmo
	1	Drive unit axis 5	3HAA 0001-ABT	Siemens
1.1		Motor	3HAB 4044-1	Elmo
		Motor	3HAA 0001-ZH	Siemens
1.2		Pinion	3HAA 1001-58	Part of item 3
2	1	Drive unit axis 6	3HAB 4172-1	Elmo
	1	Drive unit axis 6	3HAA 0001-ABU	Siemens
3	1	Gear set unit axis 5	3HAA 0001-AG	
4	1	Intermediate wheel unit	3HAA 0001-GY	
5	1	Gear unit axis 5	3HAA 0001-HA	
6	1	Wrist housing	3HAA 1001-35	
7	1	Set of shims	3HAA 0001-AE	
8	1	Set of shims	3HAA 0001-AF	
9	1	Bearing support	3HAA 1001-271	
10	1	Roller bearing	3HAA 1001-131	NU205ECP
11	1	Radial ball bearing	3HAA 1001-132	120x150x16
12	1	Shaft	3HAA 1001-107	
13	1	Spacer	3HAA 1001-108	
14	1	Sealing	3HAB 4409-1	110x140x12

15	12	Collar screw	3HAB 3409-57	M10x60 12.9
16	1	End lid	2158 0399-4	
17	8	Washer	3HAA 1001-106	6.4x15x3
18	1	Screw	3HAA 1001-266	M16x60
19	1	Washer	3HAA 1001-267	16.5x25x4
20	4	Stud	2122 2011-465	M8x70
21	4	Wedge	3HAA 1001-99	
22	4	Nut	2126 2011-117	M8
23	2	Damper axis 5	3HAA 1001-101	
24	1	O-ring	2152 2012-430	89.5x3.0
25	1	Magnetic plug	2522 122-1	R 1/4"
26	1	Washer	2152 0441-1	13.5x18x1.5
27	1	Cover axis 5	3HAA 1001-276	
28	1	Gasket	3HAA 1001-112	
29	1	Sync.plate with nonie	3HAA 1001-79	
30	2	Screw	2121 2411-287	M4x8
31	21	Six point socket screw	2121 2411-370	M6x20
32	4	Screw	2121 2519-453	M8x25
33	10	Screw	2121 2519-455	M8x30
34	4	Screw	3HAB 3409-50	M10x25 12.9
35	2	Plain washer	2151 2062-136	4.3x9x0.8
36	11	Spring washer	2154 2022-4	6.4 FZB
37	1	Gear oil	1171 2016-604	5 l
38	4	Plain washer	2151 2062-165	8.4x16x1.6
39	1	Locking liquid	1269 0014-410	Loctite 242
40	1	Locking liquid	1269 0014-407	Loctite 601
42	2	Friction washer	3HAA 1001-297	
43	8	Spring washer	2154 2033-9	
44	2	Plain washer	2151 2062-153	6.4x12x1.6
45	4	Plain washer	3HAB 4233-1	11x17x2

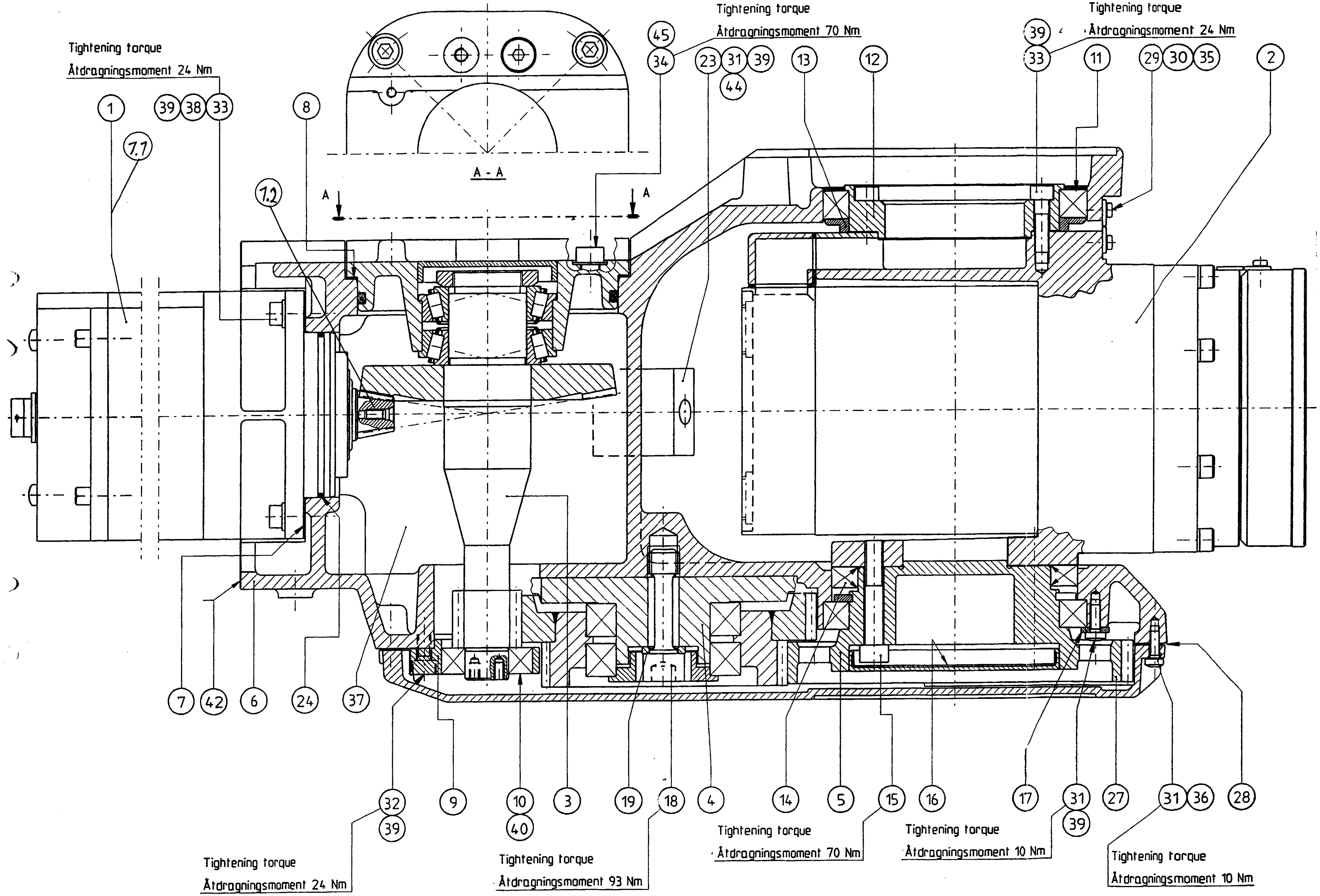
Tightening torque
Åtdragningsmoment 24 Nm
1
7.1
39 38 33
8
7.2
A - A
A
A
Tightening torque
Åtdragningsmoment 70 Nm
45
34
23 31 39
44
13
12
Tightening torque
Åtdragningsmoment 24 Nm
39
33
11
29 30 35
2
7
42
6
24
37
32
39
9
10
40
3
19
18
4
14
5
15
16
17
31
39
27
31 36
28
Tightening torque
Åtdragningsmoment 24 Nm
Tightening torque
Åtdragningsmoment 93 Nm
Tightening torque
Åtdragningsmoment 70 Nm
Tightening torque
Åtdragningsmoment 10 Nm
Tightening torque
Åtdragningsmoment 10 Nm

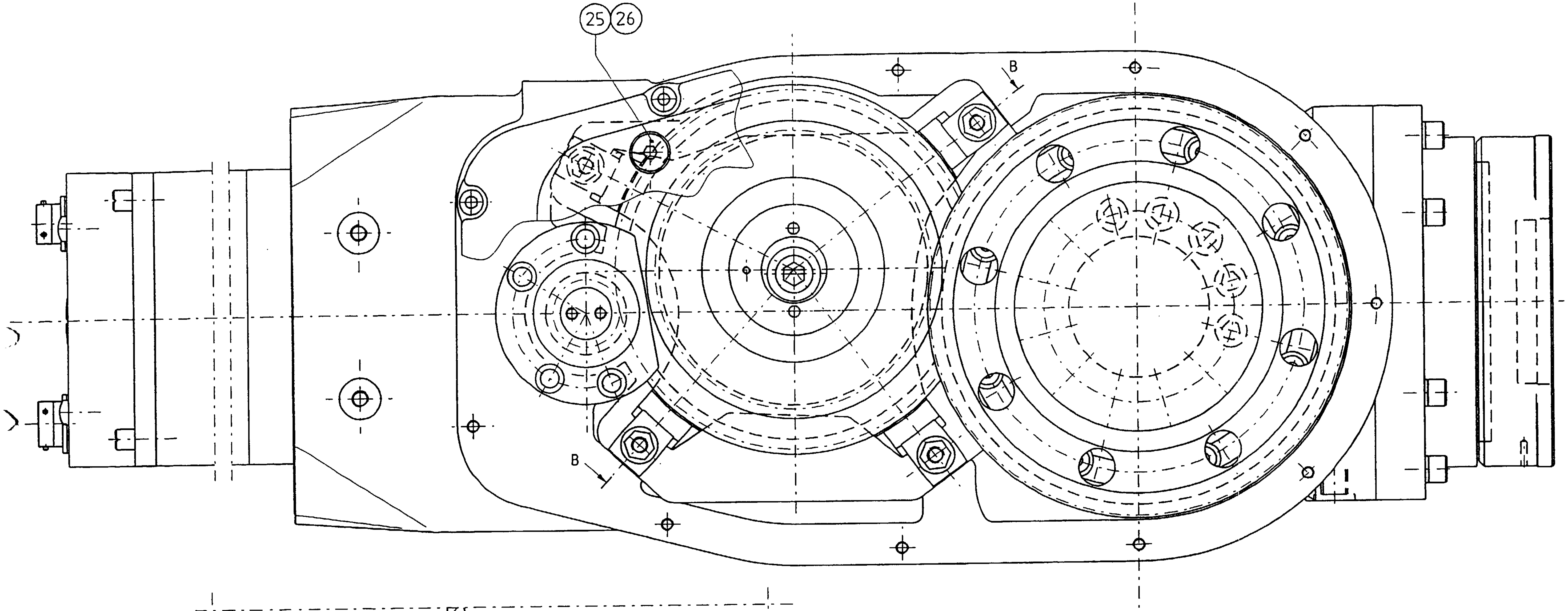
25
26
B
B

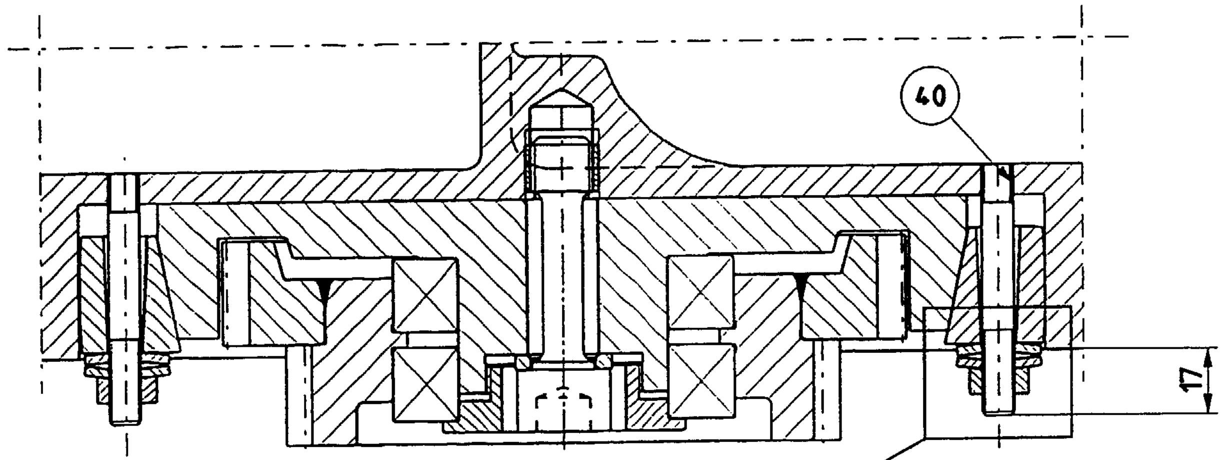
40
17

B - B

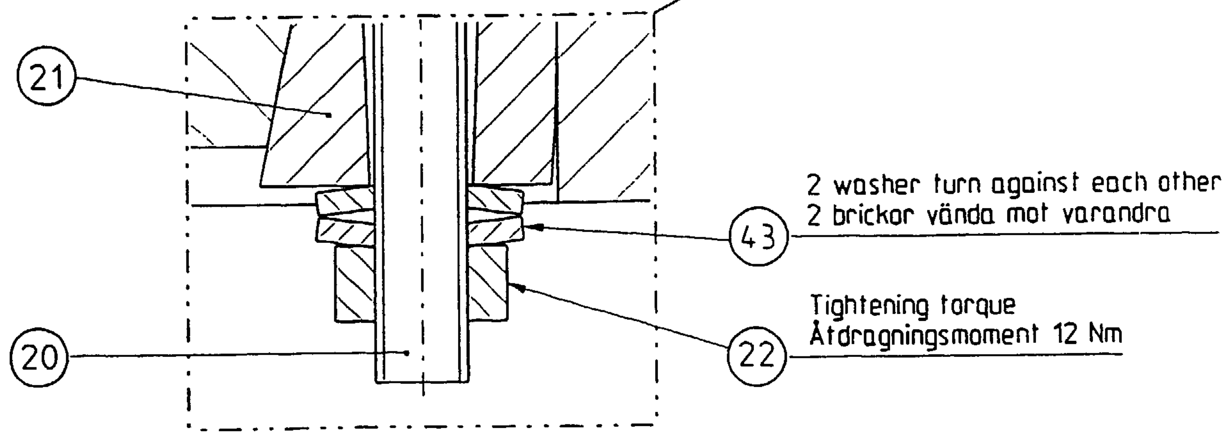
21
2 washer turn against each other
2 brickor vända mot varandra
43
Tightening torque
Åtdragningsmoment 12 Nm
22
20

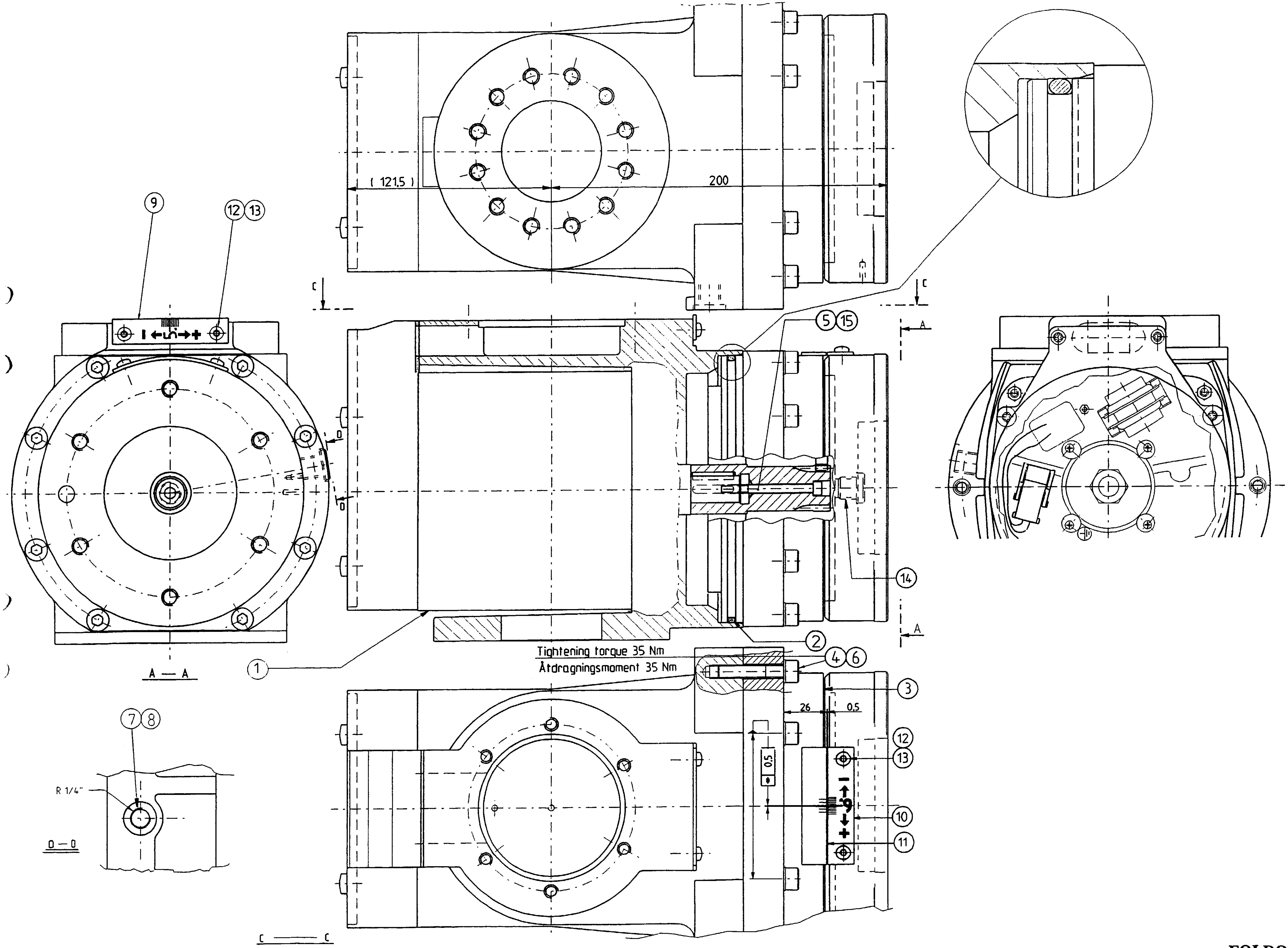

(121,5)
200
C
C
A
A
9
12 13
5 15
14
2
1
4 6
3
Tightening torque 35 Nm
Åtdragningsmoment 35 Nm
26
0,5
0,5
12
13
10
11
D
D
A — A
7 8
R 1/4"
D — D
C —— C

1.19 Drive unit axis 6

Itm	Qty	Name	Art. no	Rem
		Drive unit axis 6	3HAB 4172-1	Elmo
		Drive unit axis 6	3HAA 0001-ABU	Siemens
1	1	Motor	3HAB 4042-1	Elmo
1	1	Motor	3HAA 0001-XK	Siemens
2	1	O-ring	2152 0431-12	151.99x3.53
3*	1	Reduction gear	3HAA 0001-HJ	RV-30 AT
3.3	1	Pinion	3HAA 1001-522	
4	8	Hexagon cap screw	3HAB 3409-40	M8x40
5	1	Hexagon cap screw	2121 2519-341	M5x50 FZB
6	8	Washer	3HAA 1001-172	8.4x13x1.5
7	1	Magnetic plug	2522 122-1	R 1/4"
8	1	Washer	2152 0441-1	13.5x18x1.5
9	1	Sync.plate axis 5	3HAA 1001-77	
10	1	Sync.plate axis 6	3HAA 1001-78	
11	1	Sync. plate with nonie	3HAA 1001-174	
12	4	Six point socket screw	2121 2411-287	M4x8
13	4	Plain washer	2151 2062-136	4.3x9x0.8
14	1	Grease	3HAA 1001-294	
15	1	Locking liquide	1290 014-410	

* when exchanging the recuction gear a new pos 11 must be mounted

1.20 Cooling device axis 1

Itm	Qty	Name	Art. no	Rem
	1	Cooling axis 1	3HAA 0001-AAB	
1	1	Fan	3HAA 0001-UL	
2	4	Screw	2121 2416-366	M6x12
3	1	Gasket	3HAA 1001-607	
4	1	Holder	3HAA 1001-606	
5	2	Gasket	3HAA 1001-608	
6	1	Flange	3HAA 1001-605	
7	4	Nut	2126 2011-116	
8	1	Cover	3HAA 1001-604	
9	1	Screw	2121 2416-378	M6x40
10	1	Holder	3HAA 1001-603	
11	1	Cover	3HAA 0001-VH	
12	1	Fan cabling	3HAA 0001-ACE	
13	1	Cable gland	3HAA 1001-243	
14	1	Nut	2126 0023-2	Pr 18.6
15	2	Clamp	2166 2018-1	
16	1	Filter	3HAA 1001-612	

For parts in controller, see 2.7 Optinal units.

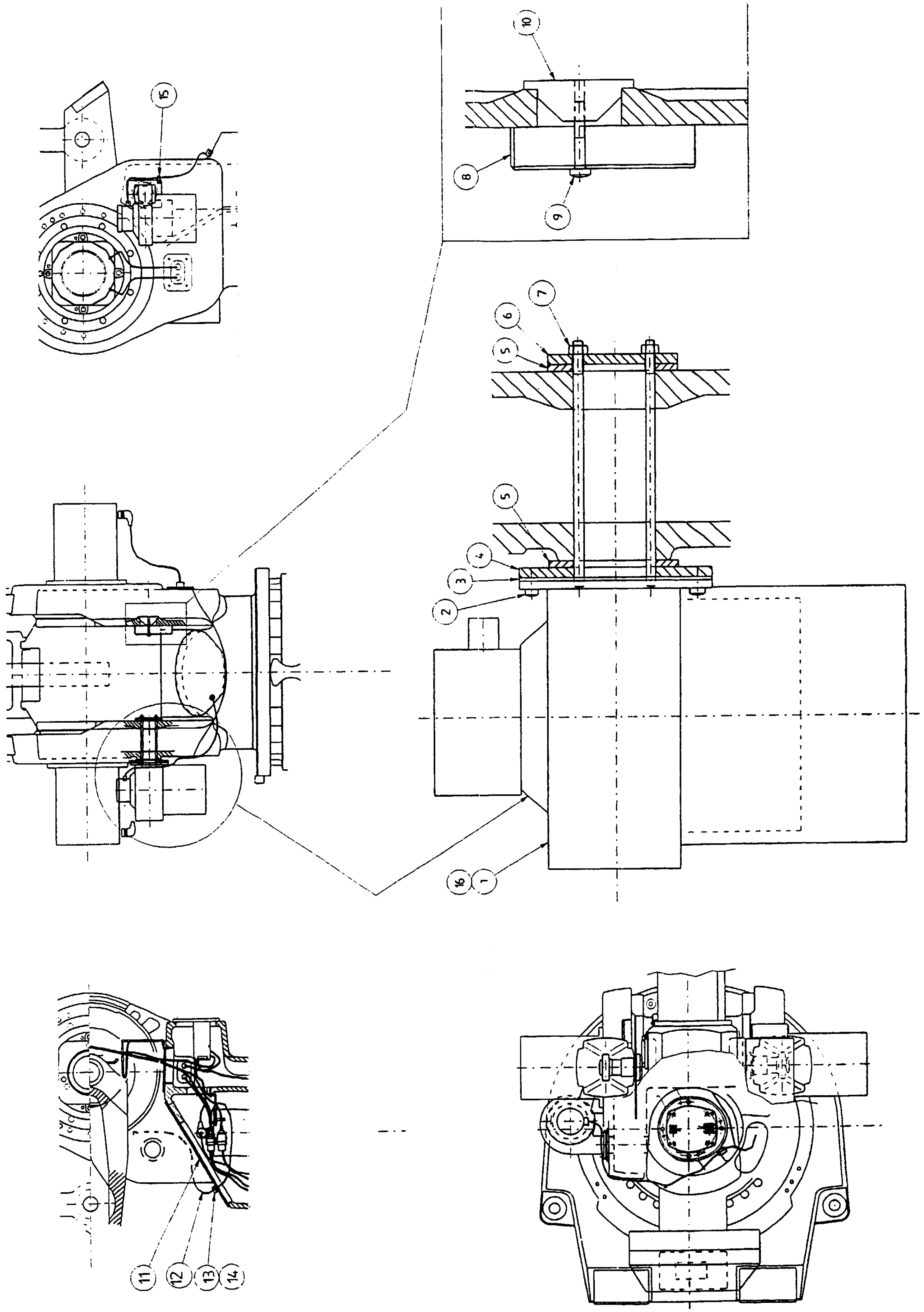

1.21 Cables

Itm	Qty	Name	Art. no	Rem
1	1	Cable upper arm	3HAB 4253-1	No customer connections Foldout 5:1
1	1	Cable upper arm	3HAB 4254-1	With customer connections Foldout 5:1
1	1	Cable upper arm	3HAB 4198-1	S /2.9-120 Foldout 5:1
1	1	Cable upper arm	3HAB 4483-1	PE /2.25-75 Foldout 5:1
2	1	Lower cable	3HAB 4248-1	No customer connections Foldout 9
2	1	Lower cable	3HAB 4249-1	With customer connections Foldout 9
3	1	Control cable axis 1	3HAB 4250-1	Foldout 9
5	1	Cable, axis 5	3HAA 0001-YR	
	1	Cable, axis 5	3HAA 0001-YS	2.8-120, 3.0-75 S /2.9-120 Foldout 5:1
6	1	Cable, axis 6	3HAA 0001-YT	
	1	Cable, axis 6	3HAA 0001-YU	2.8-120, 3.0-75 S /2.9-120 Foldout 5:1
7	1	Cable, motor axis 2	3HAB 4252-1	Foldout 9
	1	Cable, motor axis 2	3HAB 4197-1	S /2.9-120
8	1	Cable, motor axis 3	3HAA 0001-YY	Foldout 9
2.176	2	Screw	2121 2416-380	Foldout 2
2.177	2	Washer	2151 2082-150	Foldout 2

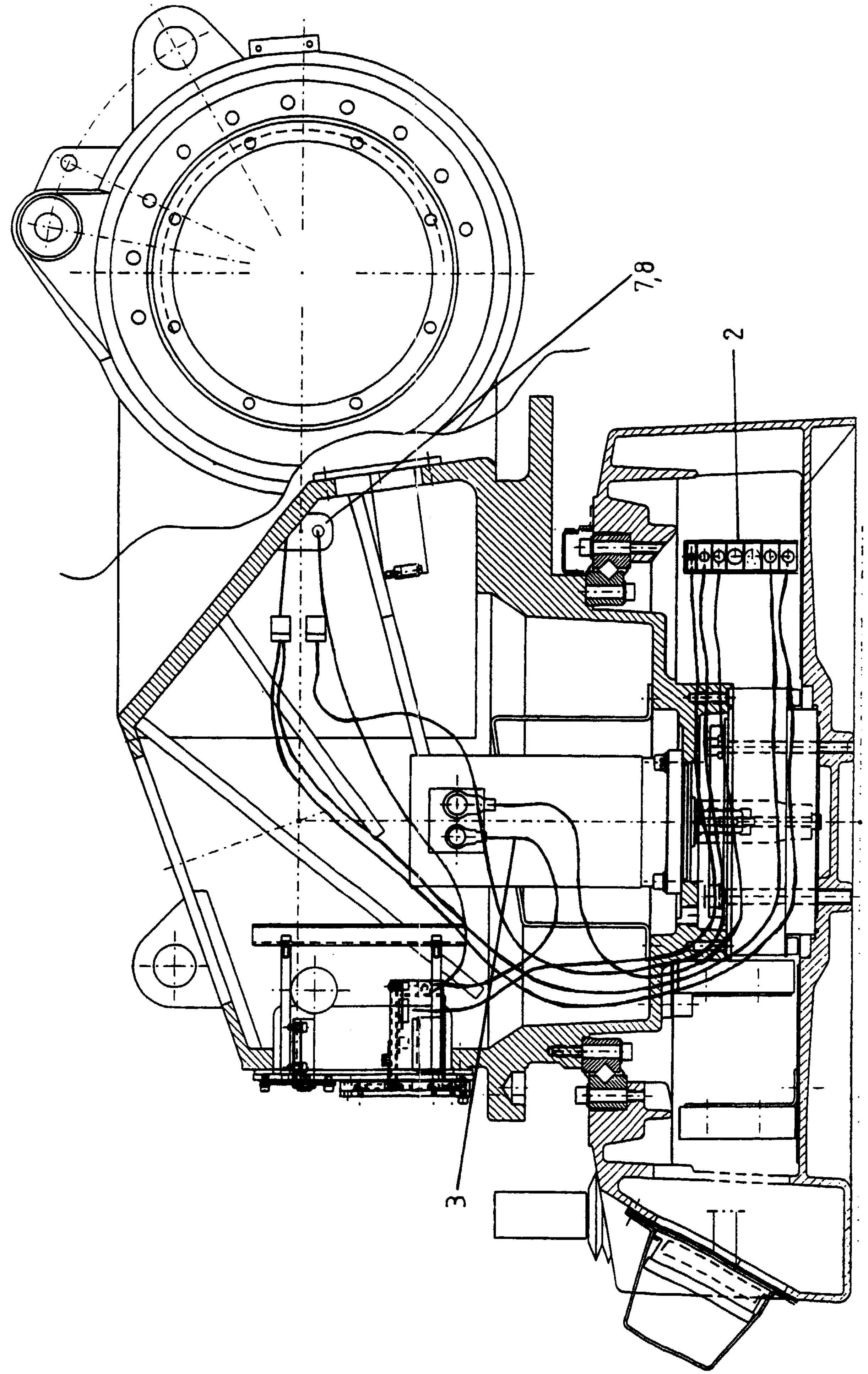

FOLDOUT 13:1

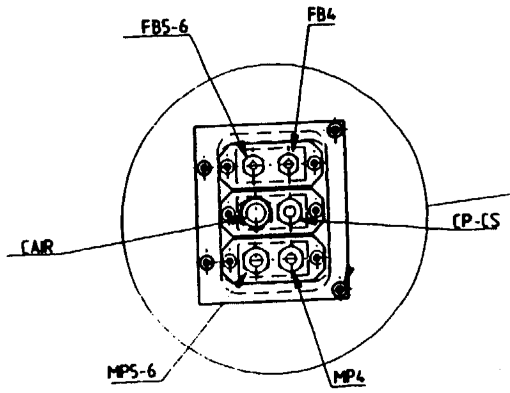

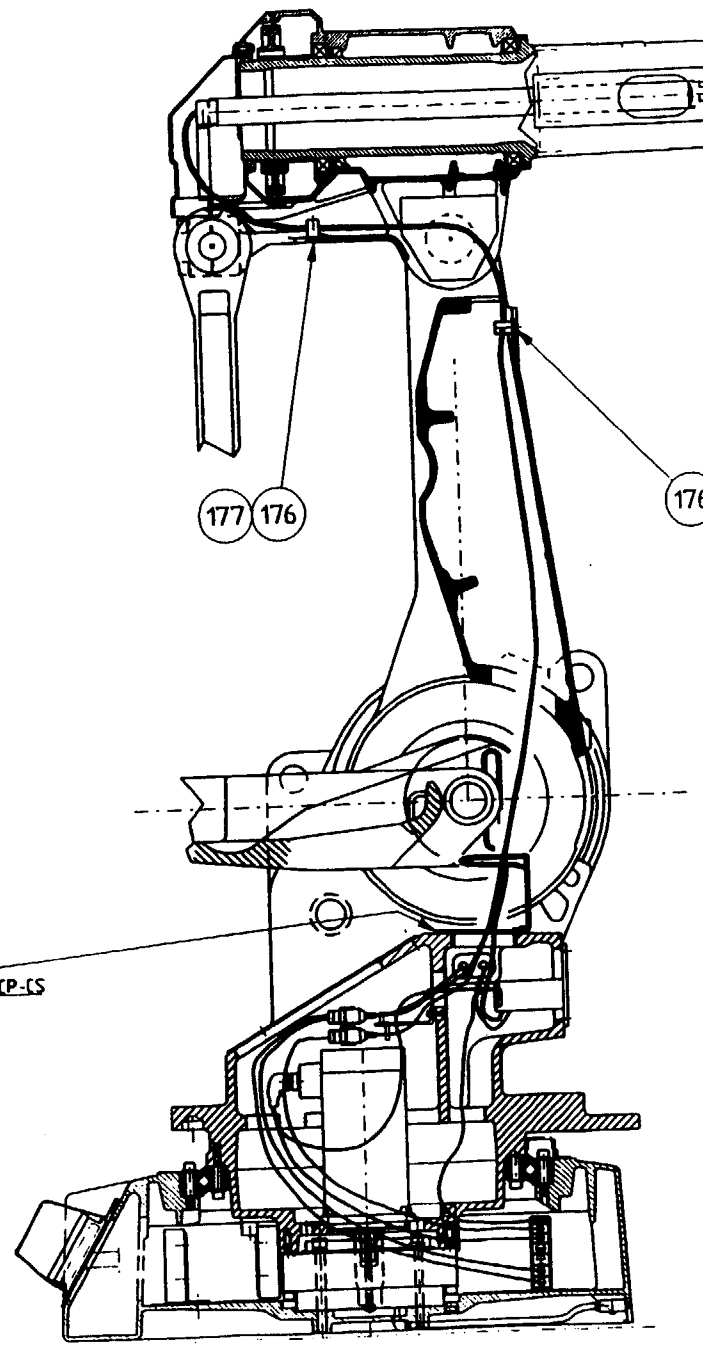

CAIR : Customer air / Kund luft   0 = 11 / 16
CP-CS : Customer power and signal / Kund kraft o. signal. Dy = 9.7
MPS-6 : Motor power ax.5-6 / Motorkraft ax.5-6 . Dy = 10.5
MP4 = Motor power ax.4 / Motorkraft ax.4 . Dy = 9.0
FBS-6 : Feed Back / Signal ax 5 och 6 . Dy = 6.2
FB4 = Feed Back ax.4 / Signal ax 4 . Dy = 6.9

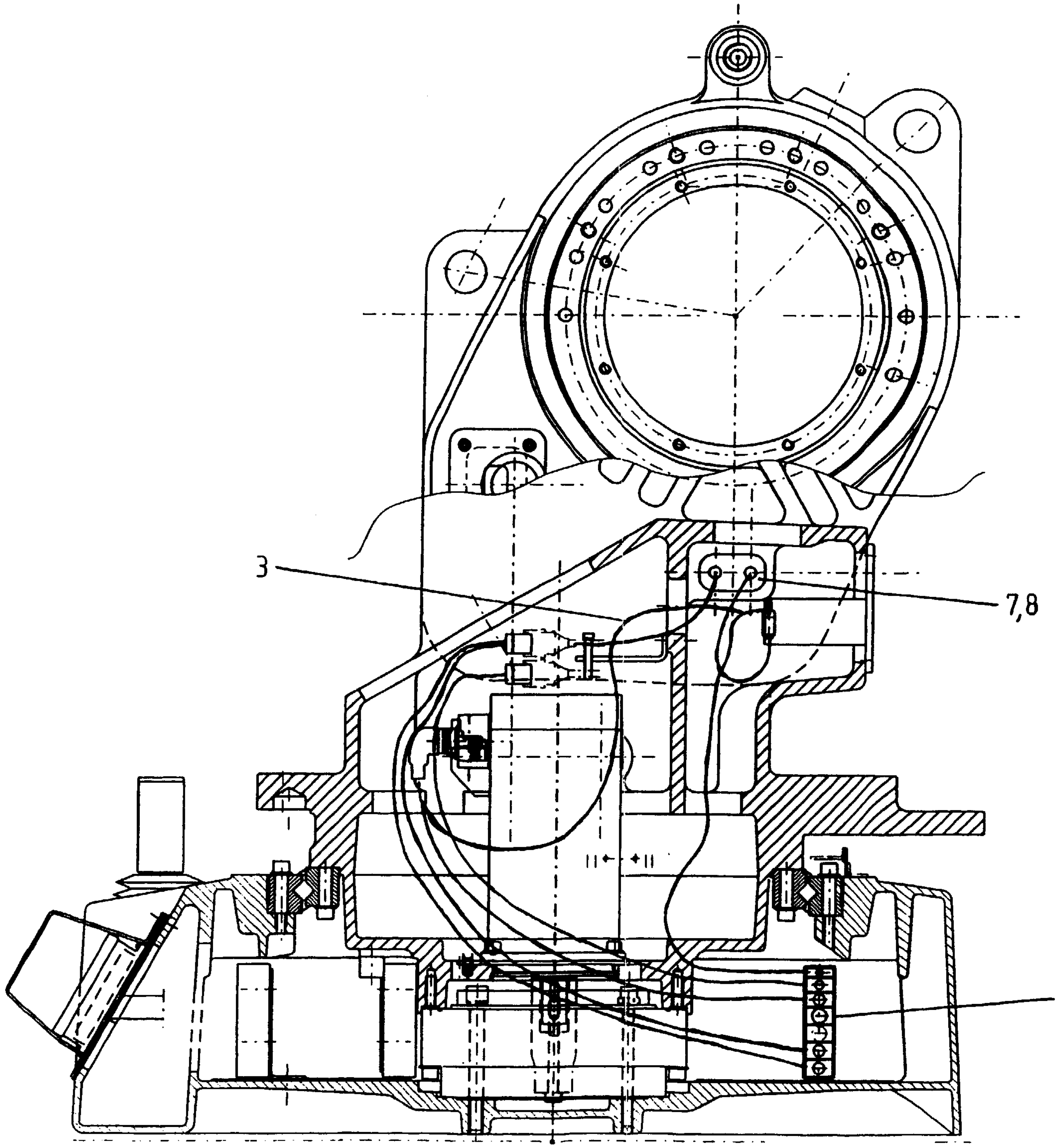

2 Control system

Item number refers to detailed circuit diagram, see chapter Circuit Diagram

2.1 Power supply side

Itm	Qty	Name	Art.no	Rem
Z1		Power supply filter	3HAB 5425-1	
QS1		Lockable circuit breaker	5324 688-3	
		Automatic fuse	3HAB 2017-2	Option 143/144
		Flange disconnector	3HAB 2703-1	400 - 475 V
			3HAB 2703-2	400 - 600 V
TM1		Transformer, with automatic fuse and 5x20 mm fuses		
			3HAB 2947-1	200-400 V
			3HAB 2945-1	400-500 V
			3HAB 2946-1	475-600 V
FS1	1	Automatic fuse	3HAB 5107-1	4-pole
	2	Fuse	5672 817-22	6,3A slow,5x20mm
	1	Fuse	5672 817-19	3.15 A

2.2 Operators panel

Itm	Qty	Name	Art.no	Rem
SA1	1	Operating mode selector	3HAA 3003-21	
SA2,3	2	Lamp push button	SK 615 202-CH	
	3	Contact block	SK 616 001-A	
	2	Lamp block	SK 616 003-A	
	2	Glow lamp	5911 069-10	36 V, 3,5 W, BA 9S
SA4	1	EM stop button	3HAB 5171-1	
	1	Contact block	3HAB 5171-10	
D1		Floppy disc unit	3HAB 2596-1	Contains the floppy disc driver
		Floppy disc driver	3HAB 2480-1	
		Cable	3HAB 2759-1	
PT		Duty time counter	3HAA 3001-7	24 V DC

2.3 Teach pendant

Itm	Qty	Name	Art.no	Rem
		Complete unit	3HAB 5386-1	
		Progr.board	3HAA 3573-ABA	DSQC 301
		Display	3HAA 3101-BD	
		Membran keyboard	3HAB 2027-1	
		Joystick unit	3HAA 3001-22	
		3-mode switch	3HAB 2105-1	
		EM stop, button	3HAB 5171-1	
		Contact block	3HAB 5171-10	
		Connection cable	3HAB 5388-1	10 m
		Extension cable	3HAA 3560-LXA	10 m
		Shelf for teach pendant	3HAA 3560-GSA	

2.4 Contactor unit

Itm	Qty	Name	Art.no	Rem
KM1,2	2	Contactor	3HAA 3003-19	MOTORS ON
KM3	1	Contactor	3HAB 2425-1	Supervision
KM4	1	Contactor	3HAA 3001-4	Brake
AP60	1	Component unit	3HAB 2989-1	Varistors, diodes

2.5 Computer system

Itm	Qty	Name	Art.no.	Rem
AP33	1	DSQC 326 DSQC 335	3HAB 2242-1 3HAB 6182-1	Robot CPU Robot CPU, RW 2.0
AP31	1	DSQC 316 DSQC 325	3HAB 2219-1 3HAB 2241-1	Main CPU Main CPU, RW 2.0
GS1	1	DSQC 258	3HAA 3563-AUA	Power sup.
AP41	1	DSQC 256A	3HAB 2211-1	Sys. board
AP80	1	DSQC 302	3HAA 3573-ACA	Rear plane, I/O
AP81	1	DSQC 307	3HAA 3573-AJA	Rear plane VME
AP32	1	DSQC 324	3HAB 5957-1	Memory, 16 Mb
AP32	1	DSQC 323	3HAB 5956-1	Memory, 8 Mb
AP32	1	DSQC 317	3HAB 2220-1	Memory, 6Mb
AP32	1	DSQC 321	3HAB 2236-1	Memory, 4Mb

2.6 Drive system

Itm	Qty	Name	Art.no	Rem
AP1-3	3	DSQC 236 T	YB 560 103-CE	Servo power unit, ax. 1-3
AP4-6	3	DSQC 236 G	YB 560 103-CD	Servo power unit, axis 4-6
AP7	1 1	DSQC 236 C or/ DSQC 236 T	YB 560 103-CC or/ YB 560 103-CE	Servo power unit, axis 7
AP9	1	DSQC 314 B	3HAB 2216-1	Rectifier
AP10	1	DSQC 25~~7~~5	3HAA 3563-A~~T~~RA	Rear plane SEE RS1 9622
EV1-3	3	Fan	6480 096-5	24 V DC

2.7 Optional units

Itm	Qty	Name	Art.no	Rem
AP11-16	≤6	Digital I /O, DSQC 223	YB 560 103-BD	16 in/16 out, 24V DC
		Cable	3HAB 2003-1	External conn.
		Cable	2639 0351-LA	To connection unit
XT11-16		Connection unit	3HAA 3003-33	Screw terminals
		Connection unit, relay	3HAB 2067-1	Screw terminals
AP11	≤1	Analog I/O, DSQC 209	YB 560 103-AL	3 outputs ±10V 1 output ±20mA 4 inputs 0 - ±10V
		Cable	3HAB 2004-1	External connection
		Cable	3HAB 2125-1	To connection unit
AP11	≤1	Combi I/O, DSQC 315	3HAB 2214-1	16 in/16 out 24 V DC 2 out 0-10 V
		Cable	3HAB 2005-1	External connections
		Cable	3HAB 2128-1	To connection unit
APxx	≤1	Remote I/O, DSQC 239	YB 560 103-CH	
		Cable	3HAB 2543-1	
		DSQC 259	3HAB 2205-1	Noise suppression board
XT10,11	2	Connection unit	3HAA 3003-33	Screw terminals

EV4	Cooling device Dust filter (cool dev.)	3HAA 3003-57 7820 004-3	 Package with 3
	External operator's panel	3HAB 2140-1	
	External axes board	YB 560 103-BS	DSQC 233
FC1	Contactor	3HAA 3001-4	Cooling axis 1
FC2	Timmer block	3HAB 6202-1	Cooling axis 1
(KM4)	Contact block	3HAB 5877-1	Cooling axis 1

2.8 Miscellaneous

Itm	Qty	Name	Art.no	Rem
	2	Battery	3HAB 2038-1	RWM
SB1,2,3		Micro switch	5397 038-1	For fan, cool device.
Z2		Varistor board, DSQC 232	YB 560 103-CF	
XS1,3,4,5		Industrial connector	5217 687-25	Female insert 64-pole
		Cable, measurement Cable, motor	3HAB 2678-1 3HAB 2684-1	7 m 7 m
		Cable, measurement	3HAB 2682-1	7 m, metal braid protection
		Cable, motor	3HAB 2688-1	7 m, metal braid protection
		Cable, measurement Cable, motor	3HAB 2679-1 3HAB 2685-1	15 m 15 m
		Cable, measurement	3HAB 2683-1	15 m, metal braid protection
		Cable, motor	3HAB 2689-1	15 m, metal braid protection
		Cable, measurement Cable, motor	3HAB 2680-1 3HAB 2686-1	22 m 22 m
		Cable, measurement Cable, motor	3HAB 2681-1 3HAB 2687-1	30 m 30 m
XT5 XT6		Costumer cable, signal Costumer cable, power	3HAA 3560-NJA 3HAA 3560-NNA	7 m 7 m
		Costumer cable, signal	3HAB 3560-NVA	7 m, metal braid protection

	Customer cable, power	3HAB 3560-NXA	7 m, metal braid protection
XT5	Costumer cable, signal	3HAA 3560-NKA	15 m
XT6	Costumer cable, power	3HAA 3560-NPA	15 m
	Customer cable, signal	3HAB 3560-NWA	15 m, metal braid protection
	Customer cable, power	3HAB 3560-NYA	15 m, metal braid protection
XT5	Costumer cable, signal	3HAA 3560-NLA	22 m
XT6	Costumer cable, power	3HAA 3560-NRA	22 m
XT5	Costumer cable, signal	3HAA 3560-NMA	30 m
XT6	Costumer cable, power	3HAA 3560-NSA	30 m
EV4	Fan, transformer cooling	6480 096-5	24 V DC
	Filter cartridge	3HAB 2780-1	